Mesa Standard Details & Specifications

Amendments to MAG Uniform Standard Details & Specifications for Public Works Construction

mesa·az

ENGINEERING

2015

MESA STANDARD DETAILS
AVAILABLE ON-LINE
WWW.MESAAZ.GOV/ENGINEERING

EFFECTIVE DATE April 8, 2015

2015 City of Mesa Amendments to MAG Specifications and Standard Details Revisions

Spec/Detail	Name	Change(s)
General	SPECIFICATIONS	Minor spelling and typo edits
Subsection 106.2	SAMPLES AND TESTS OF MATERIALS	Revised to delineate Quality Control and Quality Assurance testing requirements
Subsection 107.11	CONTRACTOR'S RESPONSIBILITY FOR UTILITY AND SERVICES	Revised to add Underground Damage Prevention & Safety training requirements
Section 321	PLACEMENT AND CONSTRUCTION OF ASPHALT CONCRETE PAVEMENT	Revised to align more closely with East Valley Asphalt Committee criteria
Subsection 321.8.4	COMPACTION: ASPHALT BASE COURSE AND SURFACE COURSE	Revised to restrict minimum temperature for compaction
Subsection 340.3.9	TOLERANCES	Minor text edits
Subsection 340.3.10	DEFICIENCIES	Revised deficiencies
Section 610	WATER LINE CONSTRUCTION	Minor renumbering of subsections to correspond to new MAG numbering
Subsection 610.3	MATERIALS	Revised allowable materials
Subsection 610.6.2	MATERIALS	Revised allowable materials

Subsection 610.7	VALVES	Minor text change
Subsection 610.10	COUPLINGS, JOINTS, GASKETS, AND FLANGES	Revised allowable materials and minor text changes.
Subsection 610.15.1	CORROSION MONITORING TEST STATIONS	Revised subsection title. Revised Materials and Construction Methods section and Field Tests section.
Subsection 610.16	MEASUREMENT AND PAYMENT	Minor text edits
Subsection 611.2	DISINFECTING WATER MAINS	Revised disinfection requirements
Subsection 611.4	POST INSTALLATION INSPECTION OF NEW MAINLINE STORM DRAINS	Added subsection (C) Video Inspection of Storm Drain Mainlines
Subsection 615.2	MATERIALS	Added ductile iron pipe requirements
Subsection 630.3.1	General	Minor text changes and revised subsections (C) and (D)
Subsection 630.4.2(A)(2)(a)	CAST IRON	DELETED
Subsection 630.4.2(B)	TAPPING SLEEVES	Added reference to Approved Products List
Subsection 630.5(B)	BUTTERFLY VALVES 3 INCHES THROUGH 12 INCHES	DELETED
Subsection 631.3.5	SERVICE TAPS	Added reference to Approved Products List
Subsection 750.1	CAST IRON WATER PIPE	DELETED
Subsection 750.3	JOINT REQUIREMENTS	Minor text changes
Subsection 750.4	FITTINGS	Deleted references to gray iron and added reference to Approved Products List
Section 752	ASBESTOS –CEMENT WATER PIPE AND FITTINGS	DELETED
Section 758	CONCRETE PRESSURE PIPE – STEEL CYLINDER TYPE	Deleted references to AWWA C301, prestressed concrete pressure pipe

SPECIAL NOTICE	SPECIAL NOTICE REGARDING TECHNICAL SPECIFICATIONS FOR RUBBERIZED ASPHALTIC CONCRETE PAVEMENT	Replaced materials specification with reference to East Valley Asphalt Committee criteria
SPECIAL NOTICE	SPECIAL NOTICE REGARDING REQUIRED DETAILED SHOP DRAWINGS FOR SPECIALTY ITEMS	New section
M-1.01	SHEET INDEX TO MESA STANDARD DETAILS	Updated
M-1.02	SHEET INDEX CONTINUED	Updated
M-1.03	SHEET INDEX CONTINUED	Updated
M-1.04	SHEET INDEX CONTINUED	Updated
M-1.05	SHEET INDEX CONTINUED	Updated
M-1.06	SHEET INDEX CONTINUED	Updated
M-1.07	SHEET INDEX CONTINUED	Updated
M-15.02	14' AND 22' SPEED HUMP SPECIFICATIONS	Modified note 6 -two weeks
M-15.03	SPEED CUSHION SPECIFICATIONS - 34' STREET	Added note 6
M-15.04	SPEED CUSHION SPECIFICATIONS - 40' STREET	Added note 6
M-15.05	SPEED CUSHION SPECIFICATIONS - 44' STREET	Added note 6
M-15.06	SPEED CUSHION SPECIFICATIONS - 48' STREET	Added note 6
M-18	ENGINEERED UTILITY BORES PERPENDICULAR TO CENTERLINE OF STREET	Format changes. Modified note 2.
M-18.01	ENGINEERED UTILITY BORES PARALLEL TO CENTERLINE OF STREET	Format changes. Modified note 2.

M-18.03	POTHOLE REPAIR DETAIL	Format changes. Add crack seal callout.
M-19.01	TYPICAL STREET SECTION	Updated notes, table and section
M-19.02	TYPICAL PARTIAL STREET CROSS SECTION	Updated notes
M-19.03	SUBURBAN RANCH STREET SECTION	Updated callouts
M-19.04.1	STANDARD TRENCH BACKFILL DETAIL ARTERIAL, COLLECTOR & LOCAL	Updated callouts
M-19.04.2	STANDARD TRENCH BACKFILL DETAIL - NOTES	Modified note 6.
M-21.03	STREET NAME SIGNS, ARTERIAL / COLLECTOR TO LOCAL	Added Cul de sac. Modified note 3.
M-21.04	STREET NAME SIGNS, LOCAL TO LOCAL	Added Cul de sac. Modified note 3.
M-22.02	SIGN INSTALLATIONS ON STREET LIGHT POLES	Modified Sign labels
M-22.03	TYPICAL STREET NAME SIGN INSTALLATION LOCATION	Labeled public street. Added note 5.
M-23.03	VARIOUS SIGN INSTALLATIONS	Added reference to roundabout signs and clarified mounting height. Added note 6.
M-26	SUBTRACTIVE METER	Text leader trim
M-27.01.1	FIRE-RATED WATER METER ASSEMBLY, 4" AND LARGER	Modified notes, callouts, and thrust block.
M-27.01.2	FIRE-RATED WATER METER ASSEMBLY, 4" AND LARGER - NOTES	Modified notes
M-27.02.1	MANIFOLDED 6" WATER METER ASSEMBLY	Modified notes, callouts, and thrust block
M-27.02.2	MANIFOLDED 6" WATER METER ASSEMBLY - NOTES	Modified notes
M-28.01.1	NON-FIRE-RATED WATER METER ASSEMBLY, 4" AND 6"	Modified notes, callouts, and thrust block

M-28.01.2	NON-FIRE-RATED WATER METER ASSEMBLY, 4" AND 6" - NOTES	Modified notes
M-28.02	PARALLEL 2” WATER METERS FOR 3” WATER SERVICES	Added note 8 and callout for valve tag
M-29	1 1/2" & 2" APPROVED WATER METERS	Modified callouts
M-31.01	REDUCED PRESSURE PRINCIPLE BACKFLOW PREVENTION ASSEMBLY, 2 1/2" AND LARGER	Updated list of materials. Modified thrust block and callouts.
M-31.02	DOUBLE CHECK VALVE BACKFLOW PREVENTION ASSEMBLY, 2 1/2" AND LARGER	Updated list of materials. Modified thrust block and callouts.
M-31.07	FIRE LINES TO PRIVATE PROPERTY	Updated notes
M-38.02	AIR/VACUUM RELEASE VALVE - 4" & 6"	Revised notes and callouts
M-42	COMMERCIAL, INDUSTRIAL AND APARTMENT DRIVEWAY DETAIL - DETACHED SIDEWALK	Text leader trim
M-44.05	SIDEWALK RAMPS - TYPE D	Modified pedestrian signal pole push button location
M-45.01.1	BUS PULLOUT DETAIL	Change detail number. Revised plan view, note 5 and note 9.
M-45.01.2	BUS PULLOUT DETAIL – ALTERNATE LOCATION	New detail
M-45.02.1	STANDARD BUS SHELTER - FLOOR PLAN	Modified concrete pad size
M-45.02.2	STANDARD BUS SHELTER - ROOF PLAN	
M-45.02.3	STANDARD BUS SHELTER - ELEVATIONS AND NOTES	Deleted note 9. Revised callouts.
M-45.03.1	STANDARD BUS SHELTER - STRUCTURAL DETAILS	Text revision and Leader breaks
M-45.03.2	STANDARD BUS SHELTER - STRUCTURAL DETAILS	Text style and size
M-45.03.3	STANDARD BUS SHELTER - STRUCTURAL DETAILS	Text revision and Leader placement

M-45.04.1	STANDARD BUS SHELTER - ROOF & FRAME SECTIONS	Split into two sheets
M-45.04.2	STANDARD BUS SHELTER - ROOF & FRAME SECTIONS	Split into two sheets. Deleted transit information callout.
M-45.05.1	STANDARD BUS SHELTER - MISCELLANEOUS DETAILS	Split into two sheets
M-45.05.2	STANDARD BUS SHELTER - MISCELLANEOUS DETAILS	Split into two sheets
M-45.06	STANDARD BUS SHELTER - SUN SCREEN DETAILS	
M-45.07.1	STANDARD BUS SHELTER - SUN SCREEN DETAILS	Split into four sheets
M-45.07.2	STANDARD BUS SHELTER - SUN SCREEN DETAILS	Split into four sheets
M-45.07.3	STANDARD BUS SHELTER - SUN SCREEN DETAILS	Split into four sheets
M-45.07.4	STANDARD BUS SHELTER - SUN SCREEN DETAILS	Split into four sheets
M-45.08	BUS STOP PAD DETAIL	Modified bus sign orientation and location
M-47.01	RIGHT TURN LANE TREATMENTS	Modify "right lane" plaque location.
M-47.02	RIGHT TURN TRAP LANE TREATMENTS	Modify "right lane" plaque location. Modify note 6. Modify Warning Sign designation.
M-47.05	TYPICAL BIKE LANE LAYOUTS	Add note 6.
M-49.01	WATER SERVICE INSTALLATION	Revised note 2.
M-49.02	WATER SERVICE INSTALLATION MATERIALS LIST	Revised note 3. Added note 9.
M-49.03	SINGLE AND MANIFOLD WATER METER INSTALLATIONS	Text size and style
M-50	WATER LINE CUT AND PLUB FOR 12” DIAMETER MAIN AND SMALLER	Modified detail line weight

M-51	WATER VALVE ABANDONMENT	Revised existing valve callout.
M-52	ACP TO DIP TEE CUT IN	Notes text spacing
M-53	WATER & SEWER SERVICE STANDARDS FOR RESIDENTIAL SMALL LOT/MULTI-LOT PRIVATE DRIVE DEVELOPMENTS	Notes text spacing
M-55	STEEL CASING PIPE INSTALLATION DETAIL FOR WATER MAINS	New detail
M-58	JOINT USE WATER AND GAS TRENT DETAIL	Modified text leader, detail line weight
M-60	TYPICAL UTILITY CROSSINGS	Modified text size and style
M-61	DELINEATOR	Revised hatch
M-62.01	STANDARDS FOR SOLID WASTE VEHICLE ACCESS	Revised vehicle dimensions
M-62.02.2	SINGLE AND DOUBLE-WIDE BIN ENCLOSURES - NOTES	Revised note 8
M-62.03	TRIPLE-WIDE BIN ENCLOSURES	Revised notes
M-62.06	RESIDENTIAL SOLID WASTE GUIDELINES	Revised notes
M-62.07	LARGE COMPACTOR REFUSE AREA	Added note 14
M-66.01	FIBER OPTIC MANHOLE	Minor changes.
M-66.02	FIBER OPTIC MANHOLE FRAME AND COVER	Added note 5. Changed hinged manhole cover label. Modified cast manhole cover dimension.
M-66.03	FIBER OPTIC TEST POINT DETAIL	Modified entire detail
M-66.04	FIBER OPTIC VAULT/MANHOLE KNOCKOUT DETAIL	Modified callouts, added notes
M-66.05	HORIZONTAL COILED FIBER OPTIC CABLE & SPLICE CLOSURE RACKING	Revised detail name. Modified callouts, added notes.

M-66.06	VERTICAL COILED FIBER OPTIC CABLE & SPLICE CLOSURE RACKING	Revised detail name. Modified callouts, added notes
M-66.07.1	STANDARD FIBER OPTIC CABLE INSTALLATION PULL BOX	New detail number, modified detail
M-66.07.1	STANDARD FIBER OPTIC CABLE INSTALLATION PULL BOX	New detail
M-66.08.1	MICRODUCT INSTALLATION PULL BOXES	New detail number, modified detail
M-66.08.2	MICRODUCT INSTALLATION PULL BOXES	New detail
M-66.09.1	STANDARD FIBER OPTIC TRENCHING AND DUCT BANK INSTALLATION	New detail number, modified detail
M-66.09.2	STANDARD FIBER OPTIC TRENCHING AND DUCT BANK CONFIGURATIONS	New detail
M-66.10.1	BUNDLED MICRODUCT CONDUIT INSTALLATION	New detail number, modified detail
M-66.10.1	STANDARD BUNDLED MICRODUCT CONFIGURATION	New detail
M-66.12	FIBER OPTIC CABLE SPOOL LENGTH PER JUNCTION STRUCTURE	New detail
M-70	STREETLIGHT WORK PROCEDURES	Modified notes 2, 12 & 28. Added note 30.
M-70.01.2	STREETLIGHT LUMINAIRE SPECIFICATION	Added note I
M-70.02.2	TOWN CENTER DECORATIVE	Added note L
M-70.03.2	TOWN CENTER DECORATIVE STREETLIGHT LUMINAIRE SPECIFICATION	Added note M
M-73.01.1	STEPPED STREETLIGHT POLE SPECIFICATION	Modified pole centerlines
M-73.01.2	STEPPED STREETLIGHT POLE SPECIFICATION	Reformatted notes. Revised detail name.
M-73.01.3	STEPPED STREETLIGHT POLE SPECIFICATION	Revised detail name

M-73.02.1	TAPERED STREETLIGHT POLE SPECIFICATION	Revised detail name
M-73.02.2	TAPERED STREETLIGHT POLE SPECIFICATION	Reformatted notes. Revised detail name.
M-73.02.3	TAPERED STREETLIGHT POLE SPECIFICATION	Revised detail name
M-73.03.1	DAVIT STREETLIGHT POLE SPECIFICATION	Reformatted notes. Revised detail name.
M-73.03.2	DAVIT STREETLIGHT POLE SPECIFICATION	Reformatted notes. Revised detail name.
M-73.03.3	DAVIT STREETLIGHT POLE SPECIFICATION	Reformatted notes. Revised detail name.
M-73.04.1C	SQUARE STREETLIGHT POLE SPECIFICATION	Revised detail name.
M-73.04.3	FOUNDATION DETAIL FOR ASU BANNER POLE (P-421)	Minor changes
M-73.06.1	ANCHOR BOLT & COPPER GROUNDING PLATE SPECIFICATION	Modified Data Table. Added "See Data Table" to callouts
M-73.07	CURRENT CARRYING AND GROUNDING SPECIFICATION	Modified Residential Grounding Detail Note.
M-75.01.1A	C-103 LIGHTING CONTROL CABINET SPECIFICATION	Added "reference only" callout
M-75.01.1B	C-103 WIRING DIAGRAM	Revised note 7
M-75.01.1C	C-103 CABINET REQUIREMENTS	Added "reference only" callout
M-75.01.2C	C-113 WIRING DIAGRAM	Revised note 7
M-75.03	240V SINGLE PHASE SERVICE POD / POS LCC & GROUNDING	Minor changes
M-75.04	120V SINGLE PHASE SERVICE POD / POS & GROUNDING	Modified Note 8. Modified a callout.
M-76.01	STREETLIGHT FOUNDATION SPECIFICATION	Minor changes

M-76.02	STREETLIGHT FOUNDATION SPECIFICATION	Modified note 5. Detail line weight.
M-85.01	OUTDOOR CONVENIENCE RECEPTACLE SPECIFICATION	Added front and side views
M-90.01	ITS/TRAFFIC SIGNAL GENERAL NOTES I	Revised notes
M-90.02	ITS/TRAFFIC SIGNAL GENERAL NOTES II	Revised notes
M-90.03	ITS/TRAFFIC SIGNAL GENERAL NOTES III	Revised notes
M-90.04	TRAFFIC SIGNAL CONSTRUCTION PROCEDURES I	Revised notes
M-90.05	TRAFFIC SIGNAL CONSTRUCTION PROCEDURES II	Revised notes
M-91.01	TRAFFIC SIGNAL FULLY METERED SERVICE PEDESTAL	Minor changes
M-92.01	TRAFFIC SIGNAL CABINET FOUNDATION	Added callout for scribing in the concrete near the spare conduit to denote direction . Minor changes
M-92.03	POLE, PULL BOX & FOUNDATION GROUNDING	Added callout. Modified wiring diagram for Pole Grounding Detail
M-93.01	TRAFFIC SIGNAL PULL BOX INSTALLATION	Added new general note 7
M-94.06	TRAFFIC SIGNAL POLE NOTES	Revised text for note 12 to be bold
M-94.09	3- ANTENNA CLAMP ASSEMBLY FOR 65’ ITS POLE	Added Antenna Clamp 4 Way drawing to detail
M-94.10	TRAFFIC SIGNAL MAST ARM PELCO MOUNT	Corrected a measurement error
M-95.02	SIGNAL HEAD ASSEMBLY	Revised signal head body washer callout
M-95.03	TYPE "S" CLUSTER HEAD	Revised notes
M-95.06	PEDESTRIAN PUSH BUTTON STATION	Revised notes 4 and 7

M-95.10	CCTV CAMERA INSTALLATION DETAIL	Modified detail to show new installation for 360-deg camera
M-95.11	VARIOUS COMMUNICATION DEVICE INSTALLATION DETAILS	New detail
M-96.01	DETECTOR LOOP INSTALLATION DETAILS	Revised notation on Detail A to reflect correct detail reference
M-96.05	VIDEO DETECTION CAMERA INSTALLATION	Revised notes 1 and 2. Added note 6. Modified VDS installation detail to add cable.
M-97.02	GENERAL CABLE AND WIRING NOTES	Added note 11
M-97.05	25 CONDUCTOR CABLE #1 & #2 GENERAL NOTES	Combined note 5 and note 11 to become modified note 10.
M-97.06	CONDUCTORS IN TRAFFIC SIGNAL POLES	Added “Hawk” to the wiring detail
M-99.01	PUSH BUTTON STATION SIGN	Corrected a spelling error
M-102	SURFACE SELECT GRANITE BOULDER	Added callouts and note 4
M-103.02	TREE PLANTING DETAIL IN TURF AREAS	Added patterning. Revised incomplete callout.
M-103.03	TREE PLANTING IN DECOMPOSED GRANITE AREAS	Added patterning. Revised incomplete callout.
M-103.04	TREE PLANTING ON SLOPE	Added patterning. Revised callouts.
M-103.05	ACCENT SHRUB PLANTING DETAIL	Added patterning. Revised D.G. placement.
M-103.06	SHRUB PLANTING DETAIL	Added patterning. Revised D.G. placement.
M-104.02	SCHEMATIC IRRIGATION LAYOUT - BATTERY IRRIGATION CONTROLLER	Revised callout references
M-104.03	SCHEMATIC IRRIGATION LAYOUT - IRRIGATION WITH FLOW CONTROL	Revised callout references
M-104.04	SCHEMATIC IRRIGATION LAYOUT - STANDARD CONTROLLER WITHOUT FLOW CONTROL	Revised callout references

M-104.05	SCHEMATIC IRRIGATION LAYOUT - MOTOROLA CONTROLLER	Revised callout references
M-104.06	ALEX-TRONIX CONTROLLER AND ENCLOSURE	Deleted note 2
M-106.02	TYPICAL THRUST BLOCK DETAILS	Added note 2. Revised detail name.
M-111.06	TYPICAL WALKWAY WITH 4" IRRIGATION TILES - FLOOD IRRIGATION APPLICATION	Added patterning. Revised compaction callout.
M-111.07	DECOMPOSED GRANITE AT CONCRETE	Added patterning. Revised compaction callout.
M-111.08	12" CONCRETE HEADER CURB DETAIL	Added patterning. Revised compaction callout.
M-111.10	PLAYGROUND ADA ACCESS RAMP	New detail

Mesa Standard Specifications

Amendments to MAG Uniform Standard Specifications for Public Works Construction

mesa·az

ENGINEERING

2015

MESA STANDARD DETAILS
AVAILABLE ON-LINE
WWW.MESAAZ.GOV/ENGINEERING

EFFECTIVE DATE April 8, 2015

CITY OF MESA
MESA, ARIZONA

STANDARD SPECIFICATIONS
FOR PUBLIC WORKS CONSTRUCTION

The City of Mesa Standard Specifications for Public Works Construction shall be in accordance with the 2015 edition of the Uniform Standard Specifications for Public Works Construction as sponsored by the Maricopa Association of Governments (www.mag.maricopa.gov), as amended as follows:

A. Subsection 102.12 – Add a new paragraph (C), to read as follows:

(C) Submission of any unit prices in the bid proposal which are unbalanced, either above or below the amount of a reasonable bid price as determined by the City Engineer, to the potential detriment of the contracting agency.

B. Subsection 105.4 – Add the following to this section:

For any apparent error or omission in the plans and specifications, such corrections by the Engineer may include adjustments in units, quantities and unit prices.

C. Subsection 106.2 - Replace the text of Subsection 106.2 with the following text:

106.2.1 General:

The City of Mesa requires that all construction materials to be supplied, constructed or installed in, on or across any City of Mesa easement, right-of-way or City-owned property be subject to inspection, quality control (QC) & quality assurance (QA) testing, and approval or rejection by the City. This requirement also applies to any materials or infrastructure that, once in-place, will be owned, operated or maintained by the City of Mesa, regardless of where they are installed. Any material rejected by the City of Mesa shall be removed immediately and replaced in an acceptable manner to the City at no additional cost to the City.

“Quality Control (QC) Testing” is testing performed to assure the materials installed comply with the requirements set forth in City standards and the Contract Documents.

“Quality Assurance (QA) Testing” is testing performed to verify the accuracy and applicability of the QC testing results and to ascertain that the materials installed meet the specified levels of quality in accordance with City standards and the Contract Documents.

For City of Mesa projects (where the City of Mesa is the Contracting Agency), the General Contractor employed by the City shall be responsible for performing the QC testing as part of the Contract Work. For projects where the City of Mesa is not the Contracting Agency (“non-City projects”), the person or entity holding the City of Mesa permit for the work (“Permittee”) is responsible for completing the requirements set forth herein, as a condition of the permit. For “non-City projects”, the verbiage of this section presumes that the Permittee either is the General Contractor performing the permit work or that the Permittee will contractually pass the QC testing responsibility on to the Permittee’s General Contractor. Hence, the word “Contractor” is used throughout this section when speaking of the entity responsible for QC testing requirements. It shall be understood, however, that for “non-City projects” these responsibilities are ultimately incumbent on the permit holder.

Requirements related to minimum QC testing, including required minimum testing frequencies, are set forth herein. The City may also elect to perform independent QA testing for any project or permit. The City will typically perform QA testing at a frequency of approximately one QA sample for every four QC samples. However, the City may deviate from this frequency (either to increase or decrease it) at the City’s own discretion.

The Contractor (whether the City's Contractor or the Permittee's Contractor) shall provide all support necessary to perform QC and QA testing and sampling (i.e. shoring for testing, trench, backfill, backhoes, motor graders, loaders, etc. to facilitate testing and sampling) at no additional cost to the City.

106.2.2 Quality Control Testing Program Requirements:

The Contractor shall establish, provide, and maintain an effective Quality Control Testing Program (QCTP). The Contractor shall develop his own program or procure the services of a consultant. In either case, the party performing the tests shall be currently certified by the National Bureau of Standards in the National Voluntary Laboratory Accreditation Program (NVLAP) for construction services or the AASHTO Accreditation Plan (AAP) for Soils, Asphalt and Concrete.

All testing shall be under the direction of a Professional Engineer registered in the State of Arizona, knowledgeable in Materials Testing. All test reports and forms shall be stamped by the Engineer.

All personnel performing materials sampling, collection and/or testing shall be proficient in their assigned duties and possess certification(s) commensurate with their position and responsibilities. The minimum certification(s) for each technician shall be NICET Level II, Arizona Technical Testing Institute, American Concrete Institute, or other nationally recognized program applicable to the project and approved by the City of Mesa. All personnel performing field testing or sampling shall carry copies of their certifications with them in the field and shall produce them upon request from the City Inspector. Failure to produce acceptable documentation of proper certification by either field personnel or the laboratory may be grounds for the City to reject testing or sampling done by that individual or firm.

Prior to the start of any construction, the Contractor shall give the City Inspector a schedule of the proposed testing and the name of the laboratory that will perform the work, along with evidence of the required certifications required herein. If the proposed schedule, laboratory or personnel are deficient, the City will notify the Contractor and work may not proceed until the deficiency is corrected.

At any point during the project, if the City determines that the QC activities do not comply with the requirements set forth herein, the City may:

(1) Order the Contractor to replace ineffective or unqualified quality control personnel.

(2) Order the Contractor to stop operations until appropriate corrective action is taken.

106.2.3 Additional Written QCTP Document Required for City of Mesa Projects:

The additional requirements of this subsection (106.2.3) apply only to projects where the City of Mesa is the Contracting Agency. For such projects, the Contractor shall prepare a written QCTP and shall submit it to the City as a required submittal. The Contractor shall not begin work until the QCTP has been reviewed and accepted by the City. Resumes of all personnel that will be associated directly or indirectly with the QCTP shall be included in the QCTP. The written QCTP shall include, but not be limited to, on-site/field and laboratory testing of all material delivered to the site and any existing materials or conditions pertinent to the project. The written QCTP shall include a description of the required field and construction materials laboratory tests, including required frequencies that meet the minimums established herein. The responsibilities of the engineer, project manager, supervisory personnel and each technician assigned to this project shall be included in the written QCTP. Substitutions or replacement of personnel shall require prior written approval by the City.

106.2.4 Reporting Requirements:

The Contractor shall establish a system acceptable to the City to record and report all material test results. The daily test reports shall include but not be limited to:

1. Test designation
2. Date of test
3. Name of tester

4. Location of test/sample (station and offset)
5. Product suppliers and project codes (as applicable)
5. Depth/elevation of test/sample
6. Test result
7. Control requirement(s)
8. Cause of rejection (if applicable)
9. Results of retests (if applicable)
10. Remedial action (if applicable)

The Contractor shall submit test results to the City as soon as they are available (daily) by emailing them to the City Inspector at his/her official City email address and also emailing them to mat.lab@mesaaz.gov.

The Contractor shall also submit a weekly report to the City summarizing the testing and construction activities completed by emailing the report to the email addresses noted above. All weekly reports shall be submitted simultaneously to the Contractor, Permittee (if applicable) and City. The report shall include individual summary sheets for each utility line, structure and portion of the pavement section. Cores shall be numbered sequentially throughout the Project. Re-cores shall reference the original core by number and will contain the averaged values for thickness and density. Total pavement thickness shall be reported**.** Vertical location of tests for underground utilities shall indicate the depth of the excavation at the location of the test (i.e., cut to flow line [if applicable], depth to bottom or top of pipe, etc.) Density tests shall be numbered sequentially. If the minimum number of tests has not been performed per the QCTP, this shall be stated in the weekly summary report with an explanation of the circumstances. The City will maintain a copy of the test results and weekly reports in the City's electronic files.

In addition to providing electronic copies of materials testing at intervals as cited above, the Contractor or Permittee shall provide the City with two bound, hard copies of the test results showing the results of all of the testing completed for the permit or project. This shall be provided to the City prior to the request for Final Inspection. The Final Inspection will not be scheduled until such bound report has been received and verified by the City Inspector. The following information shall be included in the bound packets:

1. A cover letter shall be included that states that it is the registrant's opinion that the material testing has been performed in accordance with the City's latest minimum schedule of testing, that the materials were found to be in conformance with the applicable specifications, and that the tests were performed in accordance with the applicable ASTM and AASHTO procedures. The letter or the report as a whole shall bear the registrant's seal.

2. All pages shall be sequentially numbered and a table of contents shall be provided.

3. Hard copies of all of the test results completed to-date for the project shall be included in the report, reporting at least the minimum amount of information for each test as set forth in this section.

106.2.5 Required Minimum QC Testing Frequencies:

Although minimum testing frequencies are specified herein, the Contractor and Permittee (if applicable) shall bear full responsibility for the quality of the materials and installation and may elect to perform additional testing beyond the requirements set forth herein to ensure compliance.

The following table shall be used to determine the minimum frequency and types of tests that are required under the Contractor's QCTP:

Test	Method (AASHTO unless otherwise noted) Most Recent Version	Frequency
STREET SUBGRADE		
Sieve Analysis	T311	1 per soil type
Moisture Density Relationship	T99 & T224	1 per soil type
In-Place Density	T191(sandcone) or T310 (nuke) (note 8)	1 per 250 linear feet per traffic lane or portion thereof (notes 1 & 4)
CURB & GUTTER SUBGRADE OR SIDEWALK SUBGRADE		
Sieve Analysis	T311	1 per soil type
Moisture Density Relationship	T99 & T224	1 per soil type
In-Place Density	T191(sandcone) or T310 (nuke) (note 8)	1 per 250 linear feet or portion thereof (notes 1 & 4)
STRUCTURE FOUNDATION – SUBGRADE (if required)		
Sieve Analysis	T311	1 per soil type
Moisture Density Relationship	T99 & T224	1 per soil type
In-Place Density	T191(sandcone) or T310 (nuke) (note 8)	1 per 250 square feet (if required) (notes 1 & 4)
STRUCTURAL BACKFILL		
Sieve Analysis	T311	1 per soil type
Moisture Density Relationship	T99 & T224	1 per soil type
In-Place Density	T191(sandcone) or T310 (nuke) (note 8)	1 per 1,000 cubic feet or per 2-feet of lift thickness, whichever is greater (notes 1 & 4)
EMBANKMENT		
Sieve Analysis	T311	1 per soil type
Moisture Density Relationship	T99 & T224	1 per soil type
In-Place Density	T191(sandcone) or T310 (nuke) (note 8)	1 per 250 linear feet per traffic lane per 12 inches of depth or portion thereof (notes 1 & 4)
TRENCH BACKFILL		
Sieve Analysis	T311	1 per soil type
Moisture Density Relationship	T99 & T224	1 per soil type
In-Place Density	T191(sandcone) or T310 (nuke) (note 8)	1 per 250 linear feet per 2 feet of depth or portion thereof (notes 1, 3, & 4)
AGGREGATE BASE COURSE		
Sieve Analysis	T27	1 per source per each day's delivery
Plasticity Index	T146, T89 & T90	1 per source per each day's delivery

Moisture Density Relationship	T 99 & T224	1 per source
In-Place Density	T191(sandcone) or T310 (nuke) (note 8)	1 per 500 linear feet per traffic lane (notes 1 & 4)
RESIDENTIAL, ARTERIAL, & RUBBERIZED ASPHALTIC CONCRETE		
Ignition Furnace Binder Calibration	T308	1 per mix design per project (note 6)
ARTERIAL ASPHALTIC CONCRETE		
Asphalt Binder Content	T308	1 per each day's paving or 500 tons whichever is greater
Percent *In-Lab* Air Voids @ Ndes	T269	1 per each day's paving or 500 tons whichever is greater
Theoretical Max Specific Gravity (Rice)	T209	1 per each day's paving or 500 tons whichever is greater
Gyratory Density	T312	1 per each day's paving or 500 tons whichever is greater
Sieve Analysis	T30	1 per each day's paving or 500 tons whichever is greater
Percent *In-Place* Air Voids	T269	1 per 1,000 linear feet per traffic lane or 1 per each day's paving, whichever is greater (notes 5 & 7)
RESIDENTIAL & RUBBERIZED ASPHALTIC CONCRETE		
Asphalt Binder Content	T308	1 per each day's paving or 500 tons whichever is greater
Percent *In-Lab* Air Voids	T269	1 per each day's paving or 500 tons whichever is greater
Theoretical Max Specific Gravity (Rice)	T209	1 per each day's paving or 500 tons whichever is greater
Compaction of Marshall Specimens	T245	1 per each day's paving or 500 tons whichever is greater
Sieve Analysis	T30	1 per each day's paving or 500 tons whichever is greater
Bulk Specific Gravity of Marshall Specimens	T166	1 per each day's paving or 500 tons whichever is greater
Percent *In-Place* Air Voids	T269	1 per 1,000 linear feet per traffic lane or 1 per each day's paving, whichever is greater (notes 5 & 7)
PORTLAND CEMENT CONCRETE		
Sampling of Concrete	T141	1 per 50 cubic yards or per placement, whichever is greater
Temperature of Concrete	T309	1 per 50 cubic yards or per placement, whichever is greater
Slump	T119	1 per 50 cubic yards or per placement, whichever is greater

Making & Curing Concrete Specimens	T23	1 set of 4 cylinders per 50 cubic yards or per placement, whichever is greater
Compressive Strength of Concrete Specimens	T22	1 set of 4 cylinders per 50 cubic yards or per placement, whichever is greater
Percent Entrained Air Content	T152, T196, or T199	Where applicable, 1 per 50 cubic yards or per placement, whichever is greater
	GROUT	
Sampling & Testing Grout	ASTM C1019	1 per day's construction or 5,000 square feet, whichever is greater
	MORTAR	
Strength of Molded Masonry Cylinders & Cubes	ASTM C780 ANNEX A6	1 per day's construction or 5,000 square feet, whichever is greater
	DECOMPOSED GRANITE	
Sieve Analysis	T27	1 per soil type or source (note 2)
	PLAYGROUND SAND	
Sieve Analysis	T27	1 per soil type or source (note 2)

Note 1: Minimum testing frequency is based on passing tests only. Initial tests and retests that indicate noncompliance shall not be counted. The technician(s) performing the tests shall be present during the placement, moisturizing and compaction of the material. The technician(s) shall provide a written description of the contractor's activities in the compaction of the material (e.g., depth of lift, number of passes of the compactor, type of equipment used, how the material is reacting to compaction (pumping), level or sloped surface, how the fill material is tying in with previous material, etc.). The description will be included in the daily report.

Note 2: The certifications for the laboratory and technicians as discussed above will be changed as follows: The testing laboratory for landscape soil must be certified by the Western States Proficiency Testing Program. The person responsible for the testing and providing recommendations must be certified as a Professional Soil Scientist by The American Society of Agronomy.

Note 3: In-Place Density testing shall start at spring line for pipes 48 inches in diameter or less. Pipe with a diameter greater than 48 inches shall be tested in 2-foot increments from bottom of pipe. Laterals will be tested independently of the main line.

Note 4: The testing frequency stated will be the minimum required when continuous observation is performed by the Contractor's Quality Control Personnel. When Quality Control Personnel do not directly observe the construction process, the engineer has the option to stop work and/or adjust the testing frequency. Any adjustments, which result in an increase in the testing frequency and/or lost time, shall be at no additional cost to the City.

Note 5: The contractor will provide companion cored specimens at a ratio of 1:4 (one for the City to four for the contractor), subject to a minimum of one companion core for every day of paving. The City will witness the coring and reserves the option to obtain additional specimens as it deems necessary. Re-coring for deficient thickness or compaction will be performed no later than two working days after the original specimens are obtained. All cores are to be consecutively numbered without any duplication.

Note 6: Correction factors shall be established in strict accordance with AASHTO T308, Section 6.

Note 7: Cores shall be obtained according to MAG 321.14 and patched according to MAG 321.14 & MAG 708.

Note 8: For in-place density tests, the ratio of nuclear density tests to sand cone tests shall not exceed 10:1, unless otherwise approved by the City.

106.2.6 Failing Test Results and Referee Lab:

The lab performing QC or QA testing shall notify the City Inspector, the Contractor and the Permittee (if applicable) immediately if the lab determines that the material being tested is not in conformance with the required specifications. The Contractor or

Permittee shall take corrective action and the materials shall be retested by the same testing laboratory that performed the tests that indicated noncompliance.

If the QA test results are not in agreement with the QC test results, the Contractor shall have the option to retain a third party consultant for referee tests. The third party consultant shall meet the same requirements as the consultant performing the QC testing. The results of the third party shall be binding. All cost incurred by the referee testing shall be the Contractor's expense. If the Contractor elects not to retain a third party for referee testing, the City of Mesa test results will prevail.

D. Subsection 107.11 – Modify the subsection to add the following:

Underground Damage Prevention: For all projects that include underground excavation or other work that could impact City utilities, Contractor/Permitee is required to complete a 90-minute Underground Damage Prevention & Safety presentation by City's Utilities Department, prior to commencing work. This presentation includes background training on the various City utility systems, current City programs for locating and protecting existing utilities, a review of hazardous conditions specific to buried utility lines such as gas, electric, water, sewer, telecommunications, etc., and provides a forum for establishing lines of communication between appropriate City and Contractor staff prior to beginning work on the project.

At a minimum, the following Contractor/Permitee personnel shall attend this presentation and complete any required follow-up activities: Job Superintendent, Foreman, and Operator(s) from Contractor/Permitee, the same staff from the Natural Gas Subcontractor(s), and any other major Subcontractor as determined by City. This presentation is to be free of charge with no pre-set attendance limit. Contractor/Permitee is encouraged to have additional field personnel attend if possible.

Following completion of the presentation, Contractor/Permitee shall provide a letter certifying compliance with this Section to City's Engineering Inspector. To be accepted by City, Contractor Certification Letter must include the date(s) and time(s) of presentation, and the names of field personnel who attended and must specifically reference the Project Name and City Project Number or Permit Number, as applicable.

Contractor/Permitee shall attend a pre-scheduled training session as needed to accommodate the number of Contractors and schedules of upcoming projects. The training will be provided by City's Energy Resources Department at their offices or other suitable location. Contractor/Permitee personnel are responsible for their own transportation to and from the training site. Contractor/Permitee can contact the Damage Prevention Office at 480-644-6283 for assistance and to make reservations to attend a session. Information on City's Damage Prevention & Safety training is also available at http://www.mesaaz.gov/energy/, under "Energy Safety/Damage Prevention and Safety Training."

Nothing in this Section or City's Underground Damage Prevention & Safety training presentation shall be construed as replacing or superseding OSHA Regulations, Arizona State Law, and City's established policy for Contract Construction Safety, or other applicable regulations. Contractor/Permitee shall maintain and have sole responsibility for safety on the job site.

E. Subsection 108.1 – Add the following subsection:

(C) Start of Work
Work shall not start until the contract has been executed by both the contractor and the City.

F. Subsection 109.7 (A) – Replace the text of the first paragraph of the existing subsection with the following:

Contractors are advised that the City will make monthly progress payments during the course of the contract based on the Contractor's Application and Certificate of Payment together with a detailed estimate of work completed, which shall be in the form of the American Institute of Architect's (AIA's) forms G702 and G703 or City of Mesa Application for Payment form. The detailed estimate of work completed shall include all

items from the bid schedule and/or schedule of values as applicable, and shall include values for work completed previous to application, current work completed, previously stored materials, new stored materials, value of work completed, retention, value of work completed less retention, and amount due this request. The monthly payment cycle will start with the date of the notice to proceed. The City may process payments more frequently if requested by the Contractor and agreed to by the City.
The payment process functions as follows: prior to the monthly payment cycle date, the Contractor and the City's Construction Inspector shall together prepare a list of agreed upon quantities for each item of work completed and accepted during the progress payment period. The Contractor shall then submit the Application and Certificate of Payment and an invoice with the detailed estimate of work completed based on the list of agreed upon quantities to the City's Inspector for signature. The invoice shall reflect the Contractor's company name, billing information, City of Mesa project number, Project Manager information and the total amount due at time of billing. Upon receipt of these documents, the Inspector will obtain the necessary approvals and forward the Application to the appropriate City staff for payment processing. The progress payment will be processed for payment within fourteen (14) days (except final payments) after the Application for Payment has been certified and approved by the Engineer in accordance with A.R.S §34-221.

For the purpose of definition, the City's Construction Inspectors are the "owner's designated recipients" of all pay requests. If the Contractor has any questions about the payment process, please call the City's Engineering Contract Administration. Contact information will be provided at the pre-construction meeting. All other questions shall be directed to the City Inspector assigned to the contract.

When the contract nears completion and the contract proceeds approach the limit of funds approved, the City of Mesa shall pay up to the aggregate amount approved by initial award and as revised by executed change orders, less appropriate retention, if applicable. When the final adjusting/balancing change order is written and approved, the balance of contract proceeds, if any, will be released to the Contractor. This procedure is in no way intended to delay or reduce the Contractor's right to final payment, as set forth in ARS §34-221.

Note: The remaining paragraphs of the existing subsection shall remain as written.

G. Subsection 109.8 – Add a new subsection 109.8.4, to read as follows:

109.8.4 Delays and Damages Policy:

The Contractor is advised that the City of Mesa has established a written Policy Statement for Calculating Delays and Damages. The latest revision of this Policy, dated May 19, 2006, is herewith incorporated by reference and made a part hereof. Copies of the Policy Statement may be obtained on the following City of Mesa web link: http://mesaaz.gov/business/engineering/policies-forms

If progress in the work covered by the contract is delayed, the provisions of the Policy Statement shall come into effect.

Neither this section nor the Policy Statement shall be construed to void any provisions of this contract which require notice of delays; provides for arbitration or other procedures for settlement, or provides for liquidated damages.

H. Subsection 301.3 – Revise Subparagraph (B) compaction requirements to read as follows and add general note to all compaction requirements:

(B) Detached sidewalks not subject to vehicular traffic …… 90 Percent
All compaction above shall be performed within 2 percent of the optimum moisture content.

I. Subsection 306.1 – Add the following text to the end of this subsection:

Unless otherwise approved in writing in advance by the City Engineer, geogrid reinforcement of the subgrade shall not be used to reduce (or justify a reduction in) the pavement or aggregate base course thickness or cross-section.

J. Subsection 310.3 – Revise subparagraph (C) to reflect 90%

K. Subsection 310.4 – Revise the Corrective Measures in Table 310-1, Type IV and Type V to add the following:

NOTE: All lime treated ABC shall have plasticity index of Non-Plastic (NP) per City of Mesa Policy for Testing of Lime-Modified Aggregate Base to Determine Plasticity Index, latest version (available at http://mesaaz.gov/business/engineering/policies-forms.)

L. Section 321 – Remove any references to Warm Mix Asphalt (WMA) Technologies.

M. Subsection 321.1 – Add the following to the subsection:

All work shall be in accordance with the project specifications, as shown on the approved plans or as directed in writing by the Engineer.

N. Subsection 321.4 – Remove any reference to CSS-1h.

O. Subsection 321.5 – Delete the 1st paragraph and substitute the following:

The mix design shall be in accordance with the current East Valley Asphalt Committee criteria and be included on the current approved asphalt mixes list.

P. Subsection 321.5 – Delete the 3rd paragraph and substitute the following:

If the contractor elects to changes its source of material, the contractor shall furnish the Engineer with a new mix design that is in accordance the East Valley Asphalt Committee criteria and is included on the current approved asphalt mixes list.

Q. Subsection 321.8.4 – Modify the subsection to add the following:

Cold rolling of asphalt pavement (defined as compacting the pavement when its temperature has dropped below 185 degrees Fahrenheit) is prohibited.

R. Subsection 321.8.6 – Delete the 2nd paragraph and substitute the following:

Asphalt concrete mix aggregate gradation and percentage of asphalt binder shall be in accordance with Section 710 and the East Valley Asphalt Committee criteria.

S. Subsection 321.10.2 – Delete reference to “fan drying per AASHTO T209 Section 15”.

T. Subsection 321.10.2 – Add the following to paragraph 5 after TABLE 321-4:

The minimum limits of corrective action shall include the affected area but no less than one city block or 660 feet. The Contractor shall remove any areas of bleeding, but in no case less than the specified roller width, as directed by the Engineer, and replace the affected material with new material meeting the specification requirements for the mix type involved. This shall be done, any time within the one (1) year warranty until the bleeding has been corrected, at no additional cost to the City. Should the stability of the mix be affected by the excess asphalt cement to such an extent that the pavement is displaced under normal traffic load, within the one (1) year warranty; the areas affected shall be removed and replaced with new material, at no additional cost to the City. The criteria for determining stability of the mix shall be 3/8-inch movement or more of the asphalt (rutting or shoving) measured with a 10-foot straight edge in any direction.

U. Subsection 321.10.4 – Add the following after TABLE 321-6:

Asphalt pavement thickness deficiency greater 0.50 inches shall require an 8-foot edge mill and the placement of a minimum of 1.5-inch of additional asphalt overlay at no cost to the owner.

V. Subsection 321.10.6 – Delete this section in its entirety.

W. Subsection 321.10.11 – Delete this section in it's entirely.

X. Subsection 340.3.9 – Modify the subsection to add the following:

Vertical displacement across joints shall not exceed 1/8 inch.

Y. Subsection 340.3.10 – Add the following immediately after the first paragraph:

Concrete work is considered deficient if any of the following conditions exist:

A. Misalignment, heaving or settlement that results in a discontinuity in excess of 1/8-inch over 5 feet.
B. Visible cracks, not contained within control joints, that have opened to 1/32-inch or more.
C. Crazing, spalling or scaling of the concrete surface.
D. Gouges that expose aggregate.
E. Graffiti
F. Imprints and/or depressions causing ponding or an inconsistency in the specified finish of the concrete.
G. Broken or chipped edges.
H. Structural cracking, durability cracking, or alkali-silica reaction (ASR) cracking
I. Visible cracking in concrete used for architectural finishes and that negatively impacts the aesthetics, as determined by the Engineer.

Z. Subsection 340.3.10 – Replace the second paragraph with the following:

Concrete work that does not comply with tolerance requirements of this section and Section 340.3.9 shall be removed and replaced to the nearest joint. Remove and replace gutters that exceed the ponding tolerance. Concrete work that exhibits these deficiencies (except graffiti) within the one (1) year warranty period shall also be subject to removal and replacement, to the nearest joint, at no cost to the owner. Grinding is not allowed in lieu of replacement. Any use of grinding to correct minor deficiencies shall be submitted and approved by the Engineer prior to use.

AA. Subsection 401.3 – Add a new sentence to read as follows:

Contractor shall use off-duty City of Mesa police officers as required by the City of Mesa Traffic Barricade Manual for work within the City limits.

BB. Section 405.4 – Add the following: Chains will be required between the frame and cover on all survey monuments as shown in M.A.G. Detail 120-1.

CC. Subsection 601.4.3 – Delete penultimate paragraph and replace with the following:

"Where mechanical compaction is used, backfill shall be placed in lifts the height of which shall not exceed that which can be effectively compacted depending on the type of material, type of equipment and methods used, and under no circumstances shall exceed 2 feet."

DD. Subsection 601.4.5 – Revise the first sentence of the third paragraph of this subsection to read as follows:

Flooding is not acceptable as a water consolidation method unless it is clearly specified in the Plans or Special Provisions. Water settling is not allowable within County rights-of-way.

Delete the last paragraph of this Subsection and add the following:

Drop hammer equipment similar to that used for breaking pavement or driving piles shall not be used for compacting backfill at any stage of the backfill operations.

EE. Subsection 601.6.5 – Add the following new paragraph:

CLSM: Where Controlled Low Strength Material (CSLM) backfill is specified on the drawings, no additional compensation shall be given. CSLM backfill shall be included in the unit price per linear foot. No slurry shall come into contact with any metal surface, services, air releases, etc. The metal shall be insulated with a layer of native material provided that native material is acceptable

FF. Subsection 610.3 – Delete all references to PVC water pipe.

GG. Subsection 610.4 – Remove and replace the third paragraph with:

Pipe joint deflection shall be limited to three (3) degrees or 67 percent of the manufacturer's recommended maximum allowable deflection, whichever is less.
Add the following paragraphs to the end of this section:

The pipe shall be laid accurately to the alignments and grades shown on the plans or established by the Engineer. All adjustment to lines and grade shall be made by scraping away or filling in under the barrel of the pipe. Hammering on the pipe, dropping the pipe, or shimming under the pipe with rocks, blocks, or foreign material to bring the pipe to grade will not be permitted.

The pipe shall be handled and lowered into the trench by means of belt slings. The number and size of slings shall be adequate to prevent damage to the pipe.

Prior to placing each pipe section, the interior shall be cleaned of all foreign mater. Cleaning shall be accomplished by brushing, blowing with compressed air, washing with water, or by any combination of these methods necessary to remove all foreign matter.
The pipe shall be laid with a uniform bearing under the full length of the barrel. Normally, the pipe shall be laid with the bell end pointed in the direction of installation. On grades exceeding 10 percent, the pipe shall be laid uphill.

The pipe shall be assembled and joined in accordance with the manufacturer's instructions for the type of joint used. All portions of the joints shall be thoroughly cleaned before the sections of pipe are put together. The position of the rubber gasket shall be checked with a feeler gage at each joint prior to laying the next section.

HH. Subsection 610.6.1 – Add the following sentence:

All ductile iron pipe shall be polyethylene wrapped unless approved otherwise by the City.

II. Subsection 610.6.2 – Delete all references to naturally pigmented material.

JJ. Subsection 610.7 – Add the following paragraph to the end of this section:

Waterline air release and vacuum valves shall not be constructed in driveways, sidewalks, pathways, washes or retention/detention areas unless approved in writing by the City.

KK. Subsection 610.9 – Add the following paragraphs to the end of this section:

Fire hydrants shall not be constructed in driveways, sidewalks, pathways, washes or retention/detention areas unless approved in writing by the City.

Minimum distance allowable between the centerline of the lowest nozzle and ground line is 18 inches.

The approved list of fire hydrants that are allowed by the City of Mesa is available on-line at http://mesaaz.gov/business/engineering/approve-products-equipment-natural-gas-line-contractors. No exceptions are allowed.

LL. Subsection 610.10 – Add the following paragraph to the end of this section:

Fittings cut into ACP within six feet of another fitting or joint will require the short section of pipe to be removed and replaced with ductile iron pipe.

MM. Subsection 610.11 – Add the following paragraph:

Water meters shall not be constructed in driveways sidewalks, washes or retention/detention areas unless approved by the City.

NN. Subsection 610.10 – Revise subparagraph (A) as follows:

Include ductile iron per ASTM A536 as an acceptable sleeve material.

OO. Subsection 610.10 – Revise subparagraph (B)(1) as follows:

Remove cadmium plating per ASTM B766 as a coating option.

PP. Subsection 610.10 – Revise subparagraph (B)(1) to add:

Bolts and nuts for water transmission, water production, and water supply facilities shall be per Water Resources Approved Products List.

QQ. Subsection 610.10 – Add the following subsection:

(F) Electrical isolation in the form of either flexible or rigid insulating fittings, as specified herein, shall be provided as required to obtain electrical isolation at flanges of main line valves, flanges at tie-ins, and flanges for air release/air vacuum valve connections.

Rigid insulating fittings shall be flanges with dielectric insulating flange kits containing full face insulating gaskets, full length insulating bolt sleeves and double set insulating washers. All insulating materials shall be of a type designated by the manufacturer as suitable for service at the operating temperatures and pressure specified and be compliant with the Water Resources Approved Products List. Dielectric flange insulating kits shall be installed during the installation of the flange in which the kits is to be located.

Rigid insulating fittings between threaded steel outlets and corporation stops shall be dielectric insulating unions. Dielectric insulating unions shall be 250-pound test and shall be ground joint, precision machined and threaded to accurate dimensions. They shall be composed of malleable iron castings with molded nylon insulation. The nylon insulation shall be of a non-brittle type capable of sever shock loads and impact without fracturing. It shall be chemically unaffected by specified projects at temperatures to 120 degrees F. The nylon insulator shall have excellent dielectric properties.

RR. Add the following new subsection:

610.15.1 Corrosion Monitoring Test Stations:

The Contractor shall furnish all materials and perform all work for installing a corrosion monitoring system for all buried Concrete Cylinder Pipelines.

(A) Materials and Construction Methods:

Two wire test stations shall be installed along the pipeline at intervals not to exceed 1,000 feet, or as indicated by project specific plans and specifications. Four wire insulating test station shall be installed at all insulating fittings where shown on the plans, with two wires installed on each side of the insulating fittings.

Wires for corrosion monitoring points shall be minimum AWG No. 8 insulated with HMW/PE insulation. Wires shall be sized such that they may be used of any and all of the field tests specified.

Thermite weld connections, as shown, specified or directed by the Engineer, shall be made with thermite weld kits specifically designed by the manufacturer for such applications. Thermite welds shall be a maximum 25-gram charge or per project specifications.

When connecting test lead conductors by the use of thermite weld equipment to concrete cylinder pipe or steel pipe, the pipe surface shall be cleaned by scraping, filing, or wire brushing to produce a clean, bright surface. The thermite weld shall be installed in accordance with the manufacturer's instructions and as indicated. Upon completion of the thermite weld, but before the application of the cement-mortar coating, the Contractor shall strike the weld with two sharp blows from a brass hammer. Resistance between leads shall be measured and shall not exceed 150% of calculated theoretical resistance. All defective welds shall be replaced by the Contractor.

(B) Field Tests:

(1) Field tests shall be performed by a qualified testing firm under the supervision of a NACE-certified cathodic protection specialist to determine the following:

- Pipeline electrical conductivity.
- Effectiveness of insulating joints.
- Metering point integrity.
- Presence of stray D/C current on the pipeline.
- Initial pipe to soil potential.
- Casing Isolation

Testing firm qualifications and all test data shall be submitted for approval by the City. All test results shall be submitted to the City.

(2) The testing procedure shall be as follows:

(a) The test shall be conducted by measuring response of the pipe to the application of cathodic protection test current with an auxiliary ground at a minimum of 10 feet from the pipeline. The positive terminal of the portable test rectifier unit shall be connected to the auxiliary ground. The negative terminal shall be connected to the pipeline at a test station. The test rectifier shall be energized with A/C power and shall be adjusted to provide sufficient D/C current to obtain adequate pipe-to-soil potential shifts along the pipeline for performing the tests. A current interrupter shall be inserted in the test rectifier circuit so that the rectifier is turned "OFF" and "ON" automatically. A set of "NATIVE" potentials shall be obtained prior to the application of the test current.

(b) Measurements of the pipe-to-soil potential shall be made with the test current turned both off and on. The pipe-to-soil potential shall be measured at representative locations

along the full lengths of the pipeline to be tested. In addition, potential measurements shall be taken across the dielectric insulating fittings. The pipe-to-soil potentials shall be measured with a potentiometer/voltmeter circuit of a multi-combination meter and with respect to portable copper sulfate reference electrode placed at grade. Contact to the pipe for obtaining potential measurements shall be made at test stations previously installed during construction for that purpose.

(c) If the pipe-to-soil potential is made more positive by application of the test current, electrical discontinuity of the pipeline is indicated between that point and the point at which the test rectifier negative connection was made.

(d) If the pipe-to-soil potential is made more negative by application of the test current, electrical continuity of the pipeline is indicated between that point and the point at which the test rectifier negative connection was made. The magnitude of negative shifts will be analyzed to determine if the degree of electrical continuity is consistent with the specified requirements for joint bonding.

(e) Dielectric isolation across insulating fittings shall be indicated by the pipe-to-soil being more positive or insignificant differences in the pipe-to-soil potentials across the fittings with the application of the test current.

(f) Multiple test set-ups will be necessary so that the full length of the pipeline is demonstrated to be electrically continuous and dielectrically isolated from other structures.

SS. Subsection 610.14 – Add the following paragraph:

All pipelines shall be left clean. Before filling any section of pipeline with water, it shall be cleaned of all dirt and debris. The Engineer shall inspect the interior of the pipeline during installation. The Contractor shall furnish the necessary lights and equipment for making the inspection.

TT. Subsection 610.16 – Add the following paragraph:

(l) Corrosion Monitoring Test Stations: Measurement and payment for corrosion monitoring test stations shall be per each test station as furnished and installed per the plans, including all excavation, backfill, wiring, field testing, valve box and cover, and all appurtenant work.

UU. Subsection 611.2 – Disinfecting Water Mains – Modify the subsection to add:

Water mains shall be disinfected per AWWA C-651, latest edition. In cases of overlap or conflict between MAG Section 611 and AWWA C-651, AWWA C-651 shall take precedence. In addition, add the following text to the end of MAG Section 611.2.12:

The Contractor shall also note that the City Mesa of Water Resources Department conducts water main sampling for bacteria tests from 8:00 a.m. to 3:00 p.m., Monday through Thursday, except holidays, and requires a minimum of two business days' notice prior to said sampling. The Contractor shall schedule the required bacteria testing within this time frame. There shall be no additional payment or allotment of time to Contractor for failure to coordinate the sampling in accordance with the City's availability (as noted herein) to perform the sampling.

If the Contractor schedules work such that sampling for bacteria tests is to be conducted on Friday, Saturday or Sunday, the Contractor may employ the services of a private laboratory to collect the samples and perform the required analytical tests. However, prior to using a private laboratory, the Contractor shall submit the laboratory's information, credentials and proposed test methods to the City for prior approval. The laboratory shall be certified by the Arizona Department of Health Services (ADHS) to

perform coliform bacteria and Heterotrophic Plate Count (HPC) tests in accordance with American Water Works Association (AWWA), Standard C651-14, *Disinfecting Water Mains* (State certified). (Refer to ADHS's webpage for the list of approved contractors https://app.azdhs.gov/bfs/labs/elbis/drinkingwatertestinglabs/drinkingwatersearchcontentpage.aspx). When available, test results from the private laboratory shall be sent via email to the City Inspector and shall also be emailed to WaterQualityVM@MesaAz.gov. Sampling and testing performed by the City is done at no cost to the Contractor; whereas, the Contractor shall pay all costs (without any pass through to the City) for sampling and testing by the private laboratory.

VV. Subsection 611.4 – Modify the subsection to add:

(C) VIDEO INSPECTION OF STORM DRAIN MAINLINES:

The Contractor shall provide the Engineer with an annotated video inspection record (in DVD format) of the new mainline storm drain pipeline and of any existing storm drain pipelines to which new storm drain connections (e.g., catch basin lateral pipes) are made. The video shall clearly show all joints, seals, connections, connecting pipes, junction structures and manholes. In the case of new mainline storm drain pipeline, the video shall show the entire length of the new mainline storm drain pipeline installation. In the case of existing storm drain pipeline to which new storm drain connections are made, the video shall clearly show each connection and shall show a distance along the existing storm drain pipe of not less than ten (10) feet on either side of the connection. The video annotation shall include a bookmark and identifying note for each manhole, junction structure, and connection. This video shall be provided to the Engineer. The Contractor will not be allowed to place the final pavement over the storm drain line until the Engineer has reviewed and approved the video. No separate payment will be made for this inspection; the cost of the video inspection shall be included in the cost of the pipe.

WW. Subsection 615.2 – Modify the subsection to add:

Ductile iron pipe shall be minimum pressure class 150 unless otherwise noted and shall be ceramic epoxy lined as approved by the City Engineer.

XX. Section 620 – Remove Section 620 entirely and add the following section:

SECTION 620

CAST-IN-PLACE CONCRETE PIPE

620.1 GENERAL:
This specification covers cast-in-place non-reinforced concrete pipe intended for use as storm sewers or irrigation lines. The abbreviated title is CIPP. CIPP is conduit made of Portland cement concrete cast monolithically in a properly prepared trench, using equipment specifically designed for this purpose. The type of equipment to be used by the Contractor must be approved by the Engineer and the Contractor may be required to furnish evidence of the successful use of this equipment on prior work. CIPP will be placed only:

(A) By experienced operators. The Engineer will be the sole judge as to experience level.

(B) In the presence of the Engineer or Representative.

(C) In ground capable of standing unsupported from the bottom of the trench to the top of the pipe without sloughing.

(D) In fill when it can be demonstrated to the satisfaction of the Engineer that the fill will adequately support the pipe.

(E) When allowed as an allowable storm sewer pipe material, this designation is no warranty, expressed or implied, that conditions will be suitable for the use of CIPP. Any

costs incurred and/or time required to provide suitable conditions or to substitute an alternate pipe acceptable to the Engineer, in whole or part, shall be the responsibility of the Contractor. In addition the Contractor at no additional cost to the City shall provide the following: A Soils Report that confirms that soil conditions are adequate for CIPP installation; Engineering Analysis that indicates the hydraulic grade line for the design events is kept within the CIPP installation. The City Engineer must grant specific approval for the installation of CIPP

620.2 MATERIALS:

620.2.1 Cement shall be ASTM C-150, Type II, low alkali as per Section 725.

620.2.2 Sand aggregate used for concrete and mortar shall conform to Section 701. Maximum size of the aggregate shall not be greater than 1/3 of the minimum wall thickness up to and including a wall thickness of 4-1/2 inches. The maximum aggregate size is 1-1/2 inches.

620.2.3 Water used for concrete and for curing the pipe shall be as per Section 725.

620.2.4 Concrete shall be Class A in accordance with Section 725. Slump shall be the minimum required for satisfactory placement of the concrete by the equipment used by the Contractor. The slump shall not exceed 3 inches.

620.2.5 Bonding mortar shall consist of two (2) or more parts of cement to three (3) parts of sand by volume.

620.3 CONSTRUCTION METHODS:

620.3.1 Excavation: The trench will be neatly excavated with vertical sides and semi-circular bottom. The trench shall be shaped to form the bottom outside of the pipe on the alignment and to the grades specified in the plans. Departure from and return to the established grade for the finished trench and the invert of the installed pipe shall not exceed 1 inch per 10 linear feet with a maximum allowable departure of 0.10 feet. Departure from and return to specified alignment for the trench and pipe shall not exceed the allowable tolerances specified for the grade. The bottom of the trench, hereinafter known as the trench form, will be shaped to provide full, form, and uniform support by undisturbed earth or compacted fill for at least the bottom 210 degrees of the pipe. Density of the fill shall be at least five percent (5%) greater than the natural in place soil, but in no case less than 90 percent (90%) when tested in accordance with AASHTO T-99, Method A and T-191 or ASTM D-2922 and D-3017.

In no case will pipe be installed in rocky, fractured or fragmented strata or if the soil consists of large cobblestones or boulders. The Contractor may substitute rubber gasket reinforced concrete pipe for CIPP in these unsuitable areas. There will be no additional payment for this substitution. In no case will expansive soils be used for backfill

Excavated trench shall be checked for compliance with requirements for grade and alignment prior to placement of concrete. The Contractor shall submit his proposed method of grade and alignment control and checking of same for conformance with specifications to the Engineer for his approval prior to start of work. The Contractor shall supply manpower, equipment and materials, as are required, to provide and confirm compliance with grade and alignment requirements. This is a non- pay item and all costs incurred shall be included in the bid item(s) for the pipe installation.

620.3.2 Placement: At the time of concrete placement, all soil in the trench will be adequately moistened so that water is not drawn from the freshly placed concrete. However, the trench form will be completely free of water, mud, and debris. All forming devices, including the slipforms and hopper of the placement device, shall be thoroughly moistened. Concrete shall not be placed when temperature of the concrete exceeds 90 degrees Fahrenheit or is less than 50 degrees Fahrenheit. The soil adjacent to the trench shall be at a temperature above freezing.

The pipe shall be constructed in one placement, the entire cross-section being placed monolithically. Inside forms shall be sufficiently rigid to withstand consolidation of the fresh concrete. Placement shall be such as to produce a thoroughly consolidated homogeneous concrete mixture conforming to the test requirements of this specification. Effective consolidation means shall be applied to the fresh concrete over the entire circumference and from within the pipe shell. Consolidation means shall be capable of

effectively placing and consolidating fresh concrete at production speeds. Methods of consolidating shall be capable of building up sufficient pressure to effectively bond the concrete to the surrounding earth and to keep loose sand, mud and water out of the pipe shell.

Under no circumstances will the Contractor be allowed to continue the pipe installation if the vibrators of the cast-in-place machine are inoperable. Portable vibrators or "stingers" shall only be used to supplement internal vibrators on the machine and not as a sole source to consolidate and distribute the concrete mix.

The Contractor shall make provisions for removing sloughed material, debris and any foreign objects from trench before and during placement of concrete such that buildup of material does not occur ahead of the machine. In addition, small transverse trenches shall be dug across trench bottom, at distances not to exceed 25 linear feet, to receive soil built up and pushed ahead of the slipform.

(A) Construction Joints:

When pipe placement stops in excess of sixty (60) minutes, a construction joint shall be formed. The ends of the pipe that are to be butt contact shall be left in rough condition with a slope between 20 and 45 degrees. Number 4 reinforcing bars shall be embedded 12 inches in the previous pour and 12 inches into the next pour and shall be placed 12 inches on center for pipe 42 inches in diameter or less and shall be placed 18 inches on center for pipe diameters in excess of 42 inches. Immediately before resuming concrete placement the surface to be bonded shall be cleaned of all laitance, coatings, foreign materials, and loose or defective concrete thoroughly wetted and coated with a layer of bonding mortar (Section 620.2.5) approximately 1/4 inch thick. In lieu of the bonding mortar, neat cement paste may be thoroughly scrubbed onto the wet surface of the previously placed concrete.

For a joint that may be used for connections to another pipe or structure, a joint shall be made by squaring off the end of the pipe. An excavation shall be made along the sides and bottom of the cast-in-place pipe, for any diameter, to permit casting of a concrete collar as described above.

(B) Pipe Dimensions and Tolerances:

The internal diameter of the pipe at any point shall not be less than 95% of the nominal diameter, and the average of any four (4) measurements of the internal diameter made at 45 degree intervals shall not be less than the nominal diameter.

Pipe less than 15 inches inside diameter shall not be allowed.

For pipe with an inside diameter of 15 inches to 24 inches the minimum wall thickness shall be 2-1/2 inches. For pipe exceeding 24 inches inside diameter the minimum wall thickness shall be 1/12 of the inside diameter, plus 1" inch.

Offsets at form laps and horizontal edges shall not exceed 1/2 inch for pipe having inside diameter not greater than 42 inches; 3/4 inch for pipe having inside diameter greater than 42 inches, but not greater than 72 inches; and 1 inch for pipe having inside diameter greater than 72 inches.

(C) Pipes Placement:

It is essential that concrete placement be done in a smooth and steady manner with as few starts and stops as is possible. The Contractor shall schedule materials and operate the pipe machine at speeds and in a manner that will achieve this.

The Contractor shall provide an anchoring system for pull of the machine in a manner which will provide the least probability of causing deviations in grade and/or alignment. Adjustments to or modifications in anchoring system when required in the opinion of the Engineer shall be made at no additional cost to the project.

620.3.3 Curing and Backfilling: The Contractor shall be responsible for proper curing of the concrete and backfilling the trench to an even grade. Final backfill and compaction shall not be started until concrete has developed a compressive strength of at least 3000 psi. The pipe shall be checked for grade, alignment and thickness prior to backfilling.

Curing shall be performed in such a manner as to prevent the premature drying of the concrete. The Contractor shall use the method described below.

(A) Polyethylene film complying with ASTM C-171, nominal thickness 0.0015 inches, shall be placed on the exposed top surface of the pipe immediately after the pipe is cast. The film shall be anchored in place with loose soil to assure continuous, adequate curing.

A humid atmosphere within the pipe, as evidenced by condensation on the interior surface, shall be maintained for at least seven (7) days following placement, except for a maximum period of 24 hours allowed for removing forms and making repairs. To prevent air drafts which may dry the pipe and to maintain a humid atmosphere inside the pipe, all openings, ends, manholes, connector pipes shall be kept closed or securely covered, except when actual work is in progress on the inside of the pipe. The pipeline shall be partially filled with water during the curing period when work is not being performed on the inside of the pipe.

620.3.4 Repair: Immediately after removal of the forms, the inside of pipeline will be inspected for required repairs and conformance with all dimensional requirements including alignment and grade. The Engineer shall be the sole judge as to the repairability of deficiencies. He shall require removal and replacement of those sections of pipeline which he judges to be non-repairable or which is not within required dimensional tolerances including alignment and grade within required dimensional tolerances including alignment and grade.

When concrete placement is done by a method requiring the use of metal inner forms, the Contractor shall schedule his work force, by extended, staggered or multiple shifts, as required, to provide for removal of forms within 4 to 6 hours of placement of concrete and start of repairing, patching and finishing of pipeline to conform with specification requirements.

When concrete placement is done by methods using pneumatically inflated inner liner, the Contractor shall schedule his work force, by extended, staggered or multiple shifts, as required, to provide for removal of the pneumatic inner liner within 12 hours of placement of concrete and start of repairing, patching and finishing of pipeline to conform with specification requirements.

All rock pockets, non-longitudinal cracks or indentations shall be cleaned out, moistened and filled with 1:2 cement grout or approved epoxy material. Except where, in the opinion of the Engineer, the width and/or length of the crack may indicate a structural deficiency, repairs shall be made as required for longitudinal cracks.

At the discretion of the Engineer, longitudinal cracks exceeding 0.01 inches in width and 12 inches in length may be cause for rejection and removal and replacement of that portion of the pipe. Subject to the approval of the Engineer, cracks may be repaired using a pressure applied epoxy compound capable of providing structural correction to the area in addition to sealing the void. A longitudinal crack shall be defined as one which has the general direction of a 30 degree angle or less with the alignment of the pipe.

Irrespective of concrete placement method, all repairs, patches and finishing shall be completed within 24 hours of concrete placement.
The Contractor, prior to start of concrete placement on project shall submit a written schedule of his proposed work activities and work time schedules for the Engineer's review and approval. No time schedule requiring overtime by the Engineer's staff is authorized without specific written approval of the Engineer.

Compliance with this section is a non-pay item and any costs incurred shall be included in the bid proposal item(s) for the pipe.

620.3.5 Finishing: Except for the form offsets, the interior surface of the pipe shall be equivalent to or better than a wood float finish. Form offsets shall be trimmed so as to provide a reasonably tapered slope from surface to surface. The bottom of the pipe below the metal forms shall be finished in a workmanlike manner and shall conform to the general circular circumference of the pipe without sags, dips and humps. All extraneous concrete shall be removed from the interior surface.

620.4 TESTS:

Random tests shall be made of the wall thickness at the top, bottom and sides, approximately every 100 feet, on a daily basis by probes through fresh concrete or small holes drilled through the concrete. Holes shall be properly and permanently closed and sealed, flush with the inside surface of the pipe, after measurements are made, in accordance with the requirements of the fifth paragraph of the Mesa Supplement to MAG Specifications Subsection 620.3.4, contained herein.

Test cylinders shall be prepared and tested as per Section 725. If the cylinder tests indicate that the concrete does not meet the specified strength requirements, cores shall be taken from the same section of concrete represented by the faulty test cylinder under the supervision of the Engineer.

The concrete should be at least 14 days old before the core specimens are taken. The diameter of the core specimens for the determination of compressive strength should be at least three (3) times the maximum nominal size of the coarse aggregate used and must be at least twice the maximum nominal size of coarse aggregate.

The length of the specimen, when capped, should be twice the core diameter. A core having a maximum height of less than 95 percent of its diameter before capping or a height less than its diameter after capping shall not be tested.

If cores are taken, the Contractor shall patch all core holes in such a manner that the patch will be permanent, will not leak, and will have a smooth interior finish flush with the interior surface of the pipe.

Procedures and payment for coring shall be in accordance with applicable portions of Section 725.

The Engineer will evaluate the test results and his decision as to required corrective action will be final.

620.5 MEASUREMENT:

Measurement of cast-in-place concrete pipe will be the number of linear feet of pipe measured horizontally along the pipe axis from end to end of pipe. At change in diameter, the measurement shall be to center of manhole or transition.

620.6 PAYMENT:

Payment will be made at the contract unit price bid per linear foot to the nearest foot for each size of pipe and shall be compensation in full for furnishing and installing the cast-in-place concrete pipe as specified including removal of obstructions, excavation, backfilling, compacting, testing, and all incidental costs not specifically covered in other items in the proposal.

YY. <u>Subsection 625.3.1</u> – Add the following text to the end of this Section:

All manholes shall have a minimum of 6-inches and maximum of 16-inches of reinforced concrete adjusting rings.

All joints between shaft sections, cones and adjustment rings shall be sealed with “RAM NEK” plastic gasket, mortar, or approved equal.

When a manhole is called out in the plans or in the specification to be lined with a PVC T-lock lining, all exposed concrete surfaces including the shelf and opening shall be lined.

When manholes are placed within asphalt paved areas, the rings and covers shall be installed per M.A.G. Standard Detail 422.

ZZ. Subsection 630.2 – Add the following text to the end of this section:

The approved list of gate valves that are allowed by the City of Mesa is available on-line at http://mesaaz.gov/business/engineering/approve-products-equipment-natural-gas-line-contractors. No exceptions are allowed.

AAA. Subsection 630.3.1 – Revise the sentence that refers to valves larger than 20 inches having flanged ends, as follows:

Direct-buried valves larger than 20-inches shall be installed with mechanical joint ends unless otherwise indicated by project specific plans and specifications. Valves with flanged ends may be installed with adjacent flexible couplings or other approved provisions to minimize joint rigidity. Valves and joints shall be restrained as required.

BBB. Subsection 630.3.1(C) – Delete the entire subsection and replace it with the following text:

(C) Valve 14 inches through 20 inches:

Valves shall be iron body resilient-seated gate valves in accordance with the latest revision of AWWA C-509 or AWWA C-515.

Valves designed in accordance with AWWA C-509 or AWWA C-515 shall be designed to work equally well with pressure on either side of the gate.

Valves shall not be installed in the horizontal position without prior written approval by Water Resources. With prior approval, valves installed in the horizontal position shall be equipped with bronze rollers, scrapers, and tracks, and shall be designed for service in the horizontal position.

Bypass valves are required on transmission main valves 20-inches in diameter and larger in accordance with the City of Mesa Engineering and Design Standards Manual. Bypass size shall be in accordance with Table 630-1 or as indicated on the design drawings.

Valves shall not be placed in vaults unless otherwise approved in writing by the Water Resources Department.

CCC. Subsection 630.3.1(D) – Delete the entire subsection and replace it with the following text:

(D) Valves 24 inches and Larger:

Valves shall be resilient-seated gate valves in accordance with the latest revision of AWWA C-509 or C-515, unless otherwise approved by the City.

Valves shall not be installed in the horizontal position without prior written approval by Water Resources. With prior approval, valves installed in the horizontal position shall be equipped with bronze rollers, scrapers, and tracks, and shall be designed for service in the horizontal position.

Bypass valves are required on transmission main valves 20-inches in diameter and larger in accordance with the City of Mesa Engineering and Design Standards Manual. Bypass size shall be in accordance with Table 630-1 or as indicated on the design drawings.

Valves shall not be placed in vaults unless otherwise approved by the City.

DDD. Subsection 630.4.2(B) – Revise the subsection to remove the reference to JCM #415 Type 2 ESS or approved equal and add the following:

Tapping sleeves shall be per the Water Resources Approved Products List.

EEE. Subsection 630.4.2(A)(2)(a) – Delete the subsection in its entirety.

FFF. Subsection 630.5 Butterfly valves: Delete paragraph (B) 3 INCHES THROUGH 12 INCHES:the section in its entirety.

GGG. Section 631 – Delete all references to “polyethylene pipe” from this section.

HHH. Subsection 631.3.5 – Revise the subsection to delete all references to tapped couplings and direct taps and add the following:

Services shall be installed per City of Mesa Design Standards and Water Resources Approved Products List.

III. Subsection 710.1 – Delete 2nd sentence in 1st paragraph and replace with the following two(2) sentences:

Mineral admixture, mineral filler and anti-stripping agent shall be included in the mixture when required by the mix design or by the Engineer. All materials shall be proportioned by weight, volume or a combination in a central mix plant in the proportions required by the mix design to provide a homogeneous and workable mass.

JJJ. Subsection 710.1 – Add the following after TABLE 710-1:

Unless otherwise noted, all hot asphalt pavement shall meet the “Hot Asphalt Mix Criteria” latest approved version at the time of asphalt placement, as established by the East Valley Asphalt Committee. Additionally, all hot asphalt mixes provided shall be approved in writing by the East Valley Asphalt Committee prior to placement. Copies of the “Hot Asphalt Mix Criteria” are available on the City of Mesa Engineering web link:

http://mesaaz.gov/business/engineering/approve-products-equipment-natural-gas-line-contractors

KKK. Subsection710.2.2 – Delete last paragraph and substitute the following:

The natural sand shall not exceed 15 percent for Marshall mixes and Gyratory mixes by weight of the total aggregate for a mix.

LLL. Subsection 710.2.4 – Add the following to this section:

When liquid anti-stripping agents are used, the agent shall conform to the requirements of AASHTO designation R 15-89. The agent shall be added in accordance with the manufacturer’s recommended dosage rate. Other mineral filler, mineral admixture, or anti-stripping agents, shall be approved by the Engineer prior to start of the mix design

MMM. Section 718:

Unless otherwise noted on the Plans or Specifications, all Preservative Seals for asphalt concrete pavement in the City of Mesa shall be Type D in compliance with the test methods and requirements within M.A.G. Section 718.

NNN. Subsection 725.2.1 – (Pozzolonic): Only Class F Pozzolonic material will be permitted in Portland cement concrete.

OOO. Subsection 726.1 – Add the following to this subsection:

For concrete curbs, sidewalks and driveways, the contractor shall use a liquid membrane conforming to AASHTO M-148, Type 2 (White Pigmented).

PPP. Subsection 750.1 - Delete section in its entirety.

QQQ. Subsection 750.3 Add the following paragraph:

Ductile iron pipe shall be either push-on or mechanical joint. Lug type restraining systems which rely on penetrating into the pipe wall are acceptable. Alternatively, mechanical restraining systems shall be as approved in the City of Mesa Engineering and Design Standards Manual. The approved list of Mechanical Restraint and Joint Systems that are allowed in the City of Mesa is available on-line at: http://mesaaz.gov/business/engineering/approve-products-equipment-natural-gas-line-contractors. No exceptions are allowed.

Where flanged fittings are called for on the plans, flanges shall be integrally cast with pipe and shall comply with ANSI B16.1, Class 125. If threaded flanges are used, a minimum Class 53 ductile iron pipe is required.

RRR. Subsection 750.4 – Delete references to gray iron and add the following:

See Water Resources Approved Products List for approved fitting materials, configurations, and manufacturers.

SSS. Section 752 – Delete section in its entirety.

TTT. Section 756 – In addition to the standard requirements of this Section, the following requirements shall also pertain:

Internal bronze parts shall be low-zinc (not more than seven percent (7%) zinc). There shall be two (2) hose nozzles, 2 ½-inches in diameter with National Standard Threads; and one (1) steamer connection 4 ½-inches in diameter with National Standard Threads.

The approved list of fire hydrants that are allowed by the City of Mesa is available on-line at http://mesaaz.gov/business/engineering/approve-products-equipment-natural-gas-line-contractors. No exceptions are allowed.

UUU. Section 758 - Modify the section as follows:

Delete all references to AWWA C301, prestressed concrete pressure pipe.

VVV. Subsection 772.2 – Modify the subsection as follows:

ALL posts, rails and braces shall be Type A, unless otherwise specified on the plans or in the Special Provisions.

WWW. Section 792 – Delete all reference to Lignin-Based, Organic Resin and Petroleum Resin Dust Palliatives from this section within the City of Mesa.

XXX. SPECIAL NOTICE REGARDING STREET EXCAVATION BACKFILLING AND PAVEMENT REPLACEMENT:

The Contractor shall be responsible for backfilling and replacing pavement in all street excavations per the latest edition of the City of Mesa's Policy Statement for Street Trench Backfilling and Pavement Replacement, latest version. Copies of this policy statement are available on-line at

http://mesaaz.gov/business/engineering/policies-forms.

SPECIAL ATTENTION IS CALLED TO THE POLICY STATEMENT REQUIREMENTS FOR TRANSVERSE TRENCHES. BACKFILL IN ALL TRANSVERSE TRENCHES SHALL BE ONE-HALF (1/2) SACK CONTROLLED LOW STRENGTH MATERIAL PER MAG SECTION 728.

A cash bond, as stipulated in the policy statement, will not be required for City of Mesa contract projects, but will be required for permit construction.

YYY. SPECIAL NOTICE REGARDING DRIVEWAY AND SIDEWALK RAMP CUTS IN EXISTING CURB AND GUTTER SECTION:

The City of Mesa does not allow vertical, longitudinal cuts through the gutter section in order to install driveways or sidewalk ramps. In order to accomplish this work, the Contractor shall employ one of the following methods:

1. Sawcut perpendicular to the flowline through the curb and gutter section at the limits of the section to be replaced, remove, and replace in entirety; or,

2. Saw through the curb section with the sawcut having a slope towards the gutter. At the face of the curb, the sawcut shall be flush with the gutter and at the back of the curb, one (1) inch above the gutter. Horizontal curb cut shall taper from sawcut to top of curb to establish wings in accordance with the City of Mesa's details for driveways and sidewalk ramps.

ZZZ. SPECIAL NOTICE REGARDING TECHNICAL SPECIFICATIONS FOR RUBBERIZED ASPHALTIC CONCRETE PAVEMENT:

For streets classified as "Arterial" within the City of Mesa, all new construction and overlays shall receive a surface asphalt course of rubberized asphalt in accordance with the current East Valley Asphalt Committee criteria. Street widening and trench patches shall match the existing arterial asphalt surface type.

Other street classifications designated to receive rubberized asphalt overlays will also use the current East Valley Asphalt Committee criteria.

The materials, mix design and installation of the rubberized asphalt shall comply with MAG Section 321 and 710 as amended by the City of Mesa.

AAAA. SPECIAL NOTICE REGARDING REQUIRED DETAILED SHOP DRAWINGS FOR SPECIALTY ITEMS:

This Special Notice applies to projects and permits that propose to use non-standard, specialty materials within City of Mesa rights-of-way or easements or for infrastructure that will be owned, operated or maintained by the City of Mesa. "Specialty materials" are defined as items, such as specialty streetlight poles, specialty streetlight fixtures or specialty street name signs, that are requested for aesthetic reasons and which are not on the City of Mesa's approved products lists or otherwise not fully in accordance with the City of Mesa's standard details and specifications. For such items, detailed shop drawings, including product data sheets, must be included and shown in the permit drawings and must be approved by the City of Mesa (including approval by the City of Mesa departments that own, operate or maintain such items) during the plan review process. For the submittal of some items (such as specialty streetlight poles), the City may also require the applicant to submit detailed structural design calculations sealed by a registered professional structural engineer properly licensed to practice in the State of Arizona. City approval of shop drawings and any required supporting structural calculations must be obtained prior to permit issuance. The permittee shall ensure that the materials delivered and installed in the field are in full compliance with the shop drawings and structural calculations approved by the City. The shop drawings must be shown in and remain a part of the approved building permit plan set that is used for construction, and shall remain in the engineer's certified as-built/record drawings that the permittee is required to submit upon completion of the project.

By way of clarification: Specialty items should be discussed with the City during the planning and zoning phases of a project and should not, without prior discussion or notice, be proposed in plans submitted for review. The City typically requires execution of a development agreement with the developer during the project planning phase to set forth the requirements for the installation and maintenance of specialty items before

such items may be proposed in a plan set or for a project. When specialty items are desired, the developer shall allot time for these activities in the planning phase. The City is not under any obligation to approve non-standard, specialty items.

The requirements of this section do not apply to capital improvement projects contracted and administered by the City of Mesa (e.g., where the City is the contracting agency).

Mesa Standard Details

Amendments to MAG Uniform Standard Details for Public Works Construction

mesa·az

ENGINEERING

2015

MESA STANDARD DETAILS
AVAILABLE ON-LINE
WWW.MESAAZ.GOV/ENGINEERING

EFFECTIVE DATE April 8, 2015

DETAIL NO.	SUBJECT
• M-1.01	SHEET INDEX TO MESA STANDARD DETAILS
• M-1.02	SHEET INDEX CONTINUED
• M-1.03	SHEET INDEX CONTINUED
• M-1.04	SHEET INDEX CONTINUED
• M-1.05	SHEET INDEX CONTINUED
• M-1.06	SHEET INDEX CONTINUED
• M-1.07	SHEET INDEX CONTINUED
M-15.01	SPEED HUMP AND SPEED CUSHION PAVEMENT MARKINGS
• M-15.02	14' AND 22' SPEED HUMP SPECIFICATIONS
• M-15.03	SPEED CUSHION SPECIFICATIONS - 34' STREET
• M-15.04	SPEED CUSHION SPECIFICATIONS - 40' STREET
• M-15.05	SPEED CUSHION SPECIFICATIONS - 44' STREET
• M-15.06	SPEED CUSHION SPECIFICATIONS - 48' STREET
M-16	RAISED MEDIAN OPENINGS
• M-18	ENGINEERED UTILITY BORES PERPENDICULAR TO CENTERLINE OF STREET
• M-18.01	ENGINEERED UTILITY BORES PARALLEL TO CENTERLINE OF STREET
• M-18.02	TEMPORARY POTHOLE PROTECTION IN ARTERIAL STREETS
• M-18.03	POTHOLE REPAIR DETAIL
• M-19.01	TYPICAL STREET SECTION
• M-19.02	TYPICAL PARTIAL STREET CROSS SECTION
• M-19.03	SUBURBAN RANCH STREET SECTION
• M-19.04.1	STANDARD TRENCH BACKFILL DETAIL ARTERIAL, COLLECTOR & LOCAL
• M-19.04.2	STANDARD TRENCH BACKFILL DETAIL - NOTES
M-19.05	STANDARD TRENCH BACKFILL DETAIL FOR TRENCHES WITHIN FUTURE
	ROADWAY PRISMS & ALLEYS
M-20.01.1	10" PUBLIC STREET NAME SIGN
M-20.01.2	10" PUBLIC STREET NAME SIGN - NOTES
M-20.02.1	12" PUBLIC STREET NAME SIGN

DETAIL NO.	SUBJECT
M-20.02.2	12" PUBLIC STREET NAME SIGN - NOTES
M-20.03	DEAD END STREET COMBINATION SIGN
M-20.04	DOUBLE STREET NAME SIGN
M-21.01	14" PRIVATE STREET NAME SIGN
M-21.02	16" PRIVATE STREET NAME SIGN
• M-21.03	STREET NAME SIGNS, ARTERIAL/COLLECTOR TO LOCAL
• M-21.04	STREET NAME SIGNS, LOCAL TO LOCAL
M-21.05	CONVENTIONAL METRO SIGNS ADDRESSING SCHEME
M-21.06	INTERNALLY ILLUMINATED STREET NAME SIGNS ADDRESSING SCHEME
M-21.07	CONVENTIONAL METRO AND INTERNALLY ILLUMINATED SIGNS
	STANDARD LAYOUT
M-21.08	CONVENTIONAL METRO AND INTERNALLY ILLUMINATED SIGNS
	DUAL NAME LAYOUT
M-22.01	TYPICAL SIGNING FOR ARTERIAL STREETS
• M-22.02	SIGN INSTALLATIONS ON STREET LIGHT POLES
• M-22.03	TYPICAL STREET NAME SIGN INSTALLATION LOCATION
M-23.01	OBJECT AND END OF ROAD MARKERS, CHEVRON
	AND DELINEATOR INSTALLATION
M-23.02	STANDARD CLEARANCE FOR WARNING SIGNS
• M-23.03	VARIOUS SIGN INSTALLATIONS
M-23.04	STANDARD CLEARANCES AND LOCATION FOR STOP SIGNS
M-23.05	GUIDELINES FOR ADVANCE PLACEMENT OF WARNING SIGNS
M-23.06	STANDARD HANDICAP PARKING SIGN AND MARKINGS
M-23.07	SIGN HEIGHTS IN PARKING LOTS
M-23.08	NOT USED
M-23.09	NOT USED
M-24.01	BUSINESS NAME SIGN

• DENOTES DETAILS REVISED FOR 2015 PUBLICATION.

mesa·az

SHEET INDEX TO MESA STANDARD DETAILS

DETAIL NO.
M-1.01

REV. 04/07/2015

DETAIL NO.	SUBJECT
M-24.02	COMBINED BUSINESS NAME SIGNS
M-24.03	PROJECT NOTIFICATION SIGN FOR DEVELOPMENT & NON-CITY UTILITIES
M-25	ACCESSIBLE & VAN ACCESSIBLE PARKING SIGNS
• M-26	SUBTRACTIVE METER
• M-27.01.1	FIRE-RATED WATER METER ASSEMBLY, 4" AND LARGER
• M-27.01.2	FIRE-RATED WATER METER ASSEMBLY, 4" AND LARGER - NOTES
• M-27.02.1	MANIFOLDED 6" WATER METER ASSEMBLY
• M-27.02.2	MANIFOLDED 6" WATER METER ASSEMBLY - NOTES
• M-28.01.1	NON-FIRE-RATED WATER METER ASSEMBLY, 4" AND 6"
• M-28.01.2	NON-FIRE-RATED WATER METER ASSEMBLY, 4" AND 6" - NOTES
• M-28.02	PARALLEL 2" WATER METERS FOR 3" WATER SERVICES
• M-29	1 1/2" & 2" APPROVED WATER METERS
M-30.01	SPECIAL WATER METER VAULT FOR BURIED METERS
	3" OR LARGER
M-30.02	WATER METER VAULT DIMENSIONS FOR BURIED METERS
	3" & LARGER
• M-31.01	REDUCED PRESSURE PRINCIPLE BACKFLOW PREVENTION ASSEMBLY,
	2 1/2" AND LARGER
• M-31.02	DOUBLE CHECK VALVE BACKFLOW PREVENTION ASSEMBLY,
	2 1/2" AND LARGER
M-31.03	REDUCED PRESSURE PRINCIPLE BACKFLOW PREVENTION ASSEMBLY,
	2 INCHES AND LESS
M-31.04	DOUBLE CHECK VALVE BACKFLOW PREVENTION ASSEMBLY;
	FOR ASSEMBLIES 2 INCHES & LESS
M-31.05	PRESSURE VACUUM BREAKER ASSEMBLY, 2" AND LESS
M-31.06	CHECK VALVE ASSEMBLIES FOR FIRE PROTECTION SYSTEMS
• M-31.07	FIRE LINES TO PRIVATE PROPERTY
M-32	GUARD POST FOR BACKFLOW PREVENTION DEVICES
M-33	FLUME VAULT STRUCTURE
M-34	GASKETED SEWER FITTINGS
M-35	CONTROL MANHOLE

DETAIL NO.	SUBJECT
M-36.01.1	GREASE, OIL AND SAND INTERCEPTOR - SINGLE MANHOLE
M-36.01.2	GREASE, OIL AND SAND INTERCEPTOR - TWO MANHOLES
M-36.02	LINT INTERCEPTOR
M-36.03	INDUSTRIAL WASTE INTERCEPTOR
M-37.01	BACKFLOW PROTECTION FOR TANK TRUCKS
M-37.02	AIR GAP BACKFLOW PROTECTION FOR WATER TANKS
M-38.01	2" AIR/VACUUM RELEASE VALVE
• M-38.02	AIR/VACUUM RELEASE VALVE - 4" & 6"
M-38.03	ARV/WV MARKER DETAIL
M-39	SIGN POST INSTALLATION (SQUARE TUBING)
M-40.01	RESIDENTIAL DRIVEWAY ENTRANCE - TYPE 1
	(SIDEWALK ADJACENT TO CURB)
M-40.02	RESIDENTIAL DRIVEWAY ENTRANCE - TYPE 2
	(DETACHED SIDEWALK)
M-40.03	RESIDENTIAL DRIVEWAY ENTRANCE - RETROFIT ONLY
• M-42	COMMERCIAL, INDUSTRIAL AND APARTMENT DRIVEWAY DETAIL
	- DETACHED SIDEWALK
M-42.01	TYPICAL DRIVEWAY ACCESS TO PRIVATE GATED COMMUNITY
	WITHOUT MAILBOX AREA
M-42.02	TYPICAL DRIVEWAY ACCESS TO PRIVATE GATED COMMUNITY
	WITH MAILBOX AREA
M-42.03	COMMERCIAL, INDUSTRIAL AND APARTMENT DRIVEWAY DETAIL
	- SIDEWALK ADJACENT TO CURB
M-43	DETACHED SIDEWALK ON ARTERIAL AND COLLECTOR STREETS
M-44.01.1	RETROFIT ADA PUSH BUTTON ACCESS PAD DETAILS
M-44.01.2	RETROFIT ADA PUSH BUTTON ACCESS PAD DETAILS
M-44.02.1	SIDEWALK RAMPS - TYPE A
M-44.02.2	SIDEWALK RAMPS - TYPE A - NOTES
M-44.03	SIDEWALK RAMPS - TYPE B
M-44.04	(NOT USED)

• DENOTES DETAILS REVISED FOR 2015 PUBLICATION.

mesa·az

SHEET INDEX CONTINUED

DETAIL NO.
M-1.02

REV. 04/07/2015

DETAIL NO.	SUBJECT
• M-44.05	SIDEWALK RAMPS - TYPE D
M-44.06	RETROFIT EXISTING RAMP WITH DETECTABLE WARNING SURFACE
• M-45.01.1	BUS PULLOUT DETAIL
• M-45.01.2	BUS SHELTER PULLOUT DETAIL-ALTERNATIVE
• M-45.02.1	STANDARD BUS SHELTER - FLOOR PLAN
M-45.02.2	STANDARD BUS SHELTER - ROOF PLAN
• M-45.02.3	STANDARD BUS SHELTER - ELEVATIONS AND NOTES
• M-45.03.1	STANDARD BUS SHELTER - STRUCTURAL DETAILS
• M-45.03.2	STANDARD BUS SHELTER - STRUCTURAL DETAILS
• M-45.03.3	STANDARD BUS SHELTER - STRUCTURAL DETAILS
• M-45.04.1	STANDARD BUS SHELTER - ROOF & FRAME SECTIONS
• M-45.04.2	STANDARD BUS SHELTER - ROOF & FRAME SECTIONS
• M-45.05.1	STANDARD BUS SHELTER - MISCELLANEOUS DETAILS
• M-45.05.2	STANDARD BUS SHELTER - MISCELLANEOUS DETAILS
M-45.06	STANDARD BUS SHELTER - SUN SCREEN DETAILS
• M-45.07.1	STANDARD BUS SHELTER - SUN SCREEN DETAILS
• M-45.07.2	STANDARD BUS SHELTER - SUN SCREEN DETAILS
• M-45.07.3	STANDARD BUS SHELTER - SUN SCREEN DETAILS
• M-45.07.4	STANDARD BUS SHELTER - SUN SCREEN DETAILS
• M-45.08	BUS STOP PAD DETAIL
M-46.01.1	ARTERIAL STREET INTERSECTION (4 LANES) WITH 4' RAISED MEDIANS
M-46.01.2	ARTERIAL STREET INTERSECTION (4 LANES) WITH 8' RAISED MEDIANS
M-46.01.3	ARTERIAL STREET INTERSECTION (4 LANES) - RAISED MEDIAN/CROSSWALK DETAIL
M-46.02	ARTERIAL STREET INTERSECTION (4 LANES) WITH STRIPED MEDIANS
M-46.03.1	ARTERIAL STREET INTERSECTION (6 LANES) WITH 4' RAISED MEDIANS
M-46.03.2	ARTERIAL STREET INTERSECTION (6 LANES) WITH 8' RAISED MEDIANS
M-46.04	ARTERIAL STREET INTERSECTION (6 LANES) WITH STRIPED MEDIANS
M-46.05.1	TRANSITION FROM STRIPED TO 4' RAISED MEDIAN

DETAIL NO.	SUBJECT
M-46.05.2	TRANSITION FROM STRIPED TO 8' RAISED MEDIAN
M-46.07	TYPICAL INTERSECTION APPROACH STRIPING
• M-47.01	RIGHT TURN LANE TREATMENTS
• M-47.02	RIGHT TURN TRAP LANE TREATMENTS
M-47.03	TYPICAL APPLICATION OF PAVEMENT ARROWS
M-47.04	DUAL LEFT TURN LANE EXTENSIONS
• M-47.05	TYPICAL BIKE LANE LAYOUTS
• M-49.01	WATER SERVICE INSTALLATION
• M-49.02	WATER SERVICE INSTALLATION MATERIALS LIST
• M-49.03	SINGLE AND MANIFOLD WATER METER INSTALLATIONS
• M-50	WATER LINE CUT AND PLUG FOR 12" DIAMETER MAIN AND SMALLER
• M-51	WATER VALVE ABANDONMENT
• M-52	ACP TO DIP TEE CUT IN
• M-53	WATER & SEWER SERVICE STANDARDS FOR RESIDENTIAL SMALL LOT/MULTI-LOT PRIVATE DRIVE DEVELOPMENTS
• M-55	STEEL CASING PIPE INSTALLATION DETAIL FOR WATER MAINS
• M-58	JOINT USE WATER AND GAS TRENCH DETAIL
• M-60	TYPICAL UTILITY CROSSINGS
• M-61	DELINEATOR
• M-62.01	STANDARDS FOR SOLID WASTE VEHICLE ACCESS
M-62.02.1	SINGLE AND DOUBLE-WIDE BIN ENCLOSURES
• M-62.02.2	SINGLE AND DOUBLE-WIDE BIN ENCLOSURES - NOTES
• M-62.03	TRIPLE-WIDE BIN ENCLOSURES
M-62.04.1	BIN ENCLOSURE SCREEN WALL, SAFETY POST AND GATE STANDARDS
M-62.04.2	BIN ENCLOSURE SCREEN WALL, SAFETY POST AND GATE STANDARDS - NOTES
M-62.05	STORAGE AREA SCREEN WALLS - BARREL SERVICE
• M-62.06	RESIDENTIAL SOLID WASTE GUIDELINES
• M-62.07	LARGE COMPACTOR REFUSE AREA
M-64	DOUBLE CATCH BASIN PER MAG DETAIL 534, TYPE E

• DENOTES DETAILS REVISED FOR 2015 PUBLICATION.

mesa·az

SHEET INDEX CONTINUED

DETAIL NO.
M-1.03

REV. 04/07/2015

DETAIL NO.	SUBJECT
M-65	SAFETY RAILING DETAILS
• M-66.01	FIBER OPTIC MANHOLE
• M-66.02	FIBER OPTIC MANHOLE FRAME AND COVER
• M-66.03	FIBER OPTIC TEST POINT DETAIL
• M-66.04	FIBER OPTIC VAULT/MANHOLE KNOCKOUT DETAIL
• M-66.05	FIBER OPTIC CABLE & SPLICE CLOSURE RACKING - PLAN
• M-66.06	FIBER OPTIC CABLE & SPLICE CLOSURE RACKING - PERSPECTIVE
• M-66.07.1	STANDARD FIBER OPTIC CABLE INSTALLATION PULL BOX
• M-66.07.2	STANDARD FIBER OPTIC CABLE INSTALLATION PULL BOX
• M-66.08.1	MICRODUCT INSTALLATION IN PULL BOXES
• M-66.08.2	MICRODUCT INSTALLATION IN PULL BOXES
• M-66.09.1	STANDARD FIBER OPTIC TRENCHING AND DUCT BANK INSTALLATION
• M-66.09.2	STANDARD FIBER OPTIC DUCT BANK CONFIGURATIONS
• M-66.10.1	BUNDLED MICRODUCT CONDUIT INSTALLATION
• M-66.10.2	STANDARD BUNDLED MICRODUCT CONFIGURATION
M-66.11	FIBER OPTIC MARKER POST
• M-66.12	FIBER OPTIC CABLE SPOOL LENGTH PER JUNCTION STRUCTURE
• M-70	STREETLIGHT WORK PROCEDURES
M-70.01.1	STREETLIGHT LUMINAIRE SPECIFICATION
• M-70.01.2	STREETLIGHT LUMINAIRE SPECIFICATION
M-70.01.3	STREETLIGHT LUMINAIRE SPECIFICATION
M-70.02.1	TOWN CENTER DECORATIVE
• M-70.02.2	TOWN CENTER DECORATIVE
M-70.03.1	TOWN CENTER DECORATIVE STREETLIGHT LUMINAIRE SPECIFICATION
• M-70.03.2	TOWN CENTER DECORATIVE STREETLIGHT LUMINAIRE SPECIFICATION
M-71	HIGH PRESSURE SODIUM LAMP SPECIFICATION
M-72	TIME DELAY PHOTO ELECTRONIC CONTROL SPECIFICATION
• M-73.01.1	STEPPED STREETLIGHT POLE SPECIFICATION
• M-73.01.2	STEPPED STREETLIGHT POLE SPECIFICATION
• M-73.01.3	STEPPED STREETLIGHT POLE SPECIFICATION

DETAIL NO.	SUBJECT
• M-73.02.1	TAPERED STREETLIGHT POLE SPECIFICATION
• M-73.02.2	TAPERED STREETLIGHT POLE SPECIFICATION
• M-73.02.3	TAPERED STREETLIGHT POLE SPECIFICATION
• M-73.03.1	DAVIT STREETLIGHT POLE SPECIFICATION
• M-73.03.2	DAVIT STREETLIGHT POLE SPECIFICATION
• M-73.03.3	DAVIT STREETLIGHT POLE SPECIFICATION
M-73.04.1A	SQUARE STREETLIGHT POLE SPECIFICATION
M-73.04.1B	SQUARE STREETLIGHT POLE SPECIFICATION
• M-73.04.1C	SQUARE STREETLIGHT POLE SPECIFICATION
M-73.04.2A	SQUARE STREETLIGHT ASU BANNER POLE SPECIFICATION (P-421)
M-73.04.2B	SQUARE STREETLIGHT ASU BANNER POLE SPECIFICATION (P-421)
• M-73.04.3	FOUNDATION DETAIL FOR ASU BANNER POLE (P-421)
M-73.05.1	TOWN CENTER DECORATIVE STREETLIGHT POLE SPECIFICATION
M-73.05.2	TOWN CENTER DECORATIVE STREETLIGHT POLE SPECIFICATION
M-73.05.3	TOWN CENTER DECORATIVE STREETLIGHT POLE SPECIFICATION
• M-73.06.1	ANCHOR BOLT & COPPER GROUNDING PLATE SPECIFICATION
M-73.06.2	ANCHOR BOLT & COPPER GROUNDING PLATE SPECIFICATION
• M-73.07	CURRENT CARRYING AND GROUNDING SPECIFICATION
M-74.01	PULL AND JUNCTION BOX SPECIFICATION
M-74.02.1	PULL AND JUNCTION BOX INSTALLATION SPECIFICATION
M-74.02.2	PULL AND JUNCTION BOX INSTALLATION SPECIFICATION
• M-75.01.1A	C-103 LIGHTING CONTROL CABINET SPECIFICATION
• M-75.01.1B	C-103 WIRING DIAGRAM
• M-75.01.1C	C-103 CABINET REQUIREMENTS
M-75.01.2A	C-113 LIGHTING CONTROL CABINET DETAIL
M-75.01.2B	C-113 CABINET INTERIOR COMPONENTS
• M-75.01.2C	C-113 WIRING DIAGRAM
M-75.01.2D	C-113 LIGHTING CONTROL CABINET SPECIFICATION
M-75.02.1	LIGHTING CONTROL CABINET PAD SPECIFICATION AND INSTALLATION

• DENOTES DETAILS REVISED FOR 2015 PUBLICATION.

mesa·az

SHEET INDEX CONTINUED

DETAIL NO.
M-1.04

DETAIL NO.	SUBJECT
M-75.02.2	LIGHTING CONTROL CABINET PAD SPECIFICATION AND INSTALLATION
M-75.02.3	LIGHTING CONTROL CABINET PAD SPECIFICATION AND INSTALLATION
• M-75.03	240V SINGLE PHASE SERVICE POD / POS/ LCC & GROUNDING
• M-75.04	120V SINGLE PHASE SERVICE POD / POS & GROUNDING
• M-76.01	STREETLIGHT FOUNDATION SPECIFICATION
M-76.02	STREETLIGHT FOUNDATION INSTALLATION SPECIFICATION
M-78.01	TWIN DAVIT STREETLIGHT POLE SPECIFICATION
M-78.02	T SERIES STREETLIGHT POLE SPECIFICATION
M-78.03	SMALL TAPERED STREETLIGHT POLE SPECIFICATION
M-78.04	TOWN CENTER DECORATIVE PEDESTRIAN POLE SPECIFICATION
M-79.01	MAST ARM AND ADAPTOR PLATES TO RAISE LUMINAIRES ON
	TRAFFIC SIGNAL POLES
M-80.01	PARK LIGHTING LUMINAIRE SPECIFICATION
M-83.01	SMALL EMBEDDED OCTAGONAL CONCRETE POLE SPECIFICATION
M-83.02	MEDIUM EMBEDDED OCTAGONAL CONCRETE POLE SPECIFICATION
M-83.03	BASE MOUNTED OCTAGONAL CONCRETE POLE SPECIFICATION
• M-85.01	OUTDOOR CONVENIENCE RECEPTACLE SPECIFICATION
• M-90.01	ITS/TRAFFIC SIGNAL GENERAL NOTES I
• M-90.02	ITS/TRAFFIC SIGNAL GENERAL NOTES II
• M-90.03	ITS/TRAFFIC SIGNAL GENERAL NOTES III
• M-90.04	TRAFFIC SIGNAL CONSTRUCTION PROCEDURES I
• M-90.05	TRAFFIC SIGNAL CONSTRUCTION PROCEDURES II
• M-91.01	TRAFFIC SIGNAL FULLY METERED SERVICE PEDESTAL
M-91.02	TRAFFIC SIGNAL SPLIT SERVICE PEDESTAL
• M-92.01	TRAFFIC SIGNAL CABINET FOUNDATION
M-92.02	TRAFFIC SIGNAL U.P.S. FOUNDATION
• M-92.03	POLE, PULL BOX & FOUNDATION GROUNDING
• M-93.01	TRAFFIC SIGNAL PULL BOX INSTALLATION

DETAIL NO.	SUBJECT
M-93.02	TRAFFIC SIGNAL FIBER OPTIC INSTALLATION
M-93.03	FIBER OPTIC TRUNK LINE CONDUIT INSTALLATION DETAILS
M-93.04	CONDUIT LAYOUT FOR FUTURE TRAFFIC SIGNALS
M-94.01	BICYCLE / PEDESTRIAN POLE
M-94.02	BIKE PUSH BUTTON INSTALLATION
M-94.03	TRAFFIC SIGNAL POLE - TYPE "A"
M-94.04	TRAFFIC SIGNAL POLES
M-94.05	TRAFFIC SIGNAL POLE DETAILS
• M-94.06	TRAFFIC SIGNAL POLE NOTES
M-94.07	TRAFFIC SIGNAL POLE - TYPE “ITS” POLE 65'
M-94.08	TRAFFIC SIGNAL POLE - TYPE “ITS” POLE - NOTES
• M-94.09	3-ANTENNA CLAMP ASSEMBLY FOR 65' ITS POLE
• M-94.10	TRAFFIC SIGNAL MAST ARM PELCO MOUNT
M-94.11	NOT USED
M-94.12	NOT USED
M-94.13	NOT USED
M-95.01	SIGNAL POLE DRILLING DETAIL
• M-95.02	SIGNAL HEAD ASSEMBLY
• M-95.03	TYPE "S" CLUSTER HEAD
M-95.04	TYPE "T" CLUSTER HEAD
M-95.05	TYPE “S” AND “T” CLUSTER HEAD NOTES
• M-95.06	PEDESTRIAN PUSH BUTTON STATION
M-95.07	LED ILLUMINATED STREET NAME SIGN SUPPORT STRUCTURE
M-95.08	LED ILLUMINATED STREET NAME SIGN DIMENSIONS
M-95.09	LED ILLUMINATED STREET NAME SIGN SUPPORT STRUCTURE NOTES
• M-95.10	CCTV CAMERA INSTALLATION DETAIL
• M-95.11	VARIOUS COMMUNICATION DEVICE INSTALLATION DETAILS
• M-96.01	DETECTOR LOOP INSTALLATION DETAILS

• DENOTES DETAILS REVISED FOR 2015 PUBLICATION.

mesa·az

SHEET INDEX CONTINUED

DETAIL NO.
M-1.05

REV. 04/07/2015

DETAIL NO.	SUBJECT
M-96.02	DETECTOR LOOP INSTALLATION NOTES
M-96.03	DETECTOR LOOP LAYOUT
M-96.04	DETECTOR LOOP STUBOUT
• M-96.05	VIDEO DETECTION CAMERA INSTALLATION
M-97.01	25 CONDUCTOR CABLE ID CODING
• M-97.02	25 CONDUCTOR CABLE GENERAL NOTES
M-97.03	25 CONDUCTOR CABLE #1
M-97.04	25 CONDUCTOR CABLE #2
• M-97.05	25 CONDUCTOR CABLE #1 & #2 GENERAL NOTES
• M-97.06	CONDUCTORS IN TRAFFIC SIGNAL POLES
• M-99.01	PUSH BUTTON STATION SIGNS
M-99.02	BICYCLE PUSH BUTTON STATION SIGNS
• M-102	SURFACE SELECT GRANITE BOULDER
M-103.01	PLANTING NOTES
• M-103.02	TREE PLANTING DETAIL IN TURF AREAS
• M-103.03	TREE PLANTING IN DECOMPOSED GRANITE AREAS
• M-103.04	TREE PLANTING ON SLOPE
• M-103.05	ACCENT SHRUB PLANTING DETAIL
• M-103.06	SHRUB PLANTING DETAIL
M-103.07	GROUND COVER IN MASS PLANTING AREAS
M-103.08	SAGUARO PLANTING DETAIL
M-103.09	OCOTILLO PLANTING DETAIL
M-104.01	CONTROLLER SCHEDULE BY DEPARTMENT
• M-104.02	SCHEMATIC IRRIGATION LAYOUT - BATTERY IRRIGATION CONTROLLER
• M-104.03	SCHEMATIC IRRIGATION LAYOUT - IRRIGATION WITH FLOW CONTROL

DETAIL NO.	SUBJECT
• M-104.04	SCHEMATIC IRRIGATION LAYOUT - STANDARD CONTROLLER WITHOUT FLOW CONTROL
• M-104.05	SCHEMATIC IRRIGATION LAYOUT - MOTOROLA CONTROLLER
• M-104.06	ALEX-TRONIX CONTROLLER AND ENCLOSURE
M-104.07	CALSENSE ET2000 CONTROLLER AND ENCLOSURE
M-104.08	LIGHT ENERGIZED IRRIGATION CONTROLLER (LEIT)
M-104.09	MOTOROLA IRRINET CONTROLLER
M-104.10	MOTOROLA SCORPIO CONTROLLER
M-104.11	IRRIGATION CONTROLLER SECURITY CAGE ON CONCRETE SLAB
M-105.01	REDUCED PRESSURE BACKFLOW PREVENTION ASSEMBLY - 2" AND SMALLER
M-105.02	REDUCED PRESSURE BACKFLOW PREVENTION ASSEMBLY ENCLOSURE - 2" AND SMALLER
M-105.03	REDUCED PRESSURE BACKFLOW PREVENTION ASSEMBLY ENCLOSURE - 2 1/2" AND LARGER
M-105.04	BERMAD 910-P-MASTER VALVE / FLOW SENSOR ASSEMBLY
M-105.05	CALSENSE MASTER VALVE / FLOW SENSOR
M-105.06	QUICK COUPLER DETAIL
M-105.07	BRASS GATE VALVE ASSEMBLY INSTALLED WITH SOLVENT WELD PVC PIPE
M-105.08	GATE VALVE ASSEMBLY INSTALLED WITH RUBBER RING PIPE
M-106.01	TYPICAL TRENCHING DETAIL
• M-106.02	TYPICAL THRUST BLOCK DETAILS
M-106.03	TYPICAL WIRE CONNECTION DETAIL
M-106.04	IRRIGATION LEGEND
M-106.05	FRICTION LOSS CALCULATIONS

• DENOTES DETAILS REVISED FOR 2015 PUBLICATION.

mesa·az

SHEET INDEX CONTINUED

DETAIL NO.
M-1.06

REV. 04/07/2015

DETAIL NO.	SUBJECT
M-107.01	VALVE MANIFOLD DETAIL
M-108.01	DRIP VALVE WITH FILTER AND PRESSURE REGULATOR ASSEMBLY
M-108.02	DRIP SYSTEM - EMITTER DETAIL
M-108.03	DRIP SYSTEM - MANUAL FLUSH END CAP ASSEMBLY
M-108.04	20-25 PSI EMITTER SCHEDULE
M-109.01	REMOTE CONTROL VALVE ASSEMBLY
M-109.02	SPRINKLER HEAD WITH SWING JOINT ASSEMBLY
M-109.03	SPRINKLER HEAD SPACING DETAIL
M-110.01	TREE BUBBLER ASSEMBLY
M-111.01	APPROACH WALK
M-111.02	WALKWAY DETAIL
M-111.03	CONCRETE TURNDOWN - TYPICAL PARK APPLICATION
M-111.04	CONTRACTION JOINT - TYPICAL
M-111.05	EXPANSION JOINT - TYPICAL
• M-111.06	TYPICAL WALKWAY WITH 4" IRRIGATION TILES - FLOOD IRRIGATION APPLICATION
• M-111.07	DECOMPOSED GRANITE AT CONCRETE
• M-111.08	12" CONCRETE HEADER CURB DETAIL
M-111.09	MEDIAN CONCRETE PAVER DETAIL
• M-111.10	PLAYGROUND ADA ACCESS RAMP

• DENOTES DETAILS REVISED FOR 2015 PUBLICATION.

mesa·az

SHEET INDEX CONTINUED

DETAIL NO.
M-1.07

NOTES

1. EACH SPEED HUMP OR CUSHION SHALL HAVE TWO MARKINGS FOR EACH DIRECTION OF TRAVEL. ONE MARKING SHALL BE LOCATED ON THE APPROACH SIDE OF THE HUMP/CUSHION, AND ONE SHALL BE LOCATED ON THE DEPARTURE SIDE OF THE HUMP/CUSHION.
2. ALL CHEVRON STRIPES SHALL BE ONE FOOT IN WIDTH.
3. WHERE LANE STRIPING IS PRESENT, THE MARKINGS SHALL ALIGN WITH THE CENTER OF THE THROUGH TRAFFIC LANE.
4. ALL SPEED HUMPS AND CUSHIONS IN THE CITY OF MESA SHALL USE PREFORMED PAVEMENT MARKINGS - TYPE I (PERMANENT), IN ACCORDANCE WITH THE LATEST ARIZONA DEPARTMENT OF TRANSPORTATION STANDARD SPECIFICATIONS FOR ROAD AND BRIDGE CONSTRUCTION SECTION 705, PREFORMED PAVEMENT MARKINGS - TYPE I (PERMANENT).
5. SEE COM DETAIL M-15.02 FOR SPEED HUMP LAYOUT AND SPECIFICATIONS. SEE COM DETAILS M-15.03 THROUGH M-15.06 FOR SPEED CUSHION LAYOUT AND SPECIFICATIONS.

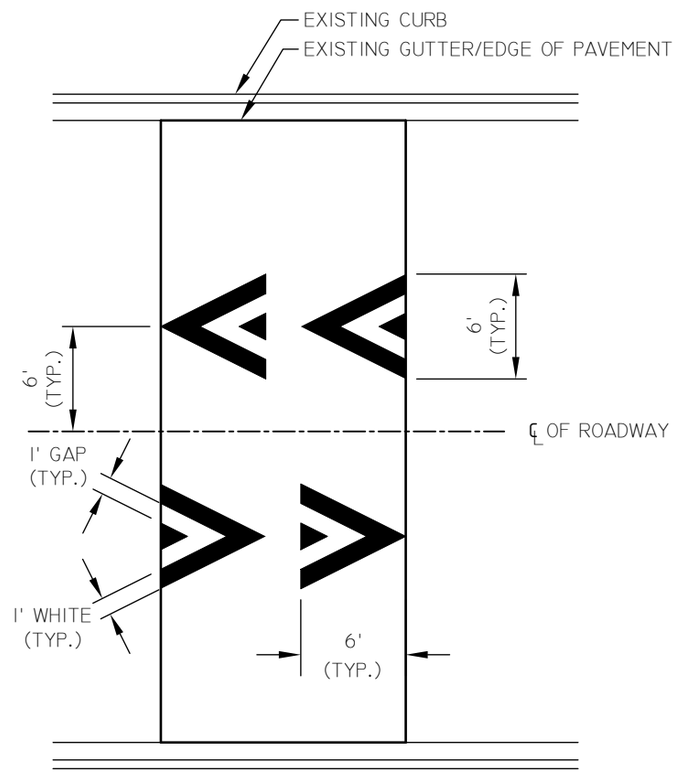

SPEED HUMPS

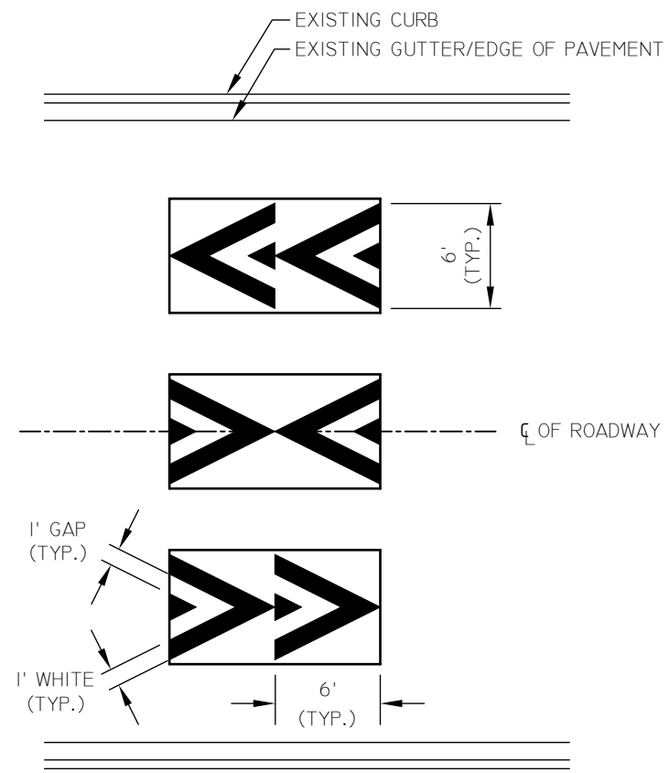

SPEED CUSHIONS

NOT TO SCALE

mesa·az

SPEED HUMP AND SPEED CUSHION PAVEMENT MARKINGS

DETAIL NO. M-15.01

REV. 01/31/14

NOTES

1. SPEED HUMPS SHALL NOT BE PLACED OVER MANHOLES, WATER VALVES, SURVEY MONUMENTS, ETC.
2. SPEED HUMPS SHALL NOT BE INSTALLED IN A LOCATION SUCH THAT DRAINAGE IS COMPROMISED.
3. SPEED HUMPS SHALL BE CONSTRUCTED WITH TYPE R-1/2" ASPHALT MIX PER THE LASTEST EAST VALLEY ASPHALT (EVA) CRITERIA AND BE APPROVED BY EVA COMMITTEE. A TACK COAT SHALL BE APPLIED PRIOR TO APPLICATION OF PAVEMENT MATERIAL.
4. SPEED HUMPS TO BE 3" IN HEIGHT TO PROVIDE MAXIMUM EFFECTIVENESS, WHILE NOT BEING OVERLY RESTRICTIVE TO EMERGENCY POLICE AND FIRE VEHICLES.
5. STRIPING TO BE INSTALLED PER COM DETAIL M-15.01. BECAUSE THE WIDTHS OF STREETS VARY, SPEED HUMPS MAY REQUIRE ADDITIONAL MARKINGS. CONSULT TRAFFIC STUDIES STAFF AT 480-644-2160 FOR STREET WIDTHS GREATER THAN 40 FEET.
6. CONTACT THE CITY OF MESA SIGN SHOP AT 480-644-3175 TWO WEEKS PRIOR TO INSTALLATION TO COORDINATE PLACEMENT OF ADVANCE WARNING SIGNS.

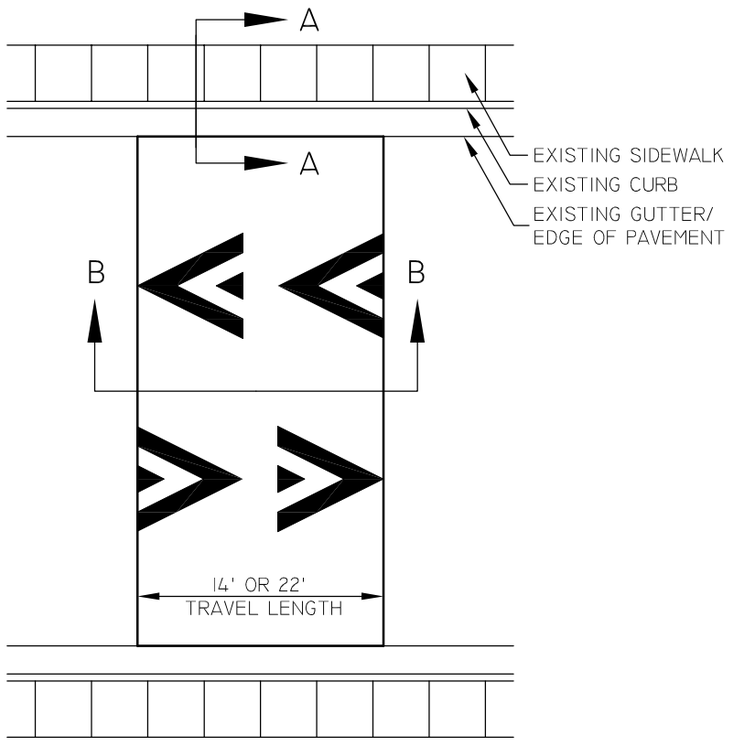

PLAN VIEW

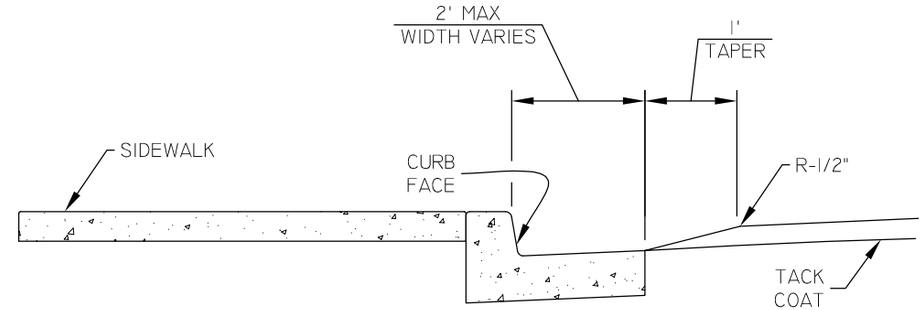

SECTION A-A

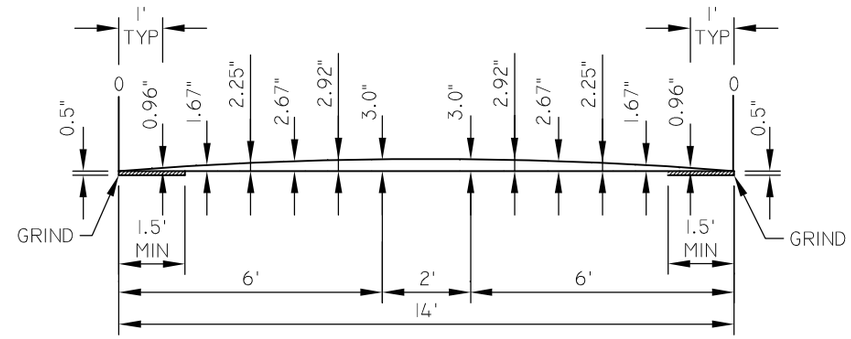

SECTION B-B
14' TRAVEL LENGTH - FOR 25 MPH STREETS

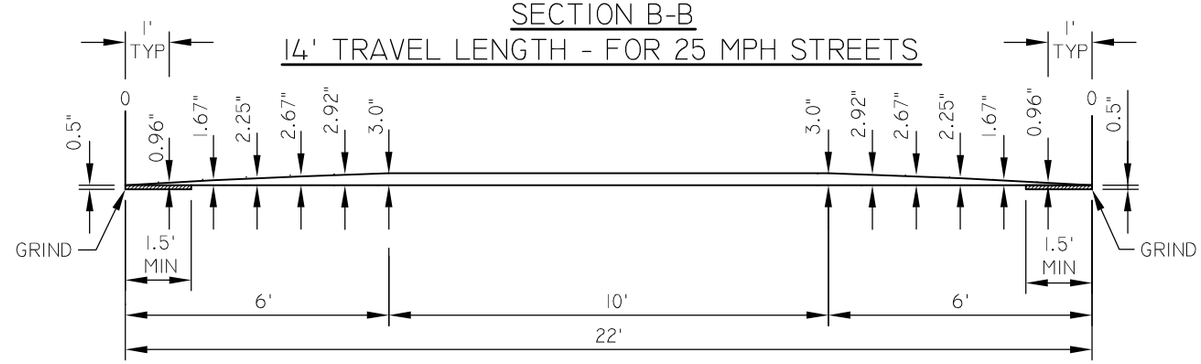

SECTION B-B
22' TRAVEL LENGTH - FOR 30 MPH STREETS

NOT TO SCALE

mesa·az

14' AND 22' SPEED HUMP SPECIFICATIONS

DETAIL NO.
M-15.02

REV. 02/11/2015

NOTES

1. SPEED CUSHIONS SHALL NOT BE PLACED OVER MANHOLES, WATER VALVES, SURVEY MONUMENTS, ETC.
2. SPEED CUSHIONS SHALL NOT BE INSTALLED IN A LOCATION SUCH THAT DRAINAGE IS COMPROMISED.
3. SPEED CUSHIONS SHALL BE CONSTRUCTED WITH TYPE R-1/2" ASPHALT MIX PER THE CURRENT EAST VALLEY ASPHALT (EVA) CRITERIA AND BE APPROVED BY EVA COMMITTEE. A TACK COAT SHALL BE APPLIED PRIOR TO APPLICATION OF PAVEMENT MATERIAL.
4. SPEED CUSHIONS TO BE 3" IN HEIGHT TO PROVIDE MAXIMUM EFFECTIVENESS, WHILE NOT BEING OVERLY RESTRICTIVE TO EMERGENCY POLICE AND FIRE VEHICLES.
5. STRIPING TO BE INSTALLED PER M-15.01. BECAUSE THE WIDTHS OF STREETS VARY, THE SPEED CUSHION LAYOUT MAY REQUIRE ADJUSTMENTS. CONSULT TRAFFIC STUDIES STAFF AT 480-644-2160 FOR STREET WIDTHS NOT SPECIFIED IN COM DETAILS M-15.03 THROUGH M-15.06.
6. CONTACT THE CITY OF MESA SIGN SHOP AT 480-644-3175 TWO WEEKS PRIOR TO INSTALLATION TO COORDINATE PLACEMENT OF ADVANCE WARNING SIGNS.

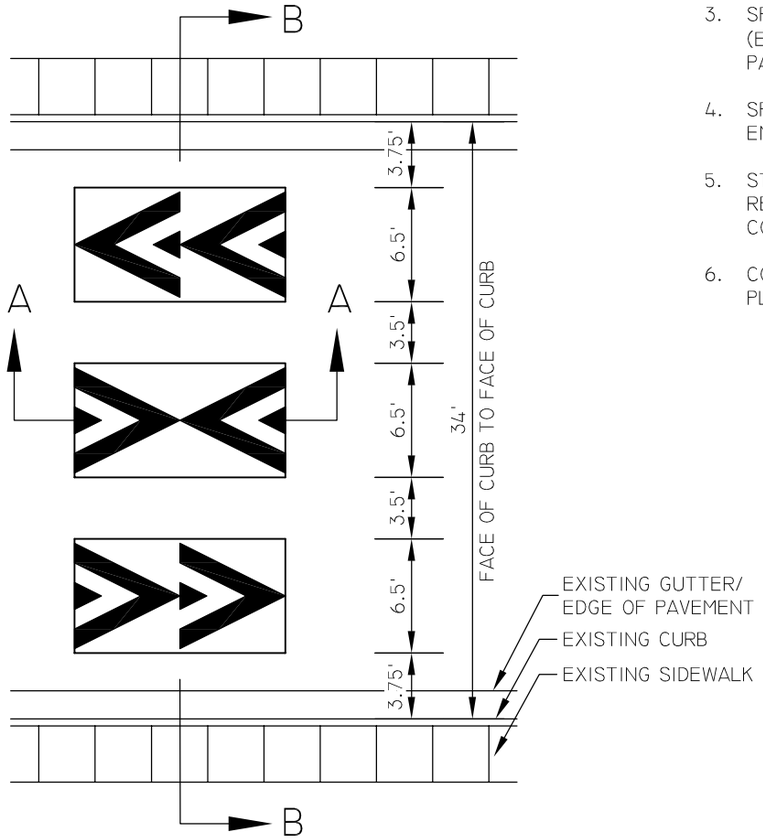

PLAN VIEW

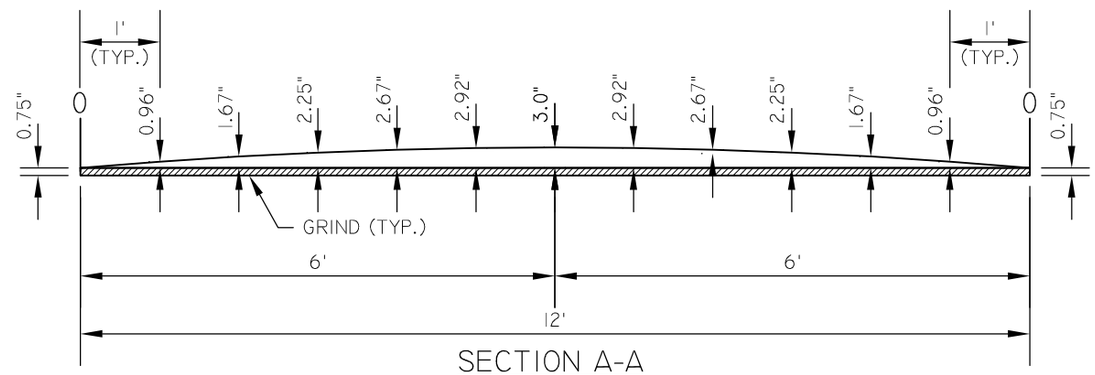

SECTION A-A

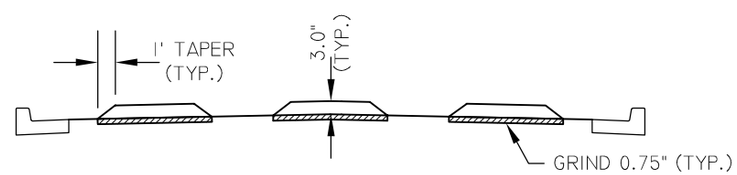

SECTION B-B

NOT TO SCALE

mesa·az

SPEED CUSHION SPECIFICATIONS - 34' STREET

DETAIL NO.
M-15.03

REV. 02/11/2015

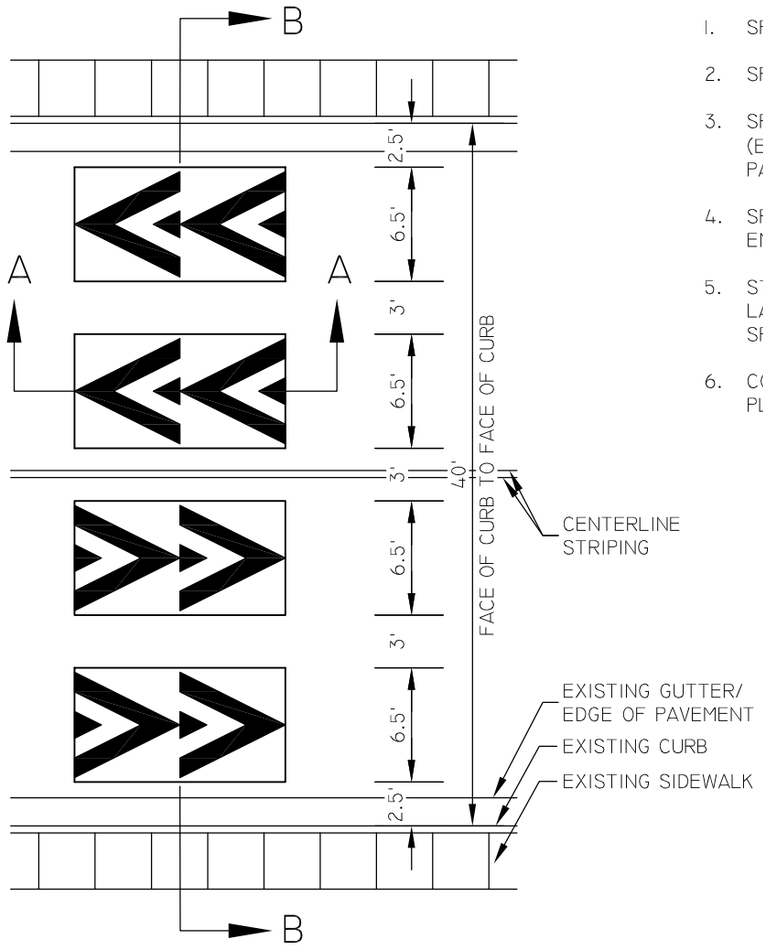

PLAN VIEW

NOTES

1. SPEED CUSHIONS SHALL NOT BE PLACED OVER MANHOLES, WATER VALVES, SURVEY MONUMENTS, ETC.
2. SPEED CUSHIONS SHALL NOT BE INSTALLED IN A LOCATION SUCH THAT DRAINAGE IS COMPROMISED.
3. SPEED CUSHIONS SHALL BE CONSTRUCTED WITH TYPE R-1/2" ASPHALT MIX PER THE CURRENT EAST VALLEY ASPHALT (EVA) CRITERIA AND BE APPROVED BY EVA COMMITTEE. A TACK COAT SHALL BE APPLIED PRIOR TO APPLICATION OF PAVEMENT MATERIAL.
4. SPEED CUSHIONS TO BE 3" IN HEIGHT TO PROVIDE MAXIMUM EFFECTIVENESS, WHILE NOT BEING OVERLY RESTRICTIVE TO EMERGENCY POLICE AND FIRE VEHICLES.
5. STRIPING TO BE INSTALLED PER COM DETAIL M-15.01. BECAUSE THE WIDTHS OF STREETS VARY, THE SPEED CUSHION LAYOUT MAY REQUIRE ADJUSTMENTS. CONSULT TRAFFIC STUDIES STAFF AT 480-644-2160 FOR STREET WIDTHS NOT SPECIFIED IN COM DETAILS M-15.03 THROUGH M-15.06.
6. CONTACT THE CITY OF MESA SIGN SHOP AT 480-644-3175 TWO WEEKS PRIOR TO INSTALLATION TO COORDINATE PLACEMENT OF ADVANCE WARNING SIGNS.

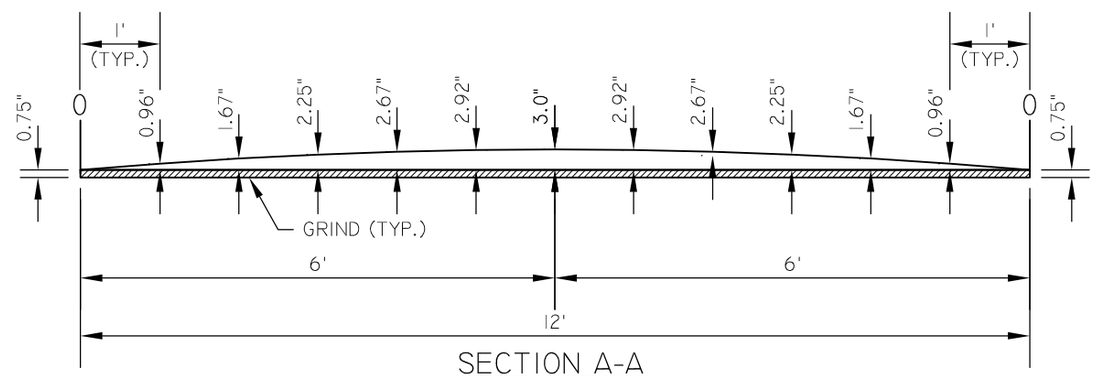

SECTION A-A

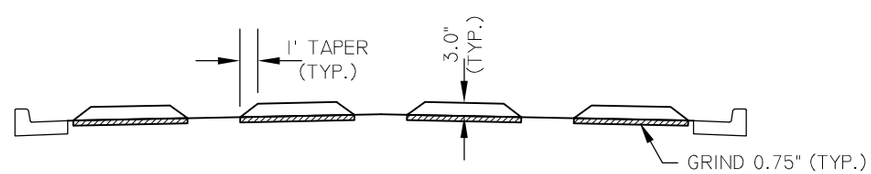

SECTION B-B

NOT TO SCALE

mesa·az

SPEED CUSHION SPECIFICATIONS - 40' STREET

DETAIL NO.
M-15.04

REV. 02/11/2015

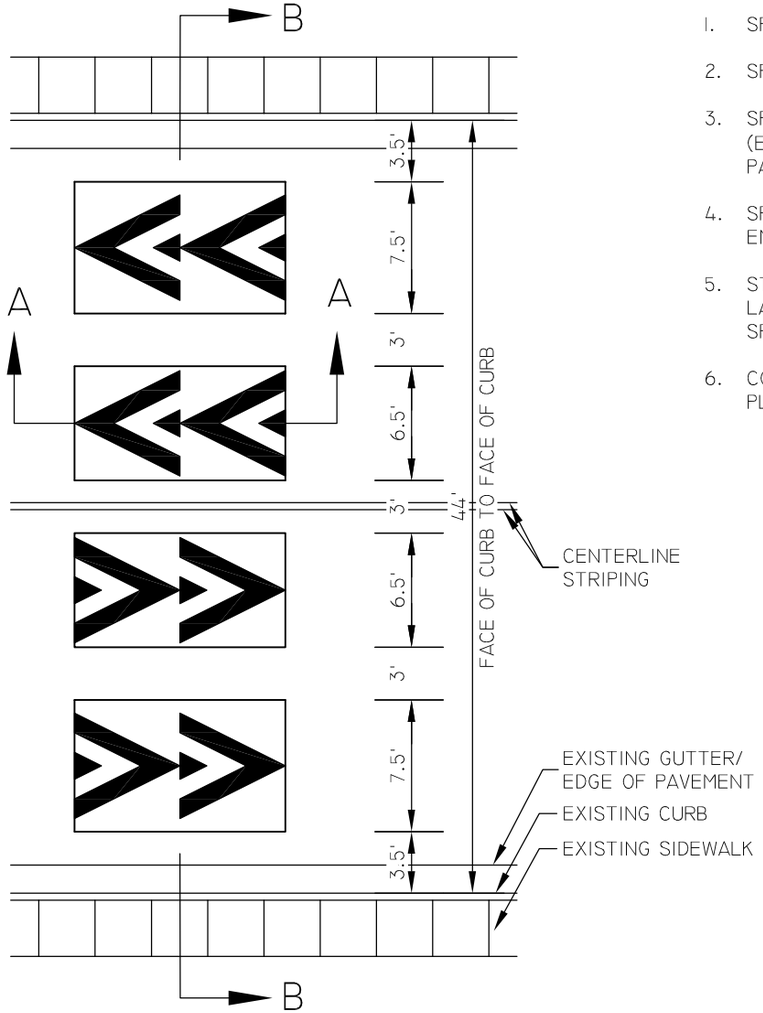

PLAN VIEW

NOTES

1. SPEED CUSHIONS SHALL NOT BE PLACED OVER MANHOLES, WATER VALVES, SURVEY MONUMENTS, ETC.
2. SPEED CUSHIONS SHALL NOT BE INSTALLED IN A LOCATION SUCH THAT DRAINAGE IS COMPROMISED.
3. SPEED CUSHIONS SHALL BE CONSTRUCTED WITH TYPE R-1/2" ASPHALT MIX PER THE CURRENT EAST VALLEY ASPHALT (EVA) CRITERIA AND BE APPROVED BY EVA COMMITTEE. A TACK COAT SHALL BE APPLIED PRIOR TO APPLICATION OF PAVEMENT MATERIAL.
4. SPEED CUSHIONS TO BE 3" IN HEIGHT TO PROVIDE MAXIMUM EFFECTIVENESS, WHILE NOT BEING OVERLY RESTRICTIVE TO EMERGENCY POLICE AND FIRE VEHICLES.
5. STRIPING TO BE INSTALLED PER COM DETAIL M-15.01. BECAUSE THE WIDTHS OF STREETS VARY, THE SPEED CUSHION LAYOUT MAY REQUIRE ADJUSTMENTS. CONSULT TRAFFIC STUDIES STAFF AT 480-644-2160 FOR STREET WIDTHS NOT SPECIFIED IN COM DETAILS M-15.03 THROUGH M-15.06.
6. CONTACT THE CITY OF MESA SIGN SHOP AT 480-644-3175 TWO WEEKS PRIOR TO INSTALLATION TO COORDINATE PLACEMENT OF ADVANCE WARNING SIGNS.

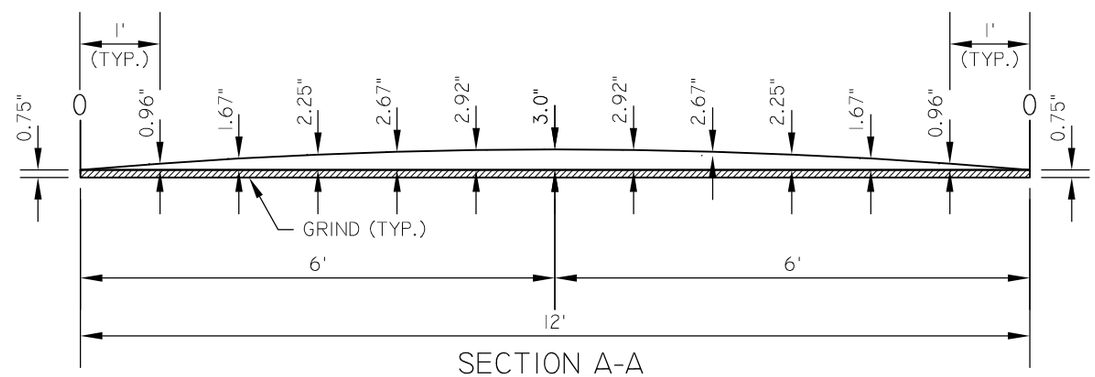

SECTION A-A

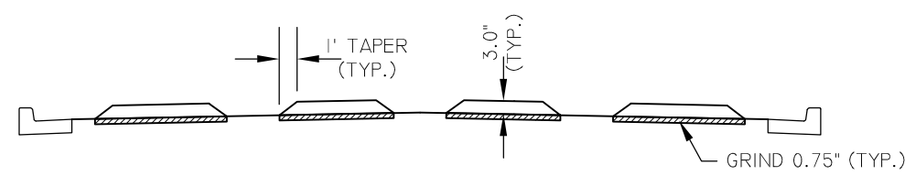

SECTION B-B

NOT TO SCALE

mesa·az

SPEED CUSHION SPECIFICATIONS - 44' STREET

DETAIL NO. M-15.05

REV. 02/11/2015

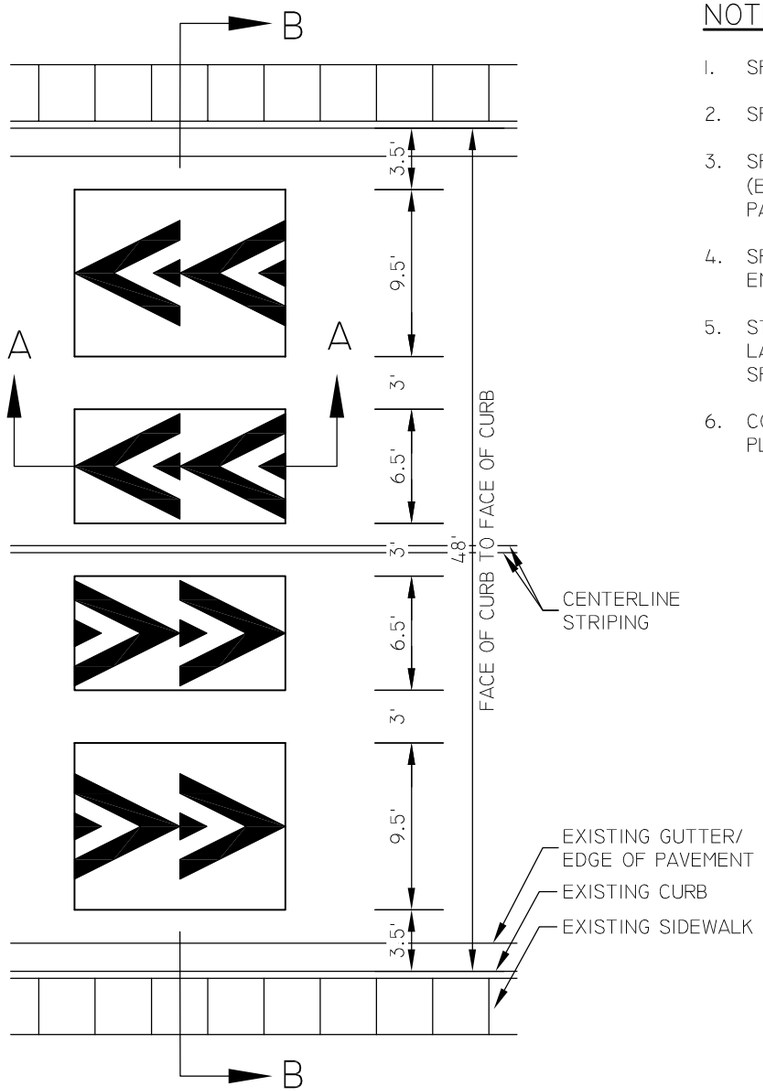

PLAN VIEW

NOTES

1. SPEED CUSHIONS SHALL NOT BE PLACED OVER MANHOLES, WATER VALVES, SURVEY MONUMENTS, ETC.
2. SPEED CUSHIONS SHALL NOT BE INSTALLED IN A LOCATION SUCH THAT DRAINAGE IS COMPROMISED.
3. SPEED CUSHIONS SHALL BE CONSTRUCTED WITH TYPE R-1/2" ASPHALT MIX PER THE CURRENT EAST VALLEY ASPHALT (EVA) CRITERIA AND BE APPROVED BY EVA COMMITTEE. A TACK COAT SHALL BE APPLIED PRIOR TO APPLICATION OF PAVEMENT MATERIAL.
4. SPEED CUSHIONS TO BE 3" IN HEIGHT TO PROVIDE MAXIMUM EFFECTIVENESS, WHILE NOT BEING OVERLY RESTRICTIVE TO EMERGENCY POLICE AND FIRE VEHICLES.
5. STRIPING TO BE INSTALLED PER COM DETAIL M-15.01. BECAUSE THE WIDTHS OF STREETS VARY, THE SPEED CUSHION LAYOUT MAY REQUIRE ADJUSTMENTS. CONSULT TRAFFIC STUDIES STAFF AT 480-644-2160 FOR STREET WIDTHS NOT SPECIFIED IN COM DETAILS M-15.03 THROUGH M-15.06.
6. CONTACT THE CITY OF MESA SIGN SHOP AT 480-644-3175 TWO WEEKS PRIOR TO INSTALLATION TO COORDINATE PLACEMENT OF ADVANCE WARNING SIGNS.

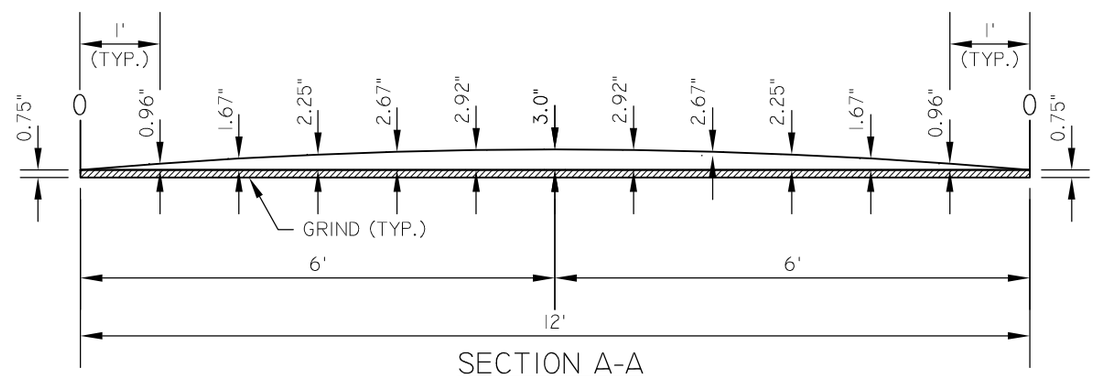

SECTION A-A

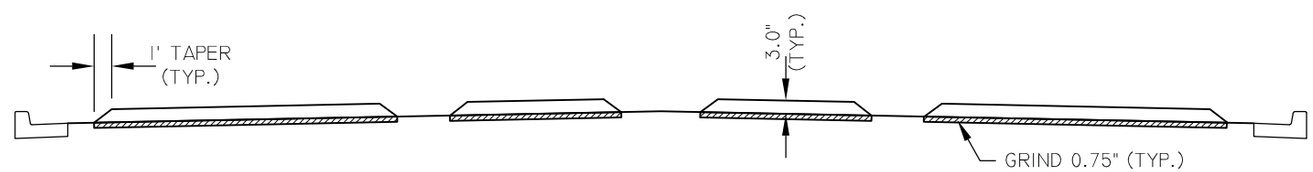

SECTION B-B

NOT TO SCALE

mesa·az

SPEED CUSHION SPECIFICATIONS - 48' STREET

DETAIL NO.
M-15.06

REV. 02/11/2015

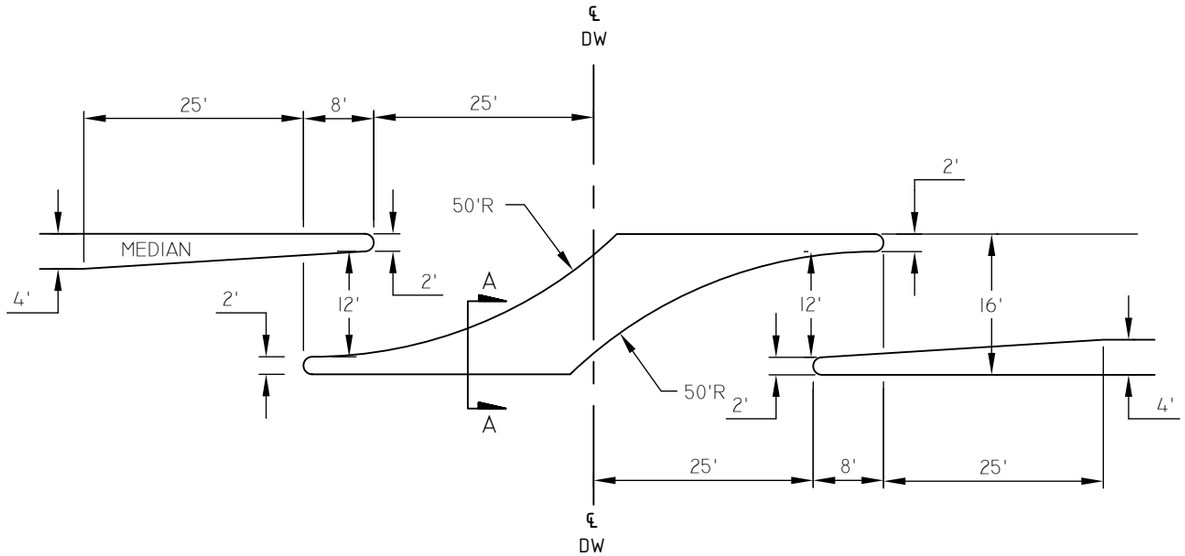

PARTIAL MEDIAN ACCESS ISLAND

NOTES

1. ENGINEER SHALL PROVIDE PROPER DRAINAGE OF THE PARTIAL MEDIAN ACCESS OPENING AS APPROVED BY THE CITY.
2. STREET LIGHTS MAY NOT BE PLACED ON THE PARTIAL MEDIAN ISLAND.
3. CL DW IS CENTERLINE OF DRIVEWAY. IN CASE OF DIVIDED DRIVEWAYS IT IS THE CENTERLINE OF THE ENTRANCE SIDE.
4. ALL DIMENSIONS ARE TO FACE OF CURB. DIMENSIONS SHOWN ARE FOR TYPICAL 16' MEDIAN.
5. USE MAG DETAIL 223 MEDIAN NOSE TRANSITION DETAIL.

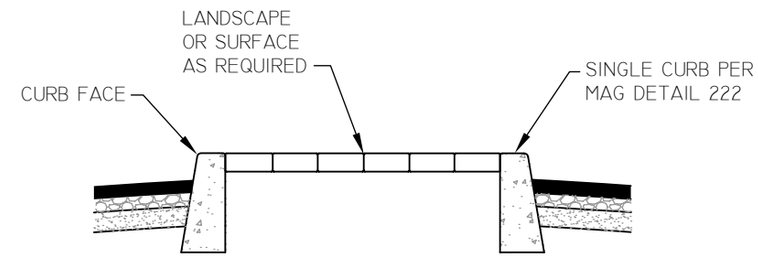

SECTION A-A

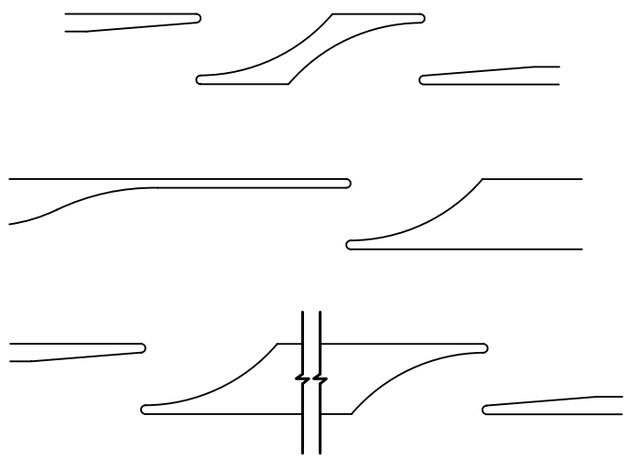

TYPICAL APPLICATIONS

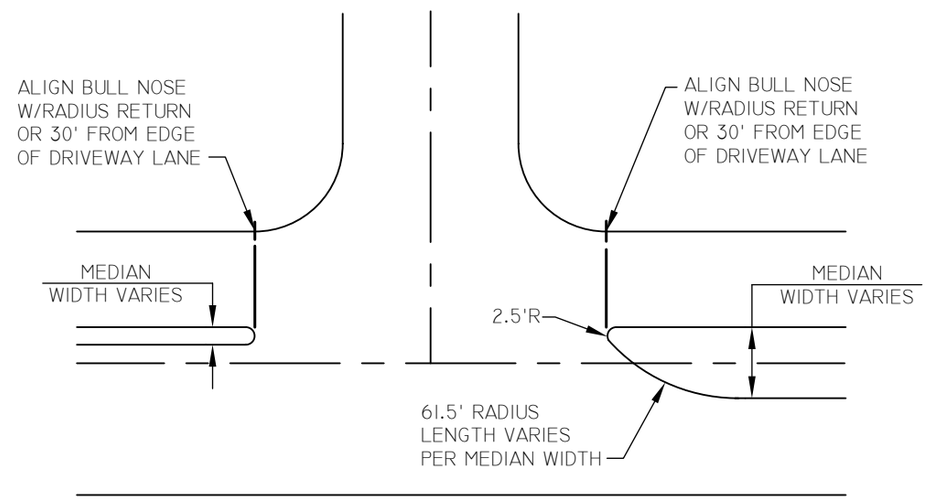

MEDIAN NOSE ALIGNMENT AT TEE INTERSECTION

NOT TO SCALE

mesa·az

RAISED MEDIAN OPENINGS

DETAIL NO. M-16

REV. 1/31/2014

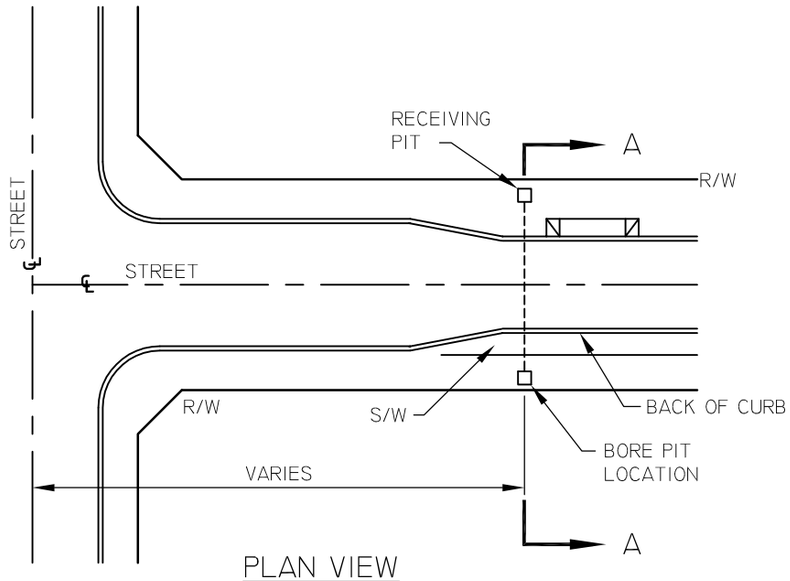

PLAN VIEW

NOT TO SCALE

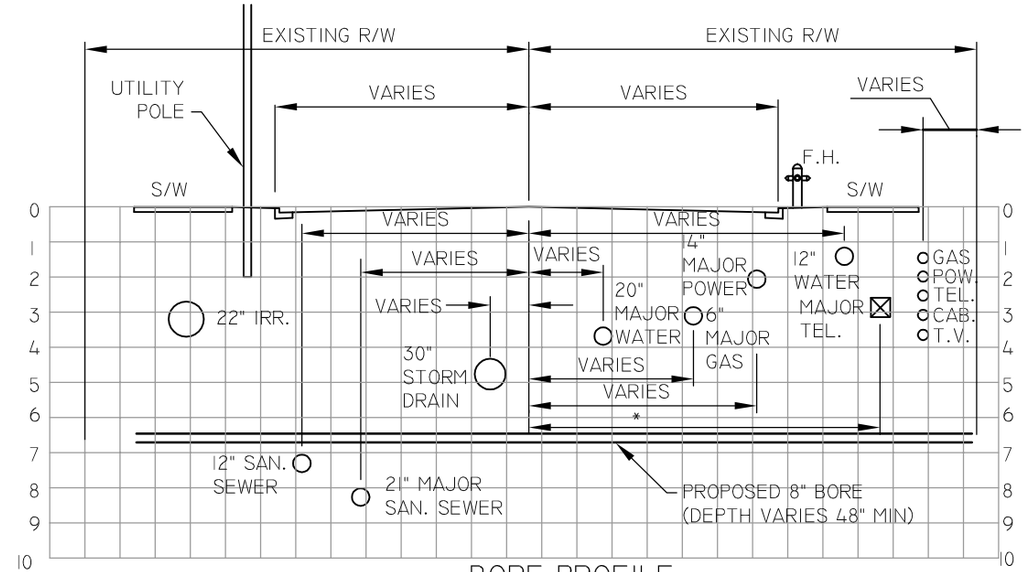

BORE PROFILE

TYPICAL SECTION A-A

NOT TO SCALE

NOTES

1. UTILITY BORES SHALL BE PERFORMED IN ACCORDANCE WITH THE POLICY STATEMENT FOR UTILITY INSTALLATION USING BORING METHODS WITHIN PUBLIC RIGHT-OF-WAY. PRIOR TO ANY WORK, THE UTILITY COMPANY SHALL SUBMIT PLANS FOR REVIEW AND APPROVAL BY THE CITY.

2. GUIDED BORES ARE REQUIRED WHEN THE BORE EXCEEDS 45 FEET IN LENGTH, UNLESS OTHERWISE APPROVED BY THE ENGINEER AND ENGINEERING INSPECTOR.

3. A PVC CONDUIT, SCHEDULE 40 OR BETTER, SHALL BE INSERTED IN THE BORE TO CARRY THE UTILITY COMPANY'S CABLES OR PRODUCT.

4. A 1-FOOT MINIMUM CLEARANCE SHALL BE MAINTAINED BETWEEN THE BORE AND EXISTING UTILITIES UNLESS OTHERWISE APPROVED BY ENGINEERING INSPECTOR.

5. WHEN THE BORE PASSES WITHIN 2 FEET OF ANY EXISTING UTILITY, A POTHOLE AT THE TIME OF THE BORE WILL BE REQUIRED TO MONITOR THE BORE.

6. THE CITY INSPECTOR SHALL BE NOTIFIED IF OBSTRUCTIONS ARE ENCOUNTERED.

7. POTHOLES ARE REQUIRED TO VERIFY ALL UTILITY LOCATIONS PRIOR TO THE BORE. EVERY REASONABLE EFFORT SHALL BE EMPLOYED TO EXPOSE AND VERIFY THE EXACT LOCATION OF THE UTILITY/FACILITY. WHEN THE UTILITY CANNOT BE FOUND AS MARKED (BLUE STAKED), THE POTHOLING CONTRACTOR/EXCAVATOR SHALL NOTIFY THE FACILITY OWNER (AS NOTED ON THE BLUE STAKE TICKET) FOR ADDITIONAL INFORMATION. IF NO FURTHER INFORMATION IS AVAILABLE, THE EXCAVATOR SHALL EXTEND THE SEARCH FOR A MINIMUM OF 2 FEET BELOW, AND 2 FEET TO EITHER SIDE OF THE PROPOSED BORE LOCATION/ELEVATION.

8. WHEN VACUUM POTHOLES ARE REQUIRED, PAVEMENT CUT SHALL CONFORM TO COM DETAIL M-18.03.

9. THE UTILITY COMPANY OR THEIR CONTRACTOR SHALL PROVIDE COPIES OF ALL BORE PROFILES TO THE ENGINEERING INSPECTOR PRIOR TO THE BORE.

10. BACKFILL REQUIREMENTS FOR EXCAVATIONS (PITS) OUTSIDE THE ROADWAY PRISM SHALL BE PER MAG SECTION 600.

11. REPAIR OR REPLACE IN-KIND ANY UTILITY DAMAGED DURING CONSTRUCTION PER MAG SECTION 107.11 AND LANDSCAPE/SPRINKLER DAMAGE PER MAG SECTION 107.9.

12. THE UTILITY COMPANY/CONTRACTOR SHALL OBTAIN WRITTEN PERMISSION FROM THE OWNER TO TRIM OR REMOVE ANY LANDSCAPING. WHEN REQUESTED, A COPY OF THE PERMISSION SHALL BE PROVIDED TO THE ENGINEERING INSPECTOR.

13. CONTACT BLUE STAKE AT 602-263-1100 BEFORE ANY POTHOLING, EXCAVATING, OR BORING.

14. WHEN A NATURAL GAS LINE IS EXPOSED, CONTACT THE AFFECTED GAS UTILITY FOR THE INSPECTION OF GAS LINE PRIOR TO BACKFILLING. WHEN BACKFILLING, THE CITY OF MESA REQUIRES SHADING MATERIAL 6 INCHES (MINIMUM) AROUND THE BOTTOM, TOP, AND SIDES OF THE PIPE. SHADING MATERIAL ADJACENT TO THE PIPE SHALL BE SELECT SANDY TYPE SOIL, FREE OF ROCKS OR DEBRIS AND WILL PASS THROUGH A 3/8" SCREEN. CITY OF MESA (GAS): 480-644-2754 OR 480-644-2262. SOUTHWEST GAS: 602-861-1999 OR 602-271-4277.

mesa·az

ENGINEERED UTILITY BORES
PERPENDICULAR TO CENTER LINE OF STREET

DETAIL NO.
M-18

REV. 03/24/2015

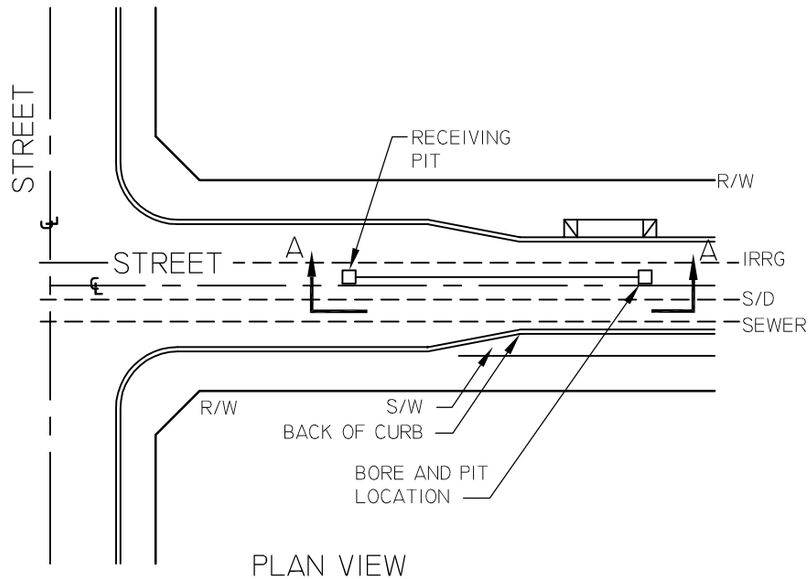

PLAN VIEW

NOT TO SCALE

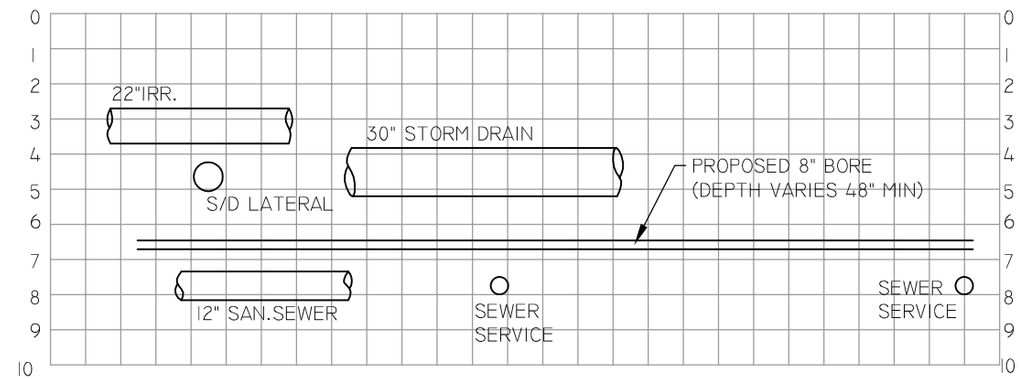

BORE PROFILE

TYPICAL SECTION A-A

NOT TO SCALE

NOTES

1. UTILITY BORES SHALL BE PERFORMED IN ACCORDANCE WITH THE POLICY STATEMENT FOR UTILITY INSTALLATION USING BORING METHODS WITHIN PUBLIC RIGHT-OF-WAY. PRIOR TO ANY WORK, THE UTILITY COMPANY SHALL SUBMIT PLANS FOR REVIEW AND APPROVAL BY THE CITY.
2. GUIDED BORES ARE REQUIRED WHEN THE BORE EXCEEDS 45 FEET IN LENGTH, UNLESS OTHERWISE APPROVED BY THE ENGINEER AND ENGINEERING INSPECTOR.
3. A PVC CONDUIT, SCHEDULE 40 OR BETTER, SHALL BE INSERTED IN THE BORE TO CARRY THE UTILITY COMPANY'S CABLES OR PRODUCT.
4. A 1-FOOT MINIMUM CLEARANCE SHALL BE MAINTAINED BETWEEN THE BORE AND EXISTING UTILITIES UNLESS OTHERWISE APPROVED BY ENGINEERING INSPECTOR.
5. WHEN THE BORE PASSES WITHIN 2 FEET OF ANY EXISTING UTILITY, A POTHOLE AT THE TIME OF THE BORE WILL BE REQUIRED TO MONITOR THE BORE.
6. THE CITY INSPECTOR SHALL BE NOTIFIED IF OBSTRUCTIONS ARE ENCOUNTERED.
7. POTHOLES ARE REQUIRED TO VERIFY ALL UTILITY LOCATIONS PRIOR TO THE BORE. EVERY REASONABLE EFFORT SHALL BE EMPLOYED TO EXPOSE AND VERIFY THE EXACT LOCATION OF THE UTILITY/FACILITY. WHEN THE UTILITY CANNOT BE FOUND AS MARKED (BLUE STAKED), THE POTHOLING CONTRACTOR/EXCAVATOR SHALL NOTIFY THE FACILITY OWNER (AS NOTED ON THE BLUE STAKE TICKET) FOR ADDITIONAL INFORMATION. IF NO FURTHER INFORMATION IS AVAILABLE, THE EXCAVATOR SHALL EXTEND THE SEARCH FOR A MINIMUM OF 2 FEET BELOW, AND 2 FEET TO EITHER SIDE OF THE PROPOSED BORE LOCATION/ELEVATION.
8. WHEN VACUUM POTHOLES ARE REQUIRED, PAVEMENT CUT SHALL CONFORM TO COM DETAIL M-18.03.
9. THE UTILITY COMPANY OR THEIR CONTRACTOR SHALL PROVIDE COPIES OF ALL BORE PROFILES TO THE ENGINEERING INSPECTOR PRIOR TO THE BORE.
10. BACKFILL REQUIREMENTS FOR EXCAVATIONS (PITS) OUTSIDE THE ROADWAY PRISM SHALL BE PER MAG SECTION 600.
11. REPAIR OR REPLACE IN-KIND ANY UTILITY DAMAGED DURING CONSTRUCTION PER MAG SECTION 107.11 AND LANDSCAPE/SPRINKLER DAMAGE PER MAG SECTION 107.9.
12. THE UTILITY COMPANY/CONTRACTOR SHALL OBTAIN WRITTEN PERMISSION FROM THE OWNER TO TRIM OR REMOVE ANY LANDSCAPING. WHEN REQUESTED, A COPY OF THE PERMISSION SHALL BE PROVIDED TO THE ENGINEERING INSPECTOR.
13. CONTACT BLUE STAKE AT 602-263-1100 BEFORE ANY POTHOLING, EXCAVATING, OR BORING.
14. WHEN A NATURAL GAS LINE IS EXPOSED, CONTACT THE AFFECTED GAS UTILITY FOR THE INSPECTION OF GAS LINE PRIOR TO BACKFILLING. WHEN BACKFILLING, THE CITY OF MESA REQUIRES SHADING MATERIAL 6 INCHES (MINIMUM) AROUND THE BOTTOM, TOP, AND SIDES OF THE PIPE. SHADING MATERIAL ADJACENT TO THE PIPE SHALL BE SELECT SANDY TYPE SOIL, FREE OF ROCKS OR DEBRIS AND WILL PASS THROUGH A 3/8" SCREEN. CITY OF MESA (GAS): 480-644-2754 OR 480-644-2262. SOUTHWEST GAS: 602-861-1999 OR 602-271-4277.

mesa·az

ENGINEERED UTILITY BORES
PARALLEL TO CENTER LINE OF STREET

DETAIL NO.
M-18.01

REV. 03/24/2015

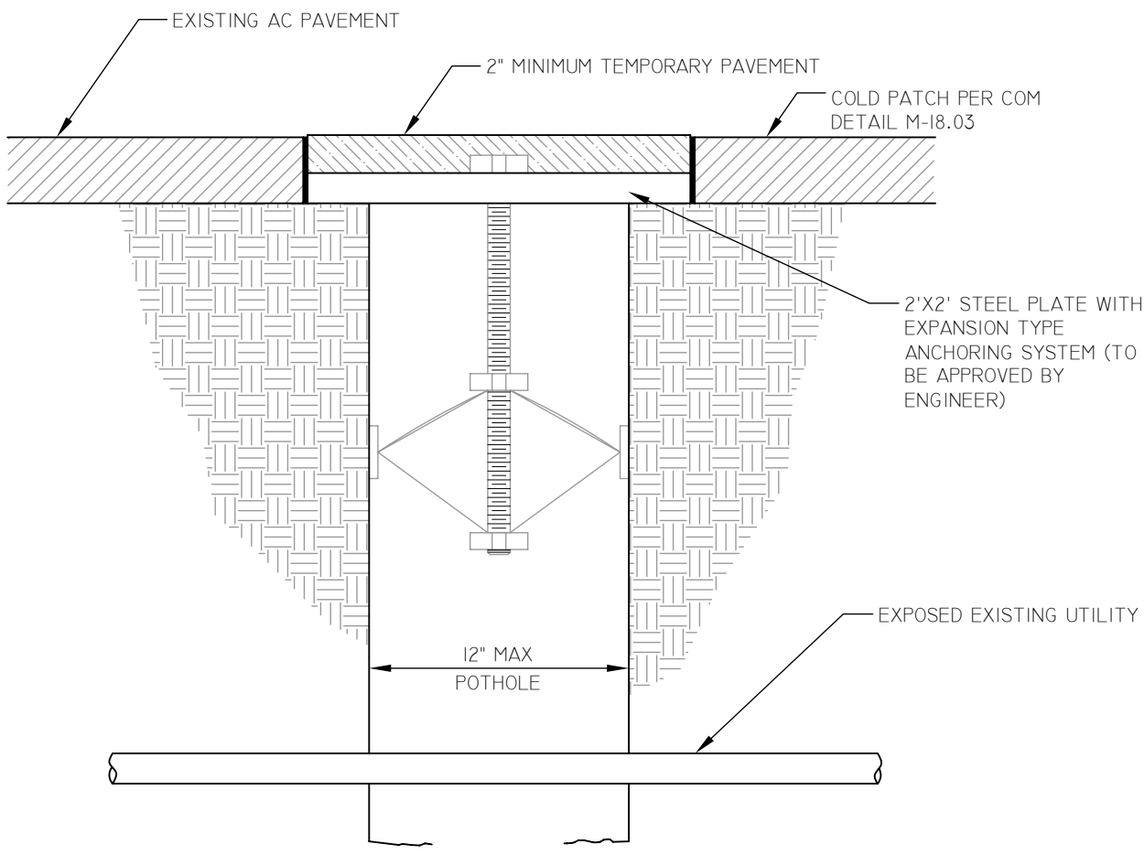

POTHOLE COVER ANCHOR SYSTEM

NOTES

1. TEMPORARY POTHOLE PROTECTION IS ONLY TO BE USED WITH PERMISSION OF ENGINEER.
2. POTHOLE EXCAVATION SHALL BE A MAXIMUM OF 12-INCHES IN DIAMETER.
3. POTHOLE COVER ANCHORING SYSTEM SHALL BE APPROVED BY ENGINEER PRIOR TO USE.
4. CONTRACTOR SHALL INSPECT COVERED POTHOLES DAILY AND SHALL IMMEDIATELY CORRECT ANY THAT SHOW MOVEMENT OR DISPLACEMENT. A LOG OF THE DAILY INSPECTIONS SHALL BE SUPPLIED TO THE INSPECTOR, SIGNED DAILY BY THE CONTRACTOR.
5. CONTACT BLUE STAKE AT (602) 263-1100 BEFORE ANY POTHOLING, EXCAVATING, OR BORING.

NOT TO SCALE

mesa·az

TEMPORARY POTHOLE PROTECTION IN ARTERIAL STREETS

DETAIL NO.
M-18.02

REV. 01/31/14

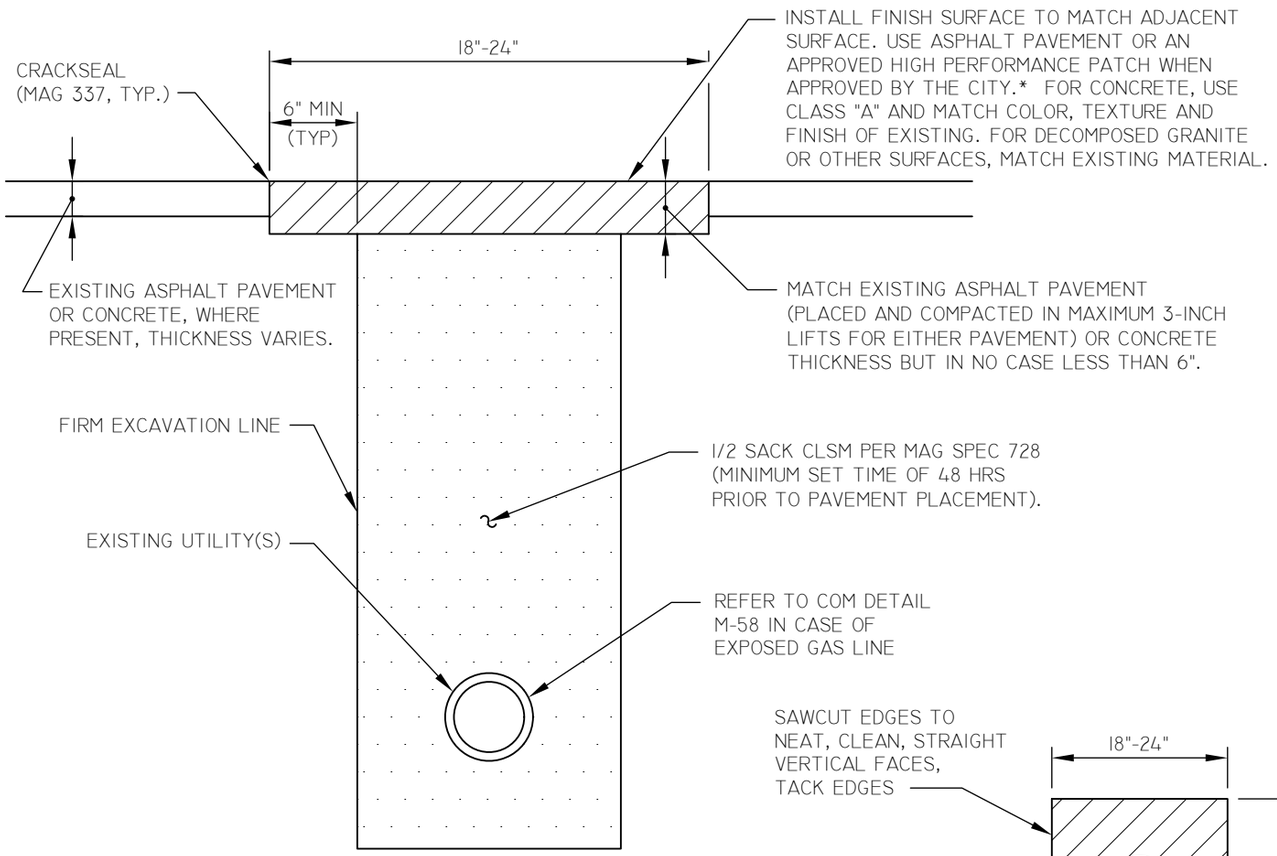

SECTION A-A

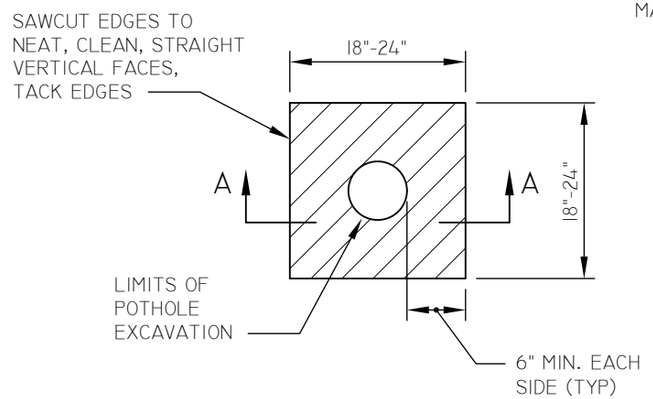

POTHOLE PLAN VIEW

NOTES

1. THE MAXIMUM PAVEMENT CUT FOR VACUUM POTHOLE SHALL NOT EXCEED 24" X 24".
2. CLUSTERED POTHOLES, TWO FEET OF SEPARATION OR LESS, MUST BE COMBINED TO FORM ONE UNIFORM PATCH AND MEET COM DETAIL M-19.04.
3. FOR POTHOLE EXCAVATION REQUIRED WITHIN CONCRETE FACILITIES, SUCH AS PEDESTRIAN RAMPS OR DRIVEWAYS, THE CONCRETE MUST BE SAWCUT AND REMOVED TO THE NEAREST JOINT OR ENTIRE SECTION. CONCRETE MUST BE RESTORED PER MAG AND CITY OF MESA DETAILS. SIDEWALK PANELS MUST BE ENTIRELY REMOVED AND REPLACED IN-KIND, IF POTHOLED OR DAMAGED.
4. TEMPORARY PAVEMENT SHALL BE AUTHORIZED FOR TEN BUSINESS DAYS OR AT THE DISCRETION OF THE CITY INSPECTOR.
5. IN THE EVENT THAT PERMANENT OR TEMPORARY POTHOLES SETTLE 1/4" DIFFERENCE OR GREATER, THE CONTRACTOR SHALL PERMANENTLY REPAIR THE POTHOLES PER CITY OF MESA AND MAG STANDARDS WITHIN TWO DAYS.
6. THE CONTRACTOR WILL BE REQUIRED TO REMOVE AND RESTORE EXISTING LANDSCAPE AND LANDSCAPE IRRIGATION THAT IS DISTURBED BY CONSTRUCTION. SAID LANDSCAPE AND LANDSCAPE IRRIGATION SHALL BE REPLACED IN-KIND AND REPAIRED TO THE SATISFACTION OF THE PRIVATE PROPERTY OWNER (IF APPLICABLE) AND THE CITY INSPECTOR. EXISTING CONDITIONS DEFINED HEREIN SHALL INCLUDE, BUT NOT BE LIMITED TO PLANTS, PAVESTONES, ROCK, GRAVEL, DRIVEWAYS, CONCRETE BORDERS, RETENTION BERMS, SPRINKLER SYSTEMS, AND OTHER LANDSCAPE MATERIALS.

* COLD MIX ASPHALT - CRAFCO H.P. (HIGH PERFORMANCE) COLD PATCH OR APPROVED EQUIVALENT

NOT TO SCALE

mesa·az

POTHOLE REPAIR DETAIL

DETAIL NO.
M-18.03

REV. 02/18/2015

NOTES

1. ALL STREETS TO BE CONSTRUCTED WITH A STRAIGHT CROWN AT A 2% CROSS SLOPE.
2. WHERE 10" A.B.C. IS REQUIRED, IT IS TO BE INSTALLED IN (2) TWO EQUAL LAYERS.
3. A.B.C. FILL TO CONFORM TO SECTION 702 (AGGREGATE BASE).
4. ASPHALT CONCRETE SHALL CONFORM TO THE CURRENT EAST VALLEY ASPHALT COMMITTEE HOT ASPHALT MIX CRITERIA, 2012 EDITION, AND BE APPROVED BY THE EAST VALLEY ASPHALT COMMITTEE (EVAC).
5. ARTERIAL STREET SURFACE COURSE ASPHALT SHALL BE POLYMER MODIFIED TERMINAL BLEND RUBBER (PMTR+) PER EVAC CRITERIA.
6. SURFACE TREATMENT OF THE FINAL SURFACE COURSE FOR "R" ASPHALT MIXES, INCLUDING PARKING LOT MIXES, SHALL BE APPLIED AS FOLLOWS:
   APPLY A POLYMER MODIFIED MASTERSEAL OR EQUIVALENT MEETING COM REQUIREMENTS (AS DETERMINED BY THE CITY REPRESENTATIVE) AT A MINIMUM APPLICATION RATE OF.12 GAL PER SQ YD FOR EACH OF TWO APPLICATIONS, NOT TO EXCEED .30 GAL PER SQ YD TOTAL (OR PER MANUFACTURER'S RECOMMENDED GUIDELINES). APPLY WITHIN 3 MONTHS OF ASPHALT PLACEMENT OR AS DIRECTED BY THE CITY REPRESENTATIVE. SEE MESA AMENDMENTS FOR SPECIFICATION AND LIST OF ACCEPTABLE PRODUCTS. EACH PRODUCT WILL REQUIRE A SUBMITTAL FOR APPROVAL PRIOR TO PLACEMENT.
7. SURFACE TREATMENT OF THE FINAL SURFACE COURSE FOR "A" ASPHALT MIXES SHALL BE APPLIED AS FOLLOWS:
   APPLY CQS-TR FOG SEAL WITH A DILUTION OF 1:1 WITH WATER AND APPLICATION RATE OF .08 GAL PER SQ YD. APPLY NO SOONER THAN 6 MONTHS AFTER ASPHALT PLACEMENT OR AS DIRECTED BY THE CITY REPRESENTATIVE WITHIN 1-YEAR OF ASPHALT PLACEMENT, NOT TO EXCEED ONE (1) TREATMENT. SEE MESA AMENDMENTS FOR SPECIFICATION. FOG SEAL WILL REQUIRE A SUBMITTAL FOR APPROVAL PRIOR TO PLACEMENT.
8. UTILITY ADJUSTMENTS SHALL BE COMPLETED PRIOR TO APPLICATION OF SURFACE TREATMENT.
9. FINISH ELEVATION OF THE ADJACENT PARKWAY SHALL BE 1" BELOW THE TOP OF SIDEWALK FOR A MINIMUM DISTANCE OF 1-FOOT. BEYOND THE 1-FOOT, THE SLOPE SHALL NOT EXCEED 6:1.
10. MAX. 6:1 SLOPE ALLOWED EXCEPT WHERE AREA IMMEDIATELY ADJACENT TO R.O.W. OR SIDEWALK HAS 3' MIN. AREA AT SLOPE OF 6:1 OR LESS. THEN SLOPE BEYOND SAID 3' AREA CAN BE INCREASED TO A MAX OF 4:1. SIDEWALK WIDTHS SHOWN ON THIS DETAIL SHALL TAKE PRECEDENT OVER MAG DETAIL 230.

	ROADWAY (WIDTH)		SIDEWALK (WIDTH)	SURFACE COURSE (DEPTH) (TYPE)	BASE COURSE (DEPTH) (TYPE)	A.B.C. FILL (DEPTH)	RIGHT OF WAY (WIDTH)
	FACE TO FACE	CL TO FACE					
	(A)	(B)	(C)	(D)	(E)	(F)	(G)
LOCAL STREET RESIDENTIAL LAND USE	34'	17'	4'	3.0" R-1/2"	N/A	6"	50'+8 PUFE
LOCAL STREET RESIDENTIAL LAND USE, OPTIONAL	34'	17'	5'**	3.0" R-1/2"	N/A	6"	50'+10' PUFE
LOCAL STREET INDUSTRIAL	40'	20'	4'	2.0." A-1/2"	3" A-3/4"	8"	60'+20' PUFE
LOCAL STREET COMMERCIAL	46'	23'	4'	2.0" A-1/2"	3" A-3/4"	8"	80'+8 PUFE
COLLECTOR STREET *	34'/40'/46'	17'/20'/23'	6'	3.5" R-3/4"	N/A	6"	80'/80'/80'+8 PUFE
MAJOR COLLECTOR STREET *	68'	34'	6'	2" A-1/2"	3 1/2" A-3/4"	10"	110'+8 PUFE
ARTERIAL STREET *	68'/72'/88'/94' ***	34'/36'/44'/47' ***	6'	2" A-1/2" PMTR±	3 1/2" A-3/4"	10"	110' TO 130'+8 PUFE ***

* DETACHED, LINEAR SIDEWALKS ARE REQUIRED. SEE DETAIL M-43. ** USE 5' DETACHMENT *** MAY BE WIDER AT INTERSECTIONS AND TURN LANES - SEE M-46.01 THROUGH M-46.05.

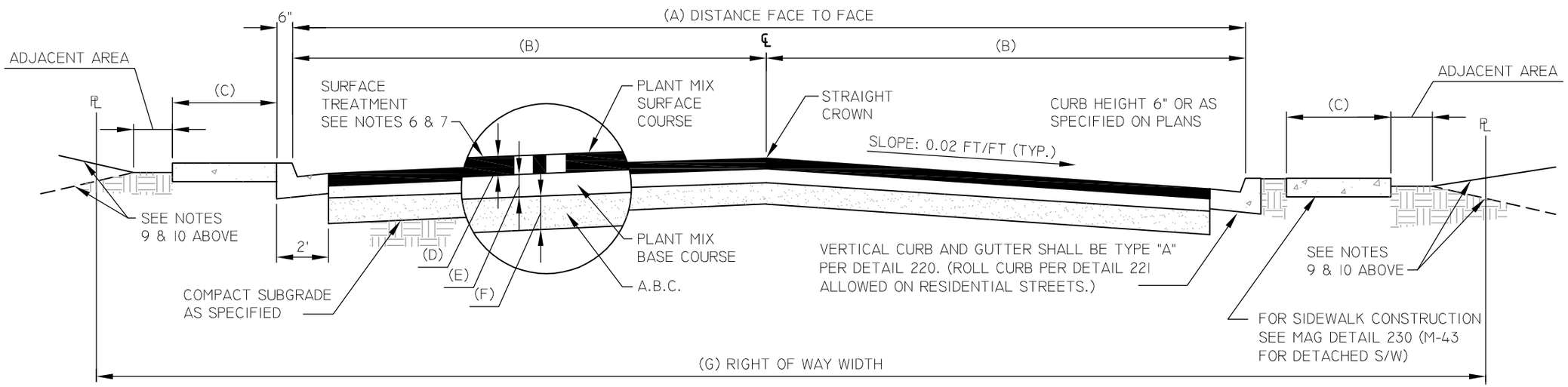

mesa·az

TYPICAL STREET SECTION

DETAIL NO. M-19.01

REV. 02/18/2015

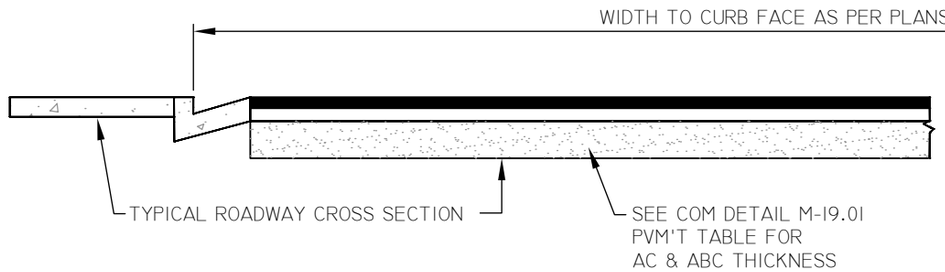

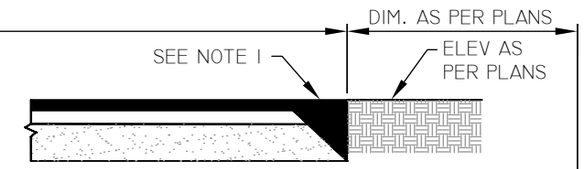

TYPE F

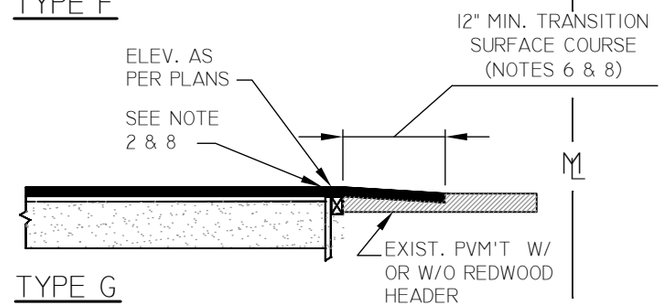

TYPE G

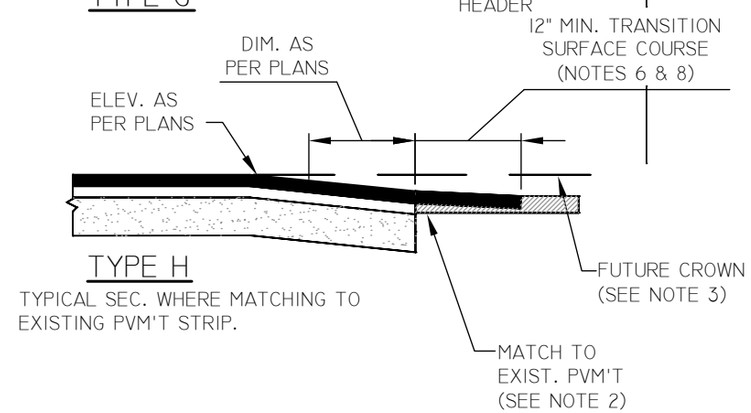

TYPE H

TYPICAL SEC. WHERE MATCHING TO EXISTING PVM'T STRIP.

NOTES

1. REDWOOD HEADER (MAG DETAIL 201 TYPE C) OR THICKENED EDGE (MAG 201 TYPE B) AS REQUIRED ON CONSTRUCTION PLANS.
2. REMOVE EXISTING REDWOOD HEADER (IN SOME CASES REDWOOD HEADER MAY NOT EXIST, SAWCUT EXISTING PAVEMENT AS REQUIRED BY FIELD INSPECTOR). MATCH NEW PAVEMENT TO EXISTING AND BUTT JOINT.
3. ALL STREETS TO BE CONSTRUCTED WITH STRAIGHT CROWN OF 0.02 FT/FT.
4. WHERE 10" ABC IS REQUIRED, IT IS TO BE INSTALLED IN TWO (2) EQUAL LAYERS.
5. NEW PAVEMENT MAY REQUIRE ABC FILL OVER EXISTING PAVEMENT TO BRING NEW ROADWAY TO GRADE.
6. ONE-FOOT TRANSITION WILL APPLY TO ALL LOCAL AND COLLECTOR STREETS (R-1/2 " AC MIX), MAJOR COLLECTOR, ARTERIAL, AND INDUSTRIAL/COMMERCIAL STREETS (A-1/2" AC MIX). ALL TRANSITIONS SHALL BE BUTT JOINT.
7. PLACE NEW SURFACE & BASE PAVEMENT OVER EXISTING PAVEMENT. (SEE COM DETAIL M-19.01 FOR MIN. THICKNESS.)
8. WHEN THE ELEVATION OF THE NEW BASE ASPHALT DOES NOT MATCH THE EXISTING, ASPHALT AND/OR AGGREGATE BASE SHALL BE SAWCUT, REMOVED, AND REPLACED AS DIRECTED BY THE INSPECTOR TO CREATE A SMOOTH TRANSITION.

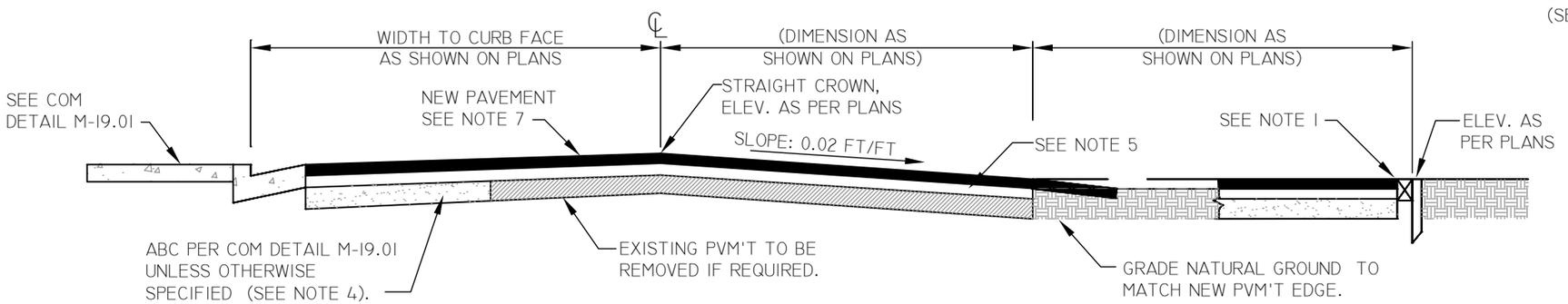

TYPE J

TYPICAL SEC. WHERE NEW ROADWAY TO BE CONSTRUCTED OVER EXIST. PVM'T.

mesa·az

TYPICAL PARTIAL STREET CROSS SECTION

DETAIL NO.
M-19.02

REV. 02/12/2015

NOTES

1. ALL STREETS TO BE CONSTRUCTED WITH A STRAIGHT CROWN OF 0.02 FT/FT.
2. A.B.C. BASE TO CONFORM TO MAG SUBSECTION 702.2 (AGGREGATE BASE).
3. ASPHALT CONCRETE SHALL CONFORM TO THE EAST VALLEY ASPHALT CRITERIA, 2007 EDITION AND BE APPROVED BY THE EVA COMMITTEE.
4. ALL INTERSECTION RETURNS SHALL HAVE A 20-FOOT BACK OF CURB RADIUS, 4-INCH VERTICAL CURB BETWEEN RADIUS POINTS, AND A 5-FOOT TRANSITION (SIMILAR TO MAG DETAIL 221) TO RIBBON CURB.
5. SURFACE TREATMENT OF THE FINAL SURFACE COURSE FOR "R" ASPHALT MIXES SHALL BE APPLIED AS FOLLOWS:
   APPLY A POLYMER MODIFIED MASTERSEAL OR EQUIVALENT MEETING COM REQUIREMENTS AT A RATE SPECIFIED BY THE PRODUCT'S MANUFACTURER BUT NO LESS THAN (2) TWO APPLICATIONS AT A RATE OF .12 GAL PER SQ YD PER INDIVIDUAL APPLICATION OR AS DIRECTED BY THE CITY REPRESENTATIVE. SEE MESA AMENDMENTS FOR SPECIFICATION AND LIST OF ACCEPTABLE PRODUCTS. EACH PRODUCT WILL REQUIRE A SUBMITTAL FOR APPROVAL PRIOR TO APPLICATION.
6. UTILITY ADJUSTMENTS SHALL BE COMPLETED PRIOR TO APPLICATION OF SURFACE TREATMENT.

PAVEMENT TABLE

ROADWAY (WIDTH)		RIBBON (WIDTH)	A.C.SURFACE COURSE (DEPTH) (TYPE)	A.C.BASE COURSE (DEPTH) (TYPE)	A.B.C.BASE (DEPTH)	RIGHT OF WAY (WIDTH)
LIP TO LIP (A)	CL TO LIP (B)	(C)	(D)	(E)	(F)	(G)
31'	15.5'	2'	3" R-1/2" SEE NOTE 5	N/A	6"	50'

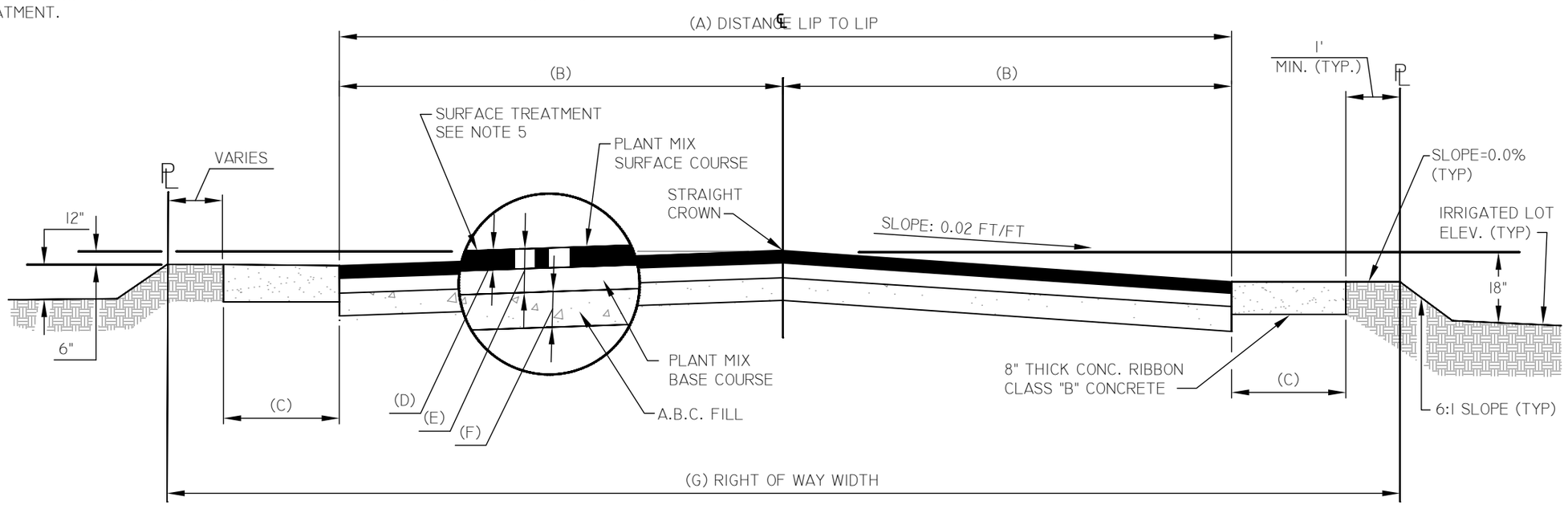

NOT TO SCALE

SUBURBAN RANCH STREET SECTION

DETAIL NO. M-19.03

REV. 02/12/2015

LONGITUDINAL TRENCHES
(PARALLEL TO CL OF STREET)

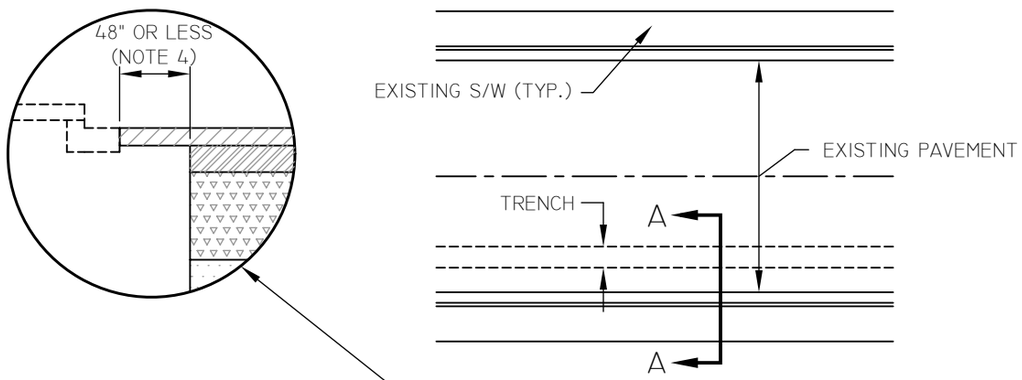

TRANSVERSE TRENCHES
(NON PARALLEL TO CL OF STREET, SEE NOTE 9)

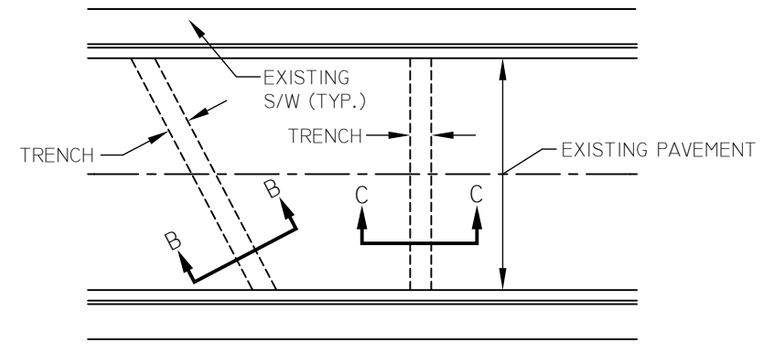

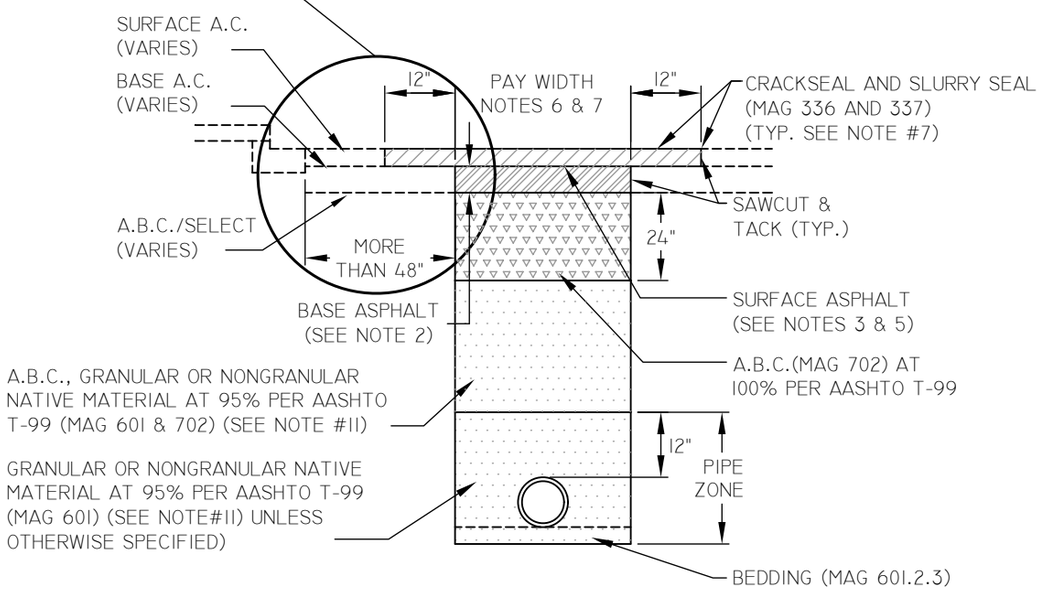

LONGITUDINAL TYP. BACKFILL SEC. A-A
(TYPE "A")

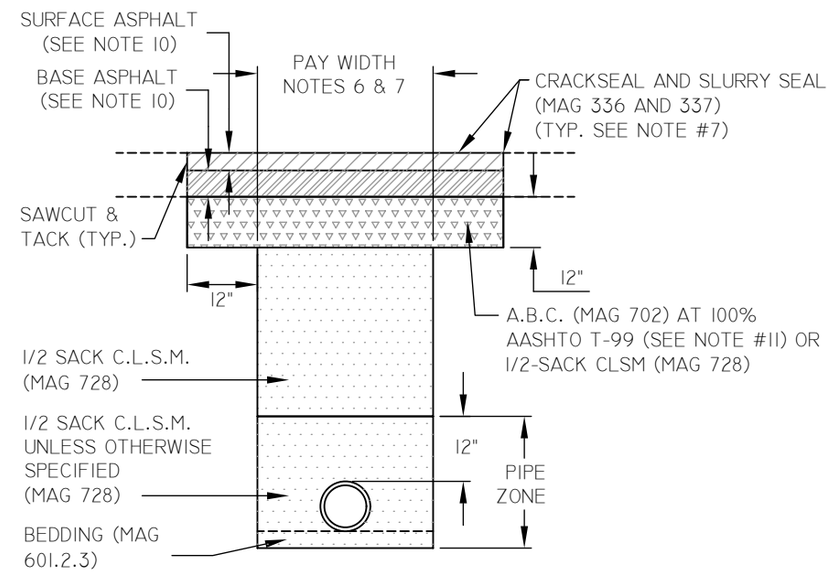

TRANSVERSE TYP. BACKFILL SEC. B-B & C-C
(TYPE "B")

SEE M-19.04.2
FOR NOTES

NOT TO SCALE

STANDARD TRENCH BACKFILL DETAIL
ARTERIAL, COLLECTOR & LOCAL

DETAIL NO.
M-19.04.1

REV. 02/12/2015

NOTES

1. SEE LATEST POLICY STATEMENT FOR STREET TRENCH BACKFILLING AND REPLACEMENT.

2. BASE ASPHALT SHALL BE INSTALLED TO SURFACE OF EXISTING PAVEMENT. THE THICKNESS OF THE ASPHALT SHALL BE EQUAL TO THE ADJACENT EXISTING ASPHALT HOWEVER, NOT LESS THAN THE SUM OF BOTH BASE & SURFACE COURSE ASPHALTS AS NOTED IN COM DETAIL M-19.01. THE TYPE OF ASPHALT CONCRETE MIX SHALL BE PER COM DETAILS M-19.01 OR M-19.03 EXCEPT WHEN AN A-3/4" ASPHALT MIX IS REQUIRED FOR A SURFACE COURSE, A 1/2" ASPHALT MIX WILL BE INSTALLED. IF THE DEPTH OF THE ASPHALT IS MORE THAN 4-INCHES, PLACEMENT SHALL BE IN TWO LIFTS.

3. AFTER THE BASE ASPHALT PATCH HAS BEEN SUBJECTED TO TRAFFIC FOR AT LEAST TWO (2) WEEKS BUT NOT MORE THAN TWO (2) MONTHS, MILL 1 1/2 INCHES AND REPLACE WITH SURFACE ASPHALT CONCRETE MIX. MINIMUM MILL WIDTH SHALL BE EQUAL TO THE WIDTH OF THE BASE ASPHALT PATCH PLUS 12-INCHES EACH SIDE (12" INTO EXISTING A.C.) EXCEPT FOR TYPE A-1 (ONE SIDE). SURFACE ASPHALT CONCRETE MIX SHALL BE R-1/2" OR A-1/2" AS NOTED IN COM DETAIL M-19.01 UNLESS OTHERWISE STATED IN THE PLANS AND/OR SPECIAL PROVISIONS. WHEN LONGITUDINAL PATCHES ARE 6' OR WIDER, THE ASPHALT SHALL BE PLACED BY A SELF PROPELLED MECHANICAL SPREADING AND FINISHING EQUIPMENT IN ACCORDANCE WITH MAG 321.5.2(A)

4. WHEN THIS DIMENSION IS 48-INCHES OR LESS, REMOVE AND REPLACE ALL ASPHALT CONCRETE, BOTH BASE COURSE AND SURFACE COURSE, BETWEEN THE TRENCH AND THE LIP OF GUTTER.

5. AFTER SURFACE ASPHALT CONCRETE HAS BEEN PLACED, ALL MANHOLES, VALVES, STRUCTURES, ETC, SHALL BE ADJUSTED TO GRADE. TRAFFIC SIGNAL DETECTOR LOOPS SHALL BE INSTALLED BEFORE SURFACE A.C. IS PLACED.

6. MEASUREMENT FOR PAYMENT SHALL BE PER MAG SECTION 336.4 EXCEPT FOR THE PAY WIDTH. ALL PAY WIDTHS SHALL BE COMPUTED PER MAG SECTION 336.4 (A) AND AS SHOWN ON THIS DETAIL, UNLESS OTHERWISE NOTED ON THE PLANS OR SPECIAL PROVISIONS. FOR ARTERIAL STREETS, THE MINIMUM PAY WIDTH FOR PAVEMENT REPLACEMENT SHALL BE 42" FOR TYPE "A"; FOR TYPE "B", THE MINIMUM PAY WIDTH SHALL BE 18" TO ACHIEVE A MINIMUM REPLACEMENT WIDTH OF 42". NOTE: NO PAYMENT WILL BE MADE FOR ADDITIONAL PAVEMENT REPLACEMENT AS A RESULT OF A WIDER TRENCH EXCAVATION.

7. SLURRY SEAL SHALL BE REQUIRED FOR STREET CUTS GREATER THAN 300 LF. PLACEMENT AND/OR IN LIEU PAYMENT SHALL BE MADE IN ACCORDANCE WITH MAG SECTION 336.2.4.1 (F) AS DETERMINED BY THE INSPECTOR.

8. THE COST OF THE TOP 12-INCHES OF A.B.C. OR CONTROLLED LOW STRENGTH MATERIAL FOR TYPE "B" AND THE TOP 24-INCHES OF A.B.C. FOR TYPE "A" AND "A-1" SHALL BE INCLUDED IN THE PAVEMENT REPLACEMENT COST. ALSO, NO ADDITIONAL PAYMENT WILL BE MADE FOR PAVEMENT REMOVAL, MILLING AND INSTALLATION OF BOTH BASE COURSE AND SURFACE COURSE PAVEMENT BEYOND THE PAY WIDTH SHOWN IN THIS DETAIL.

9. SEE MAG DETAIL 211 FOR REQUIREMENTS REGARDING THE USE OF PLATING OF TRANSVERSE TRENCHES.

10. THE TOTAL THICKNESS OF THE ASPHALT SHALL BE EQUAL TO THE ADJACENT EXISTING ASPHALT HOWEVER, NOT LESS THAN THAT SPECIFIED IN COM DETAILS M-19.01 OR M-19.03. THE THICKNESS OF THE SURFACE ASPHALT SHALL BE AS SHOWN ON COM DETAILS M-19.01 OR M-19.03. THE THICKNESS OF THE BASE ASPHALT SHALL BE THE TOTAL ASPHALT THICKNESS MINUS THE THICKNESS OF THE SURFACE ASPHALT. THE TYPE OF ASPHALT MIXES SHALL BE PER COM DETAILS M-19.01 OR M-19.03, EXCEPT WHEN AN A-3/4" ASPHALT MIX IS REQUIRED FOR A SURFACE COURSE, A 1/2" ASPHALT MIX WILL BE INSTALLED.

11. WHEN MECHANICALLY COMPACTING BACKFILL MATERIAL, THE BACKFILL MATERIAL SHALL BE WITHIN TWO (2) PERCENTAGE POINTS OF OPTIMUM AS DETERMINED BY AASHTO T-99 (STANDARD PROCTOR) AT THE TIME OF COMPACTION.

12. CLUSTERED TRENCH PATCHES, WITH FOUR FEET OF SEPARATION OR LESS, MUST BE COMBINED TO FORM ONE UNIFORM PATCH AND MEET COM DETAIL M-19.04.1.

13. PAVEMENT PATCHES MUST NOT BE AN IRREGULAR SHAPE.

14. DAMAGED PAVEMENT CAUSED BY CONTRACTOR'S EQUIPMENT MUST ALSO BE INCLUDED AS PART OF THE REPAIR.

mesa·az

STANDARD TRENCH BACKFILL DETAIL - NOTES

DETAIL NO.
M-19.04.2

REV. 03/31/2015

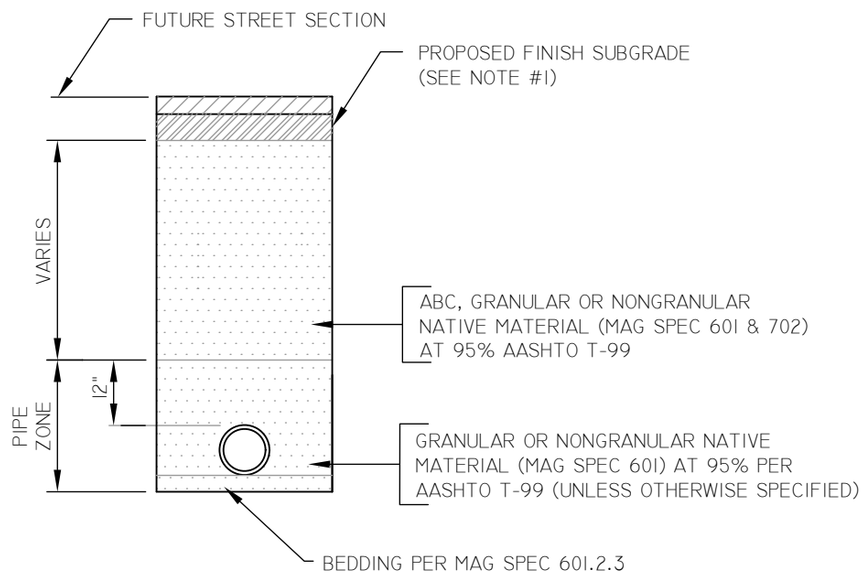

NOTES

1. WHEN STREET ELEVATIONS ARE UNKNOWN, THE PROPOSED FINISH SUBGRADE WILL BE THE ADJACENT EXISTING GROUND ELEVATION OR AS OTHERWISE DIRECTED BY THE ENGINEER.

2. WHEN MECHANICALLY COMPACTING BACKFILL MATERIAL, THE MOISTURE CONTENT OF THE BACKFILL MATERIAL SHALL BE WITHIN TWO (2) PERCENTAGE POINTS OF OPTIMUM AS DETERMINED BY AASHTO T-99 (STANDARD PROCTOR) AT THE TIME OF COMPACTION.

NOT TO SCALE

mesa·az

STANDARD TRENCH BACKFILL DETAIL FOR TRENCHES
WITHIN FUTURE ROADWAY PRISMS AND ALLEYS

DETAIL NO.
M-19.05

REV. 01/31/14

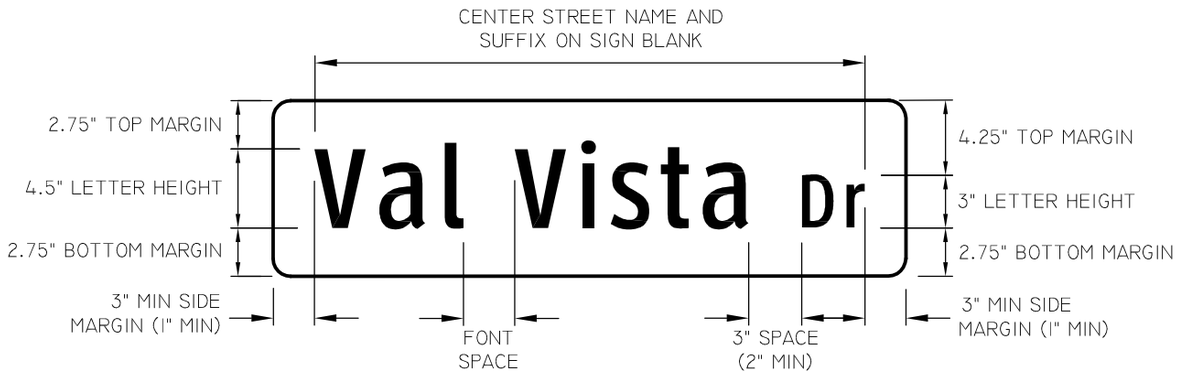

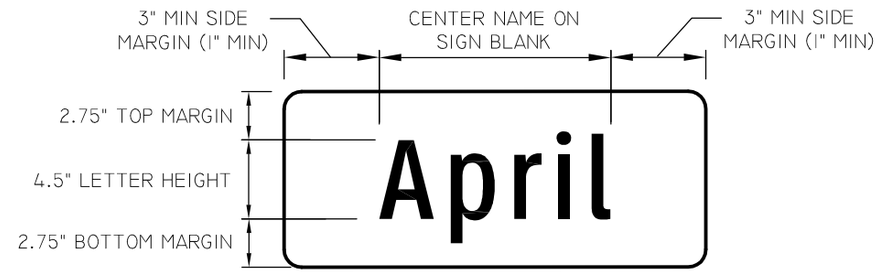

10" PUBLIC STREET NAME SIGN - WITHOUT SUFFIX

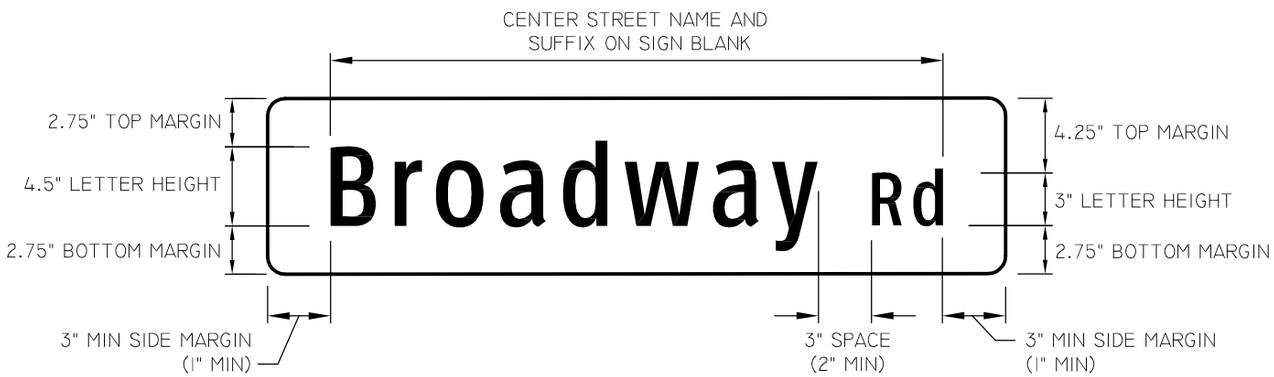

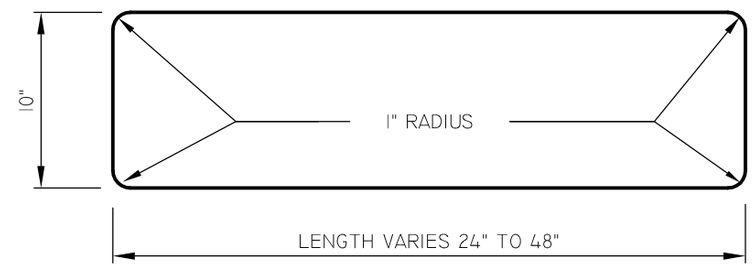

DETAIL "A" - BLANK DIMENSIONS

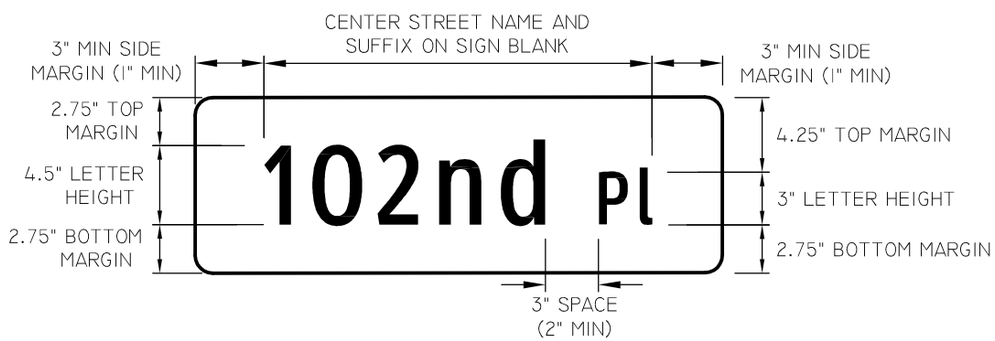

10" PUBLIC STREET NAME SIGNS - WITH SUFFIX

SEE M-20.01.2
FOR NOTES

NOT TO SCALE

mesa·az

10" PUBLIC STREET NAME SIGN

DETAIL NO.
M-20.01.1

REV. 01/31/14

NOTES

1. ALL REFLECTIVE SHEETING MATERIAL(S) SHALL BE PRESSURE SENSITIVE ASTM TYPE IV WIDE ANGLE WHITE PRISMATIC SHEETING OR APPROVED EQUAL.

2. ALL TRANSPARENT ACRYLIC, PRESSURE-SENSITIVE FILM SHALL BE 3M #1177 GREEN ELECTRO CUT FILM OR APPROVED EQUAL.

3. THESE SIGNS ARE CONSTRUCTED BY APPLYING WHITE SHEETING TO THE ENTIRE BLANK. ON TOP OF THIS SHEETING A GREEN TRANSLUCENT PRESSURE-SENSITIVE FILM FROM WHICH THE LEGEND HAS BEEN CUT AND REMOVED IS APPLIED. THUS THE GREEN BACKGROUND IS APPLIED ON TOP OF THE WHITE SHEETING RESULTING IN A SIGN WITH A WHITE LEGEND AND A GREEN BACKGROUND.

4. LETTER FONT SHALL BE INITIAL UPPER- AND LOWER-CASE CLEARVIEW "2-W".

5. SIDE MARGINS AND SPACING BETWEEN STREET NAME AND SUFFIX ARE SHOWN PER 2009 MUTCD AND ARE TO BE USED UP TO THE MAXIMUM SIGN BLANK SIZE OF 48" IN LENGTH. MINIMUM REQUIRED DIMENSIONS (SHOWN IN BRACKETS) MAY BE USED WHEN SIGNS WOULD OTHERWISE EXCEED THE MAXIMUM LENGTH.

6. 10" SIGN BLANKS SHALL:
   - HAVE DIMENSIONS PER DETAIL "A" ON COM DETAIL M-20.01.1;
   - BE 5052-H38 ALLOY TREATED ALUMINUM WITH ALODINE 1200 CONVERSION COATING;
   - BE 0.125" THICK WITH ROUNDED CORNERS PER DETAIL "A" ON COM DETAIL M-20.01.1.

7. STREET NAME SPELLINGS AND TYPES CAN BE OBTAINED FROM THE "STREET AREA DIRECTORY" AVAILABLE ON THE CITY OF MESA'S WEBSITE (WWW.MESAAZ.GOV).

8. ALL PUBLIC STREET NAME SIGNS ARE SUBJECT TO APPROVAL BY THE CITY OF MESA PRIOR TO INSTALLATION. CONTACT THE CITY OF MESA SIGN SHOP AT 480-644-3175 FOR ASSISTANCE AND APPROVAL OF SIGN LAYOUT.

9. USE THIS SIGN FOR PUBLIC STREETS WITH A SPEED LIMIT OF 25 MPH.

SEE M-20.01.1
FOR DETAIL

mesa·az

10" PUBLIC STREET NAME SIGN - NOTES

DETAIL NO.
M-20.01.2

REV. 01/31/14

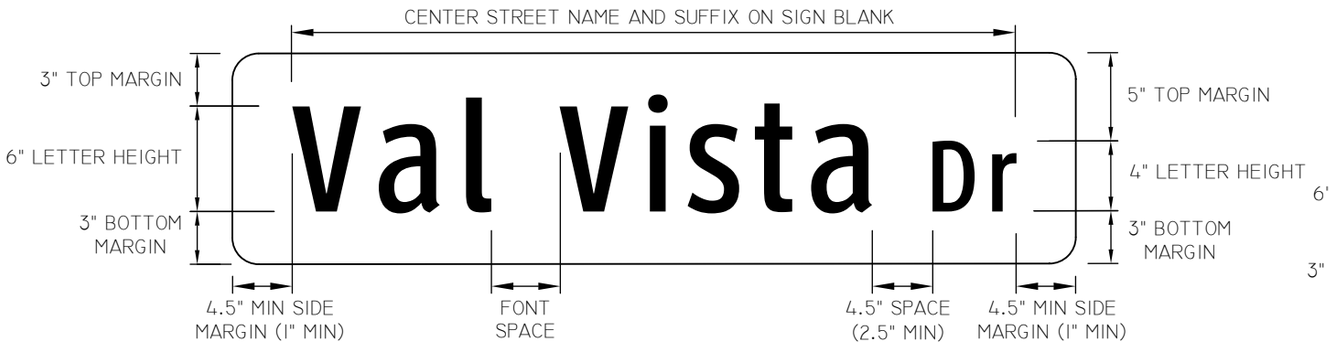

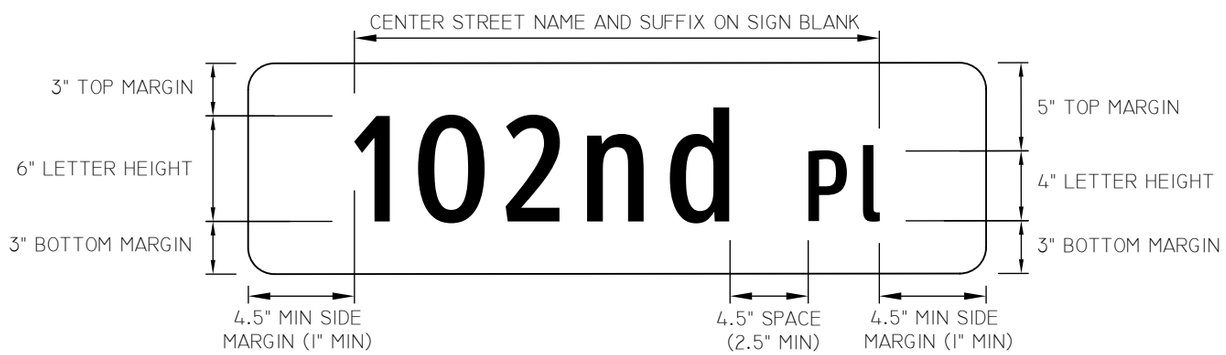

12" PUBLIC STREET NAME SIGNS - WITH SUFFIX

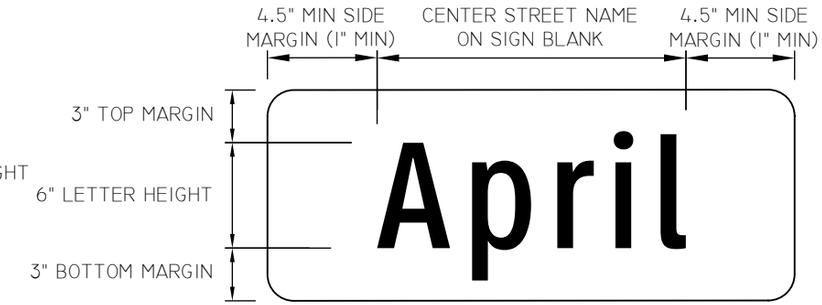

12" PUBLIC STREET NAME SIGN - WITHOUT SUFFIX

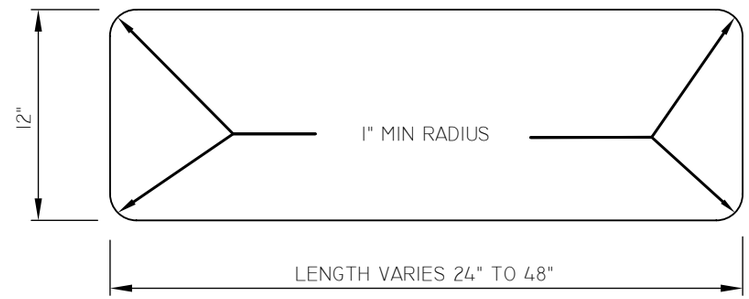

DETAIL "A" - BLANK DIMENSIONS

SEE M-20.02.2 FOR NOTES

NOT TO SCALE

mesa·az

12" PUBLIC STREET NAME SIGN

DETAIL NO.
M-20.02.1

REV. 01/31/14

NOTES

1. ALL REFLECTIVE SHEETING MATERIAL(S) SHALL BE PRESSURE SENSITIVE ASTM TYPE XI 3M #4090 WHITE DG CUBED SHEETING OR APPROVED EQUAL.ALL TRANSPARENT ACRYLIC, PRESSURE-SENSITIVE FILM SHALL BE 3M #1177 GREEN ELECTRO CUT FILM OR APPROVED EQUAL.

2. THESE SIGNS ARE CONSTRUCTED BY APPLYING WHITE SHEETING TO THE ENTIRE BLANK. ON TOP OF THIS SHEETING A GREEN TRANSLUCENT PRESSURE-SENSITIVE FILM FROM WHICH THE LEGEND HAS BEEN CUT AND REMOVED IS APPLIED. THUS THE GREEN BACKGROUND IS APPLIED ON TOP OF THE WHITE SHEETING RESULTING IN A SIGN WITH A WHITE LEGEND AND A GREEN BACKGROUND.

3. LETTER FONT SHALL BE INITIAL UPPER- AND LOWER-CASE CLEARVIEW "2-W".

4. SIDE MARGINS AND SPACING BETWEEN STREET NAME AND SUFFIX ARE SHOWN PER 2009 MUTCD AND ARE TO BE USED UP TO THE MAXIMUM SIGN BLANK SIZE OF 48" IN LENGTH. MINIMUM REQUIRED DIMENSIONS (SHOWN IN BRACKETS) MAY BE USED WHEN SIGNS WOULD OTHERWISE EXCEED THE MAXIMUM LENGTH

5. 12" SIGN BLANKS SHALL:
   - HAVE DIMENSIONS PER DETAIL "A" ON COM DETAIL M-20.02.1;
   - BE 5052-H38 ALLOY TREATED ALUMINUM WITH ALODINE 1200 CONVERSION COATING;
   - BE 0.125" THICK WITH ROUNDED CORNERS PER DETAIL "A" ON COM DETAIL M-20.02.1.

7. STREET NAME SPELLINGS AND TYPES CAN BE OBTAINED FROM THE "STREET AREA DIRECTORY" AVAILABLE ON THE CITY OF MESA'S WEBSITE (WWW.MESAAZ.GOV).

8. ALL PUBLIC STREET NAME SIGNS ARE SUBJECT TO APPROVAL BY THE CITY OF MESA PRIOR TO INSTALLATION. CONTACT THE CITY OF MESA SIGN SHOP AT 480-644-3175 FOR ASSISTANCE AND APPROVAL OF SIGN LAYOUT.

9. USE THIS SIGN FOR PUBLIC STREETS WITH A SPEED LIMIT OF 30 MPH OR GREATER.

SEE M-20.02.1
FOR DETAIL

mesa·az

12" PUBLIC STREET NAME SIGN - NOTES

DETAIL NO.
M-20.02.2

REV. 01/31/14

DEAD END WITH 10" PUBLIC STREET NAME COMBINATION SIGN

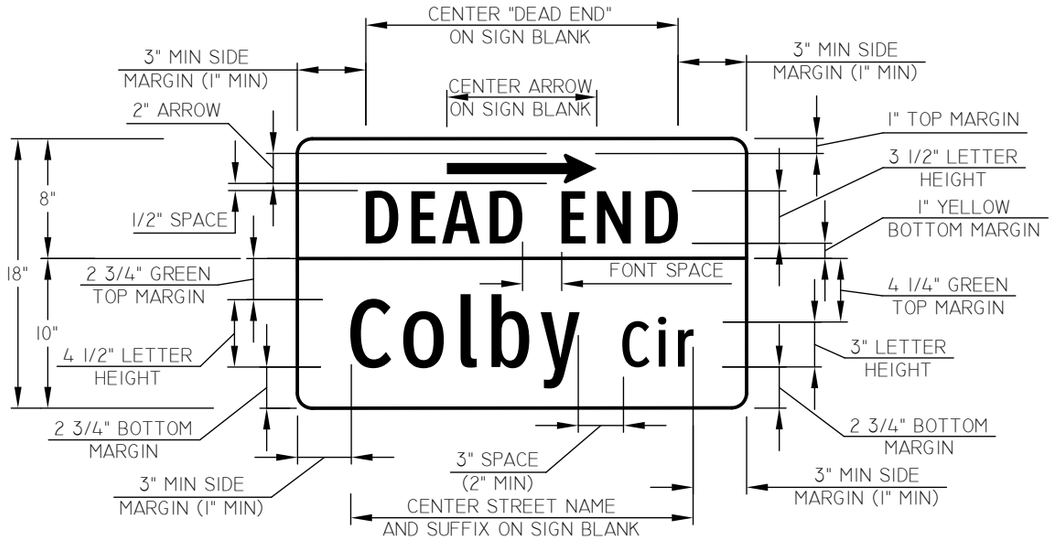

DEAD END WITH 12" PUBLIC STREET NAME COMBINATION SIGN

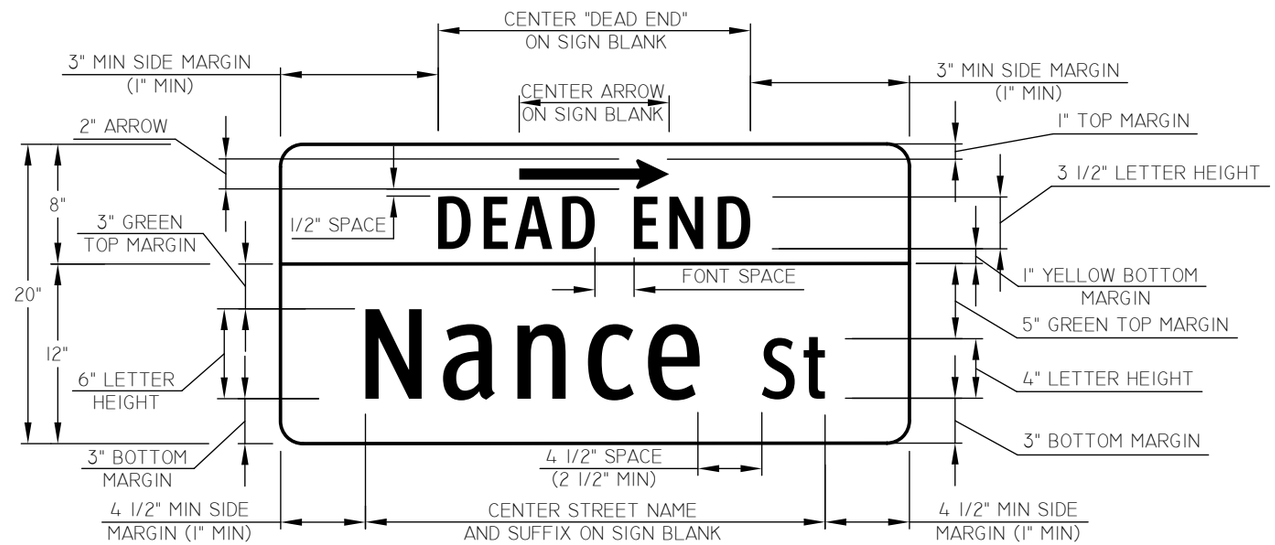

NOTES

1. ALL REFLECTIVE SHEETING MATERIAL(S) SHALL BE PRESSURE SENSITIVE ASTM TYPE IV WIDE ANGLE WHITE AND YELLOW PRISMATIC SHEETING OR APPROVED EQUAL.
2. ALL ACRYLIC, PRESSURE-SENSITIVE FILM SHALL BE 3M #1177 GREEN ELECTRO CUT (EC) FILM AND 3M #7725-12 BLACK EC FILM OR APPROVED EQUAL.
3. THESE SIGNS ARE CONSTRUCTED BY APPLYING WHITE SHEETING TO THE LOWER 10"/12" PORTION OF THE SIGN BLANK AND YELLOW SHEETING TO THE TOP 8" PORTION OF THE SIGN BLANK. ON TOP OF THE WHITE SHEETING A GREEN TRANSLUCENT PRESSURE-SENSITIVE FILM FROM WHICH THE LEGEND HAS BEEN CUT AND REMOVED IS APPLIED. THUS THE GREEN BACKGROUND IS APPLIED ON TOP OF THE WHITE SHEETING RESULTING IN THE LOWER PORTION OF THE SIGN HAVING A WHITE LEGEND AND A GREEN BACKGROUND. ON TOP OF THE YELLOW SHEETING, THE BLACK "DEAD END" AND BLACK ARROW ARE APPLIED. THUS, THE TOP PORTION OF THE SIGN WILL HAVE A YELLOW BACKGROUND AND A BLACK LEGEND.
4. LETTER FONT SHALL BE INITIAL UPPER- AND LOWER-CASE "2-W" FOR THE LOWER PORTION OF THE SIGN (STREET NAME) AND UPPER-CASE CLEARVIEW "2-B" FOR THE UPPER PORTION OF THE SIGN ("DEAD END" AND ARROW).
5. SIDE MARGINS AND SPACING BETWEEN STREET NAME AND SUFFIX ARE SHOWN PER 2009 MUTCD AND ARE TO BE USED UP TO THE MAXIMUM SIGN BLANK SIZE OF 48" IN LENGTH. MINIMUM REQUIRED DIMENSIONS (SHOWN IN BRACKETS) MAY BE USED WHEN SIGNS WOULD OTHERWISE EXCEED THE MAXIMUM LENGTH.
6. 18"/20" SIGN BLANKS SHALL:
   - HAVE DIMENSIONS PER DETAIL "A"/DETAIL "B";
   - BE 5052-H38 ALLOY TREATED ALUMINUM WITH ALODINE 1200 CONVERSION COATING;
   - BE 0.125" THICK WITH ROUNDED CORNERS PER DETAIL "A"/DETAIL "B".
7. STREET NAME SPELLINGS AND TYPES CAN BE OBTAINED FROM THE "STREET AREA DIRECTORY" AVAILABLE ON THE CITY OF MESA'S WEBSITE (WWW.MESAAZ.GOV).
8. ALL PUBLIC STREET NAME SIGNS ARE SUBJECT TO APPROVAL BY THE CITY OF MESA PRIOR TO INSTALLATION. CONTACT THE CITY OF MESA SIGN SHOP AT 480-644-3175 FOR ASSISTANCE AND APPROVAL OF SIGN LAYOUT.

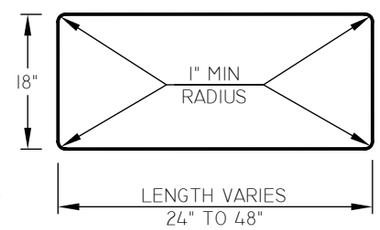

DETAIL "A"
BLANK DIMENSIONS

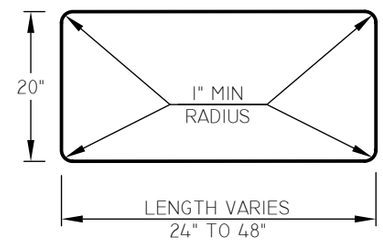

DETAIL "B"
BLANK DIMENSIONS

BLACK ARROW

NOT TO SCALE

DEAD END STREET COMBINATION SIGN

DETAIL NO. M-20.03

REV. 01/31/14

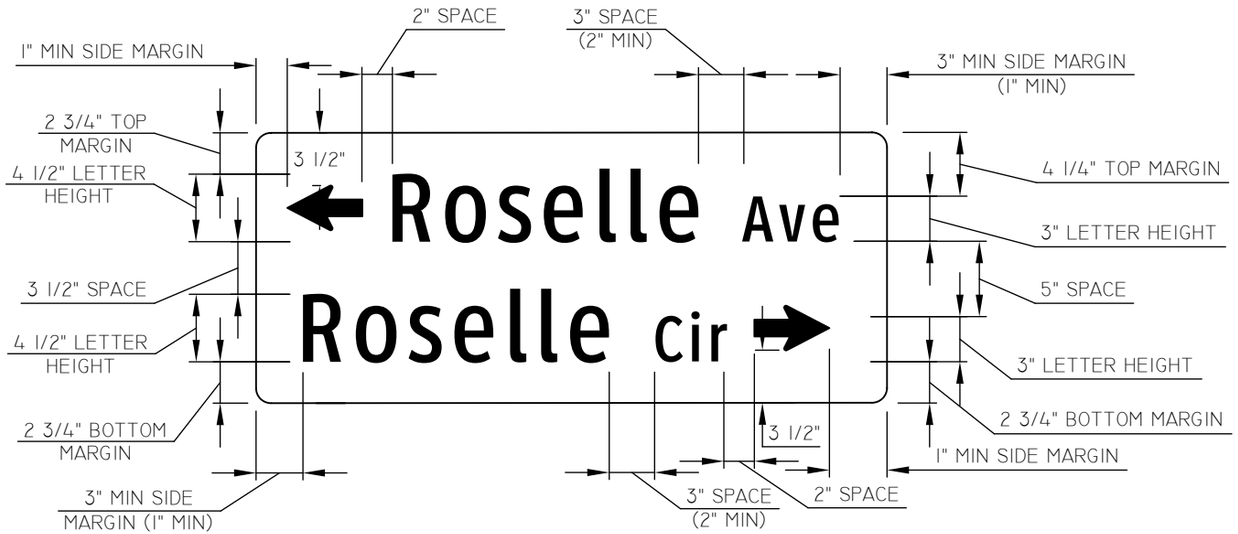

DOUBLE STREET NAME SIGN

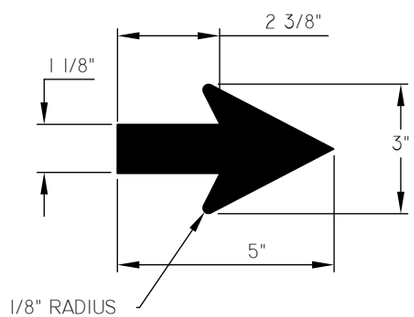

WHITE ARROW

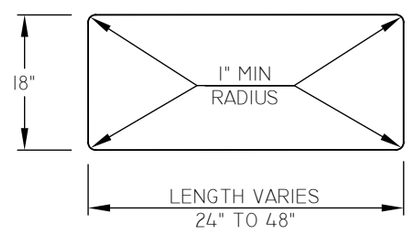

DETAIL "A"
BLANK DIMENSIONS

NOTES

1. ALL REFLECTIVE SHEETING MATERIAL(S) SHALL BE PRESSURE SENSITIVE ASTM TYPE IV WIDE ANGLE WHITE PRISMATIC SHEETING OR APPROVED EQUAL.
2. ALL TRANSPARENT ACRYLIC, PRESSURE-SENSITIVE FILM SHALL BE 3M #1177 GREEN ELECTRO CUT FILM OR APPROVED EQUAL.
3. THESE SIGNS ARE CONSTRUCTED BY APPLYING WHITE SHEETING TO THE ENTIRE BLANK. ON TOP OF THIS SHEETING A GREEN TRANSLUCENT PRESSURE-SENSITIVE FILM FROM WHICH THE LEGEND HAS BEEN CUT AND REMOVED IS APPLIED. THUS THE GREEN BACKGROUND IS APPLIED ON TOP OF THE WHITE SHEETING RESULTING IN A SIGN WITH A WHITE LEGEND AND A GREEN BACKGROUND.
4. LETTER FONT SHALL BE INITIAL UPPER- AND LOWER-CASE CLEARVIEW "2-W".
5. SIDE MARGINS AND SPACING BETWEEN STREET NAME AND SUFFIX ARE SHOWN PER 2009 MUTCD AND ARE TO BE USED UP TO THE MAXIMUM SIGN BLANK SIZE OF 48" IN LENGTH. MINIMUM REQUIRED DIMENSIONS (SHOWN IN BRACKETS) MAY BE USED WHEN SIGNS WOULD OTHERWISE EXCEED THE MAXIMUM LENGTH.
6. 18" SIGN BLANKS SHALL:
   - HAVE DIMENSIONS PER DETAIL "A";
   - BE 5052-H38 ALLOY TREATED ALUMINUM WITH ALODINE 1200 CONVERSION COATING;
   - BE 0.125" THICK WITH ROUNDED CORNERS PER DETAIL "A".
7. STREET NAME SPELLINGS AND TYPES CAN BE OBTAINED FROM THE "STREET AREA DIRECTORY" AVAILABLE ON THE CITY OF MESA'S WEBSITE (WWW.MESAAZ.GOV).
8. ALL PUBLIC STREET NAME SIGNS ARE SUBJECT TO APPROVAL BY THE CITY OF MESA PRIOR TO INSTALLATION. CONTACT THE CITY OF MESA SIGN SHOP AT 480-644-3175 FOR ASSISTANCE AND APPROVAL OF SIGN LAYOUT.

NOT TO SCALE

mesa·az

DOUBLE STREET NAME SIGN

DETAIL NO.
M-20.04

REV. 01/31/14

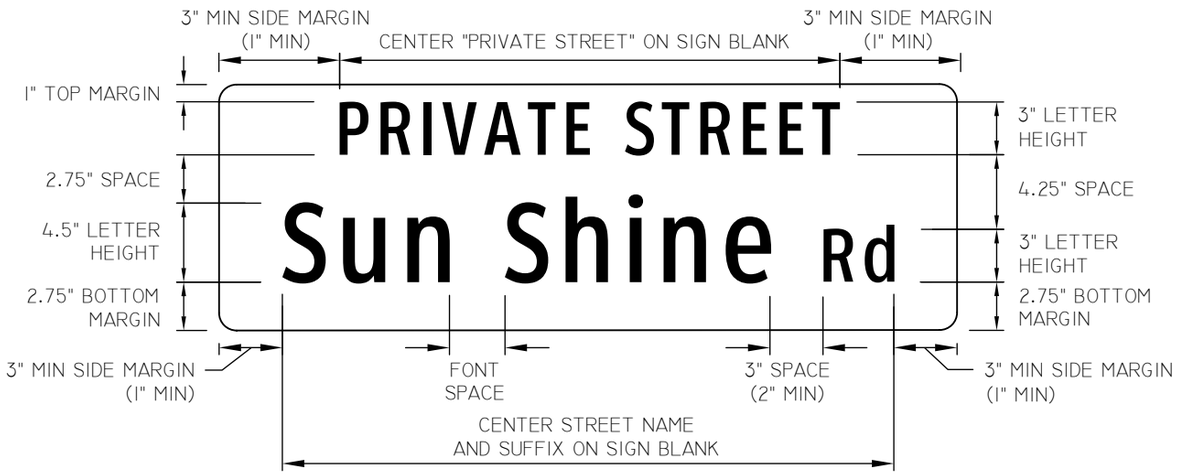

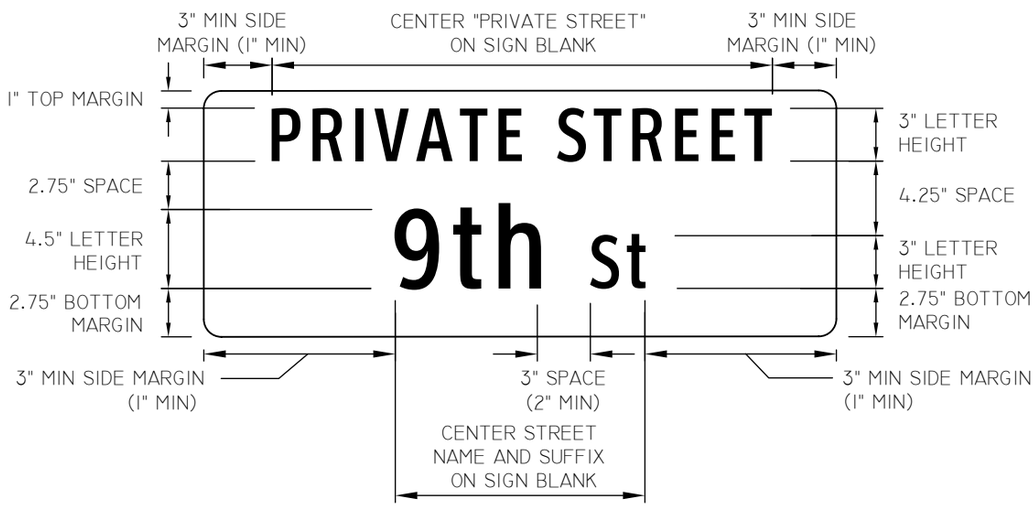

14" PRIVATE STREET NAME SIGNS

NOTES

1. ALL REFLECTIVE SHEETING MATERIAL(S) SHALL BE PRESSURE SENSITIVE ASTM TYPE IV WIDE ANGLE WHITE PRISMATIC SHEETING OR APPROVED EQUAL.
2. ALL TRANSPARENT ACRYLIC, PRESSURE-SENSITIVE FILM SHALL BE 3M #1175 BLUE ELECTRO CUT FILM OR APPROVED EQUAL.
3. THESE SIGNS ARE CONSTRUCTED BY APPLYING WHITE SHEETING TO THE ENTIRE BLANK. ON TOP OF THIS SHEETING A BLUE TRANSLUCENT PRESSURE-SENSITIVE FILM FROM WHICH THE LEGEND HAS BEEN CUT AND REMOVED IS APPLIED. THUS THE BLUE BACKGROUND IS APPLIED ON TOP OF THE WHITE SHEETING RESULTING IN A SIGN WITH A WHITE LEGEND AND A BLUE BACKGROUND.
4. LETTER FONT SHALL BE INITIAL UPPER- AND LOWER-CASE CLEARVIEW "2-W".
5. SIDE MARGINS AND SPACING BETWEEN STREET NAME AND SUFFIX ARE SHOWN PER 2009 MUTCD AND ARE TO BE USED UP TO THE MAXIMUM SIGN BLANK SIZE OF 48" IN LENGTH. MINIMUM REQUIRED DIMENSIONS (SHOWN IN BRACKETS) MAY BE USED WHEN SIGNS WOULD OTHERWISE EXCEED THE MAXIMUM LENGTH.
6. 14" SIGN BLANKS SHALL:
   - HAVE DIMENSIONS PER DETAIL "A";
   - BE 5052-H38 ALLOY TREATED ALUMINUM WITH ALODINE 1200 CONVERSION COATING;
   - BE 0.125" THICK WITH ROUNDED CORNERS PER DETAIL "A".
7. STREET NAME SPELLINGS AND TYPES CAN BE OBTAINED FROM THE "STREET AREA DIRECTORY" AVAILABLE ON THE CITY OF MESA'S WEBSITE (WWW.MESAAZ.GOV).
8. WHERE A PRIVATE STREET INTERSECTS A PUBLIC STREET, THE SIGN FOR THE PUBLIC STREET SHALL BE WHITE ON BLUE, AND DIMENSIONS SHALL BE PER COM DETAIL M-20.01.
9. ALTERNATE BACKGROUND COLORS AND/OR LETTER FONTS MAY BE APPROVED BY THE CITY TRAFFIC ENGINEER.
10. ALL PRIVATE STREET NAME SIGNS ARE SUBJECT TO APPROVAL BY THE CITY OF MESA PRIOR TO INSTALLATION. CONTACT THE CITY OF MESA SIGN SHOP AT 480-644-3175 FOR ASSISTANCE AND APPROVAL OF SIGN LAYOUT.
11. USE THIS SIGN FOR PRIVATE STREETS WITH A SPEED LIMIT OF 25 MPH.

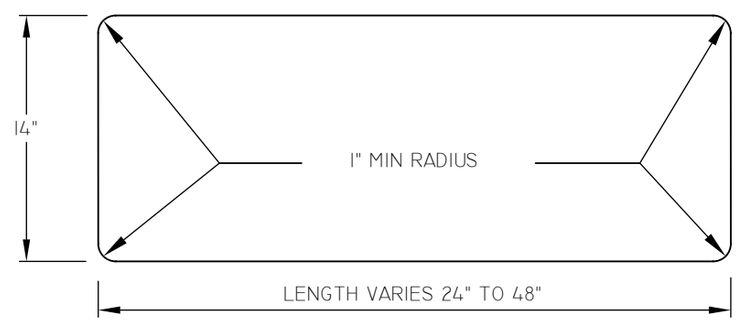

DETAIL "A" - BLANK DIMENSIONS

NOT TO SCALE

14" PRIVATE STREET NAME SIGN

DETAIL NO. M-21.01

REV. 01/31/14

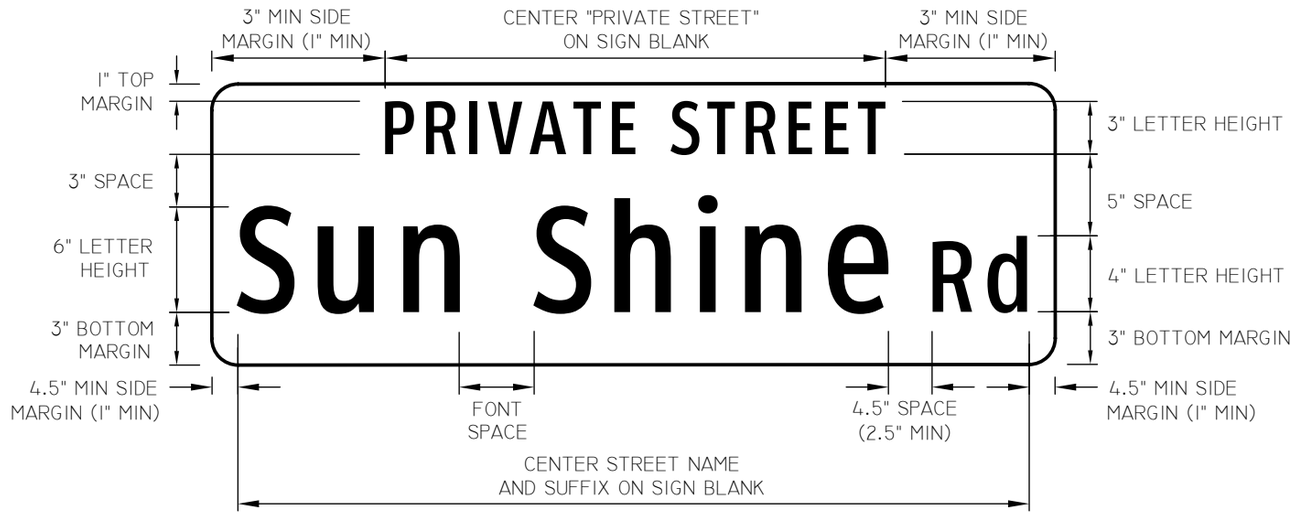

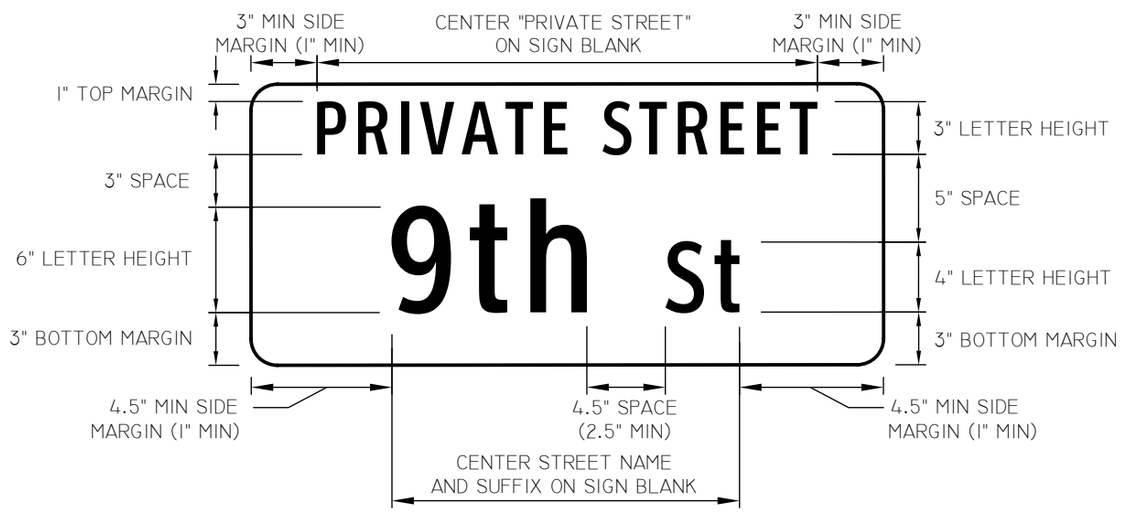

16" PRIVATE STREET NAME SIGNS

NOTES

1. ALL REFLECTIVE SHEETING MATERIAL(S) SHALL BE PRESSURE SENSITIVE ASTM TYPE XI 3M #4090 WHITE DG CUBED SHEETING OR APPROVED EQUAL.
2. ALL TRANSPARENT ACRYLIC, PRESSURE-SENSITIVE FILM SHALL BE 3M #1175 BLUE ELECTRO CUT FILM OR APPROVED EQUAL.
3. THESE SIGNS ARE CONSTRUCTED BY APPLYING WHITE SHEETING TO THE ENTIRE BLANK. ON TOP OF THIS SHEETING A BLUE TRANSLUCENT PRESSURE-SENSITIVE FILM FROM WHICH THE LEGEND HAS BEEN CUT AND REMOVED IS APPLIED. THUS THE BLUE BACKGROUND IS APPLIED ON TOP OF THE WHITE SHEETING RESULTING IN A SIGN WITH A WHITE LEGEND AND A BLUE BACKGROUND.
4. LETTER FONT SHALL BE INITIAL UPPER- AND LOWER-CASE CLEARVIEW "2-W".
5. SIDE MARGINS AND SPACING BETWEEN STREET NAME AND SUFFIX ARE SHOWN PER 2009 MUTCD AND ARE TO BE USED UP TO THE MAXIMUM SIGN BLANK SIZE OF 48" IN LENGTH. MINIMUM REQUIRED DIMENSIONS (SHOWN IN BRACKETS) MAY BE USED WHEN SIGNS WOULD OTHERWISE EXCEED THE MAXIMUM LENGTH.
6. 16" SIGN BLANKS SHALL:
   - HAVE DIMENSIONS PER DETAIL "A";
   - BE 5052-H38 ALLOY TREATED ALUMINUM WITH ALODINE 1200 CONVERSION COATING;
   - BE 0.125" THICK WITH ROUNDED CORNERS PER DETAIL "A".
7. STREET NAME SPELLINGS AND TYPES CAN BE OBTAINED FROM THE "STREET AREA DIRECTORY" AVAILABLE ON THE CITY OF MESA'S WEBSITE (WWW.MESAAZ.GOV).
8. WHERE A PRIVATE STREET INTERSECTS A PUBLIC STREET, THE SIGN FOR THE PUBLIC STREET SHALL BE WHITE ON BLUE, AND DIMENSIONS SHALL BE PER COM DETAIL M-20.02.
9. ALTERNATE BACKGROUND COLORS AND/OR LETTER FONTS MAY BE APPROVED BY THE CITY TRAFFIC ENGINEER.
10. ALL PRIVATE STREET NAME SIGNS ARE SUBJECT TO APPROVAL BY THE CITY OF MESA PRIOR TO INSTALLATION. CONTACT THE CITY OF MESA SIGN SHOP AT 480-644-3175 FOR ASSISTANCE AND APPROVAL OF SIGN LAYOUT.
11. USE THIS SIGN FOR PRIVATE STREETS WITH A SPEED LIMIT OF 30 MPH OR GREATER.

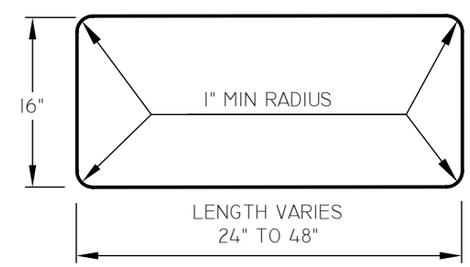

DETAIL "A" - BLANK DIMENSIONS

NOT TO SCALE

mesa·az

16" PRIVATE STREET NAME SIGN

DETAIL NO. M-21.02

REV. 01/31/14

NOTES

1. ON PUBLIC STREETS WITH A SPEED LIMIT OF:
   - 25 MPH: USE A COM DETAIL M-20.01 STREET NAME SIGN, AN 18" TALL DEAD END SIGN PER COM DETAIL M-20.03, OR A DOUBLE STREET NAME SIGN PER COM DETAIL M-20.04, WHICHEVER IS APPLICABLE.
   - 30 MPH OR GREATER: USE A COM DETAIL M-20.02 STREET NAME SIGN, A 20" TALL DEAD END SIGN PER COM DETAIL M-20.03, OR A DOUBLE STREET NAME SIGN PER COM DETAIL M-20.04, WHICHEVER IS APPLICABLE.
2. SEE COM DETAIL M-22.03 FOR STREET NAME SIGN POLE LOCATION AT INTERSECTIONS.
3. SEE COM DETAIL M-22.02 FOR SIGN MOUNTING HEIGHT REQUIREMENTS.

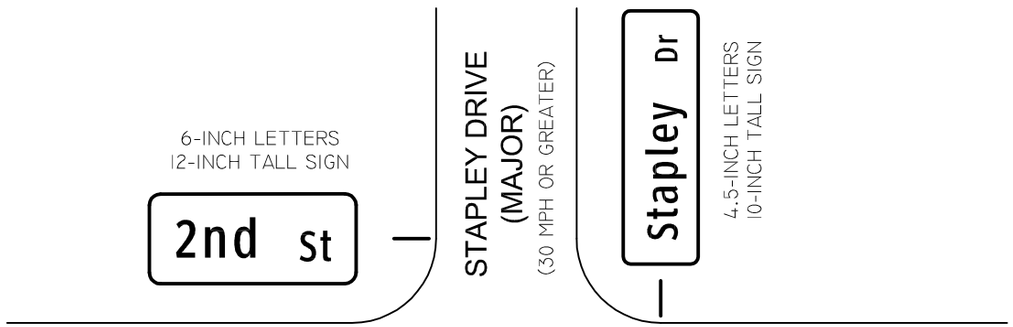

"T" - INTERSECTION WITH CUL-DE-SAC/DEAD ENDS/ NO OUTLET

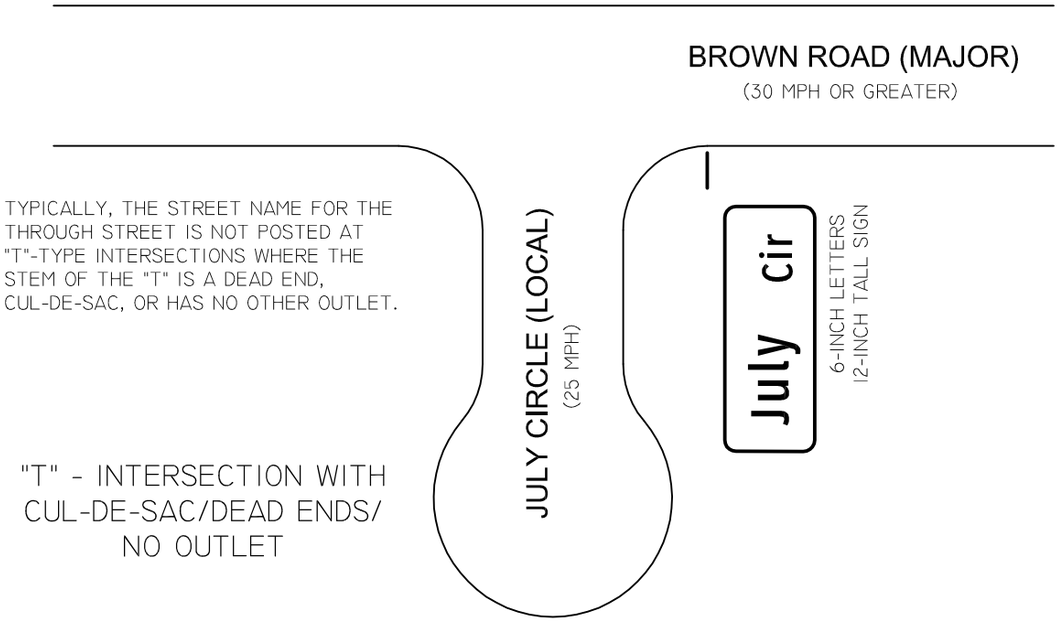

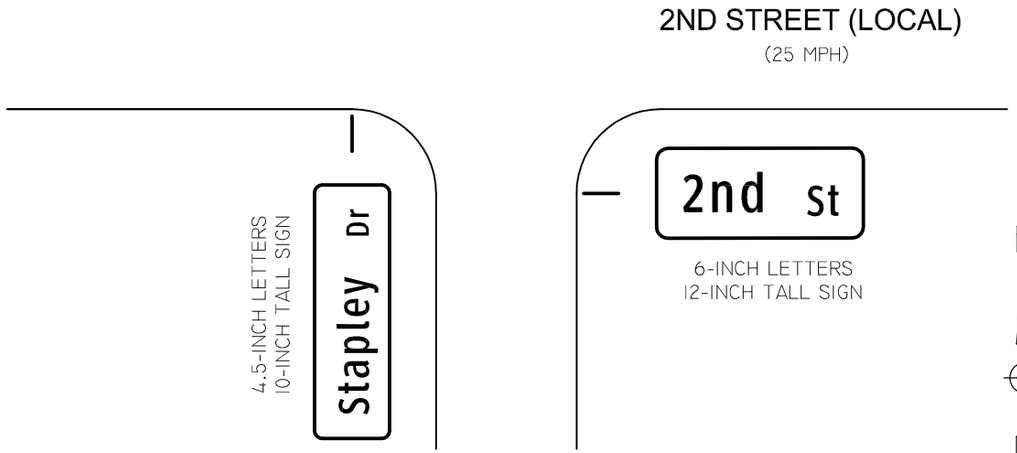

ARTERIAL/COLLECTOR TO LOCAL
4-WAY INTERSECTION

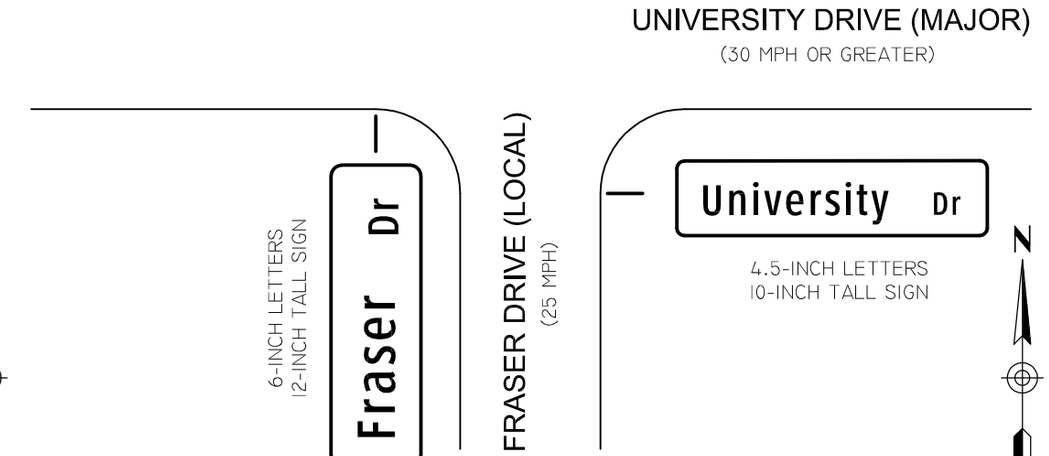

ARTERIAL/COLLECTOR TO LOCAL
"T" - INTERSECTION

NOT TO SCALE

mesa·az

STREET NAME SIGNS, ARTERIAL/COLLECTOR TO LOCAL

DETAIL NO.
M-21.03

REV. 02/11/2015

NOTES

1. ON PUBLIC STREETS WITH A SPEED LIMIT OF:
   - 25 MPH: USE A COM DETAIL M-20.01 STREET NAME SIGN, AN 18" TALL DEAD END SIGN PER COM DETAIL M-20.03, OR A DOUBLE STREET NAME SIGN PER COM DETAIL M-20.04, WHICHEVER IS APPLICABLE.
   - 30 MPH OR GREATER: USE A COM DETAIL M-20.02 STREET NAME SIGN, A 20" TALL DEAD END SIGN PER COM DETAIL M-20.03, OR A DOUBLE STREET NAME SIGN PER COM DETAIL M-20.04, WHICHEVER IS APPLICABLE.
2. SEE COM DETAIL M-22.03 FOR STREET NAME SIGN POLE LOCATION AT INTERSECTIONS
3. SEE COM DETAIL M-22.02 FOR SIGN MOUNTING HEIGHT REQUIREMENTS.

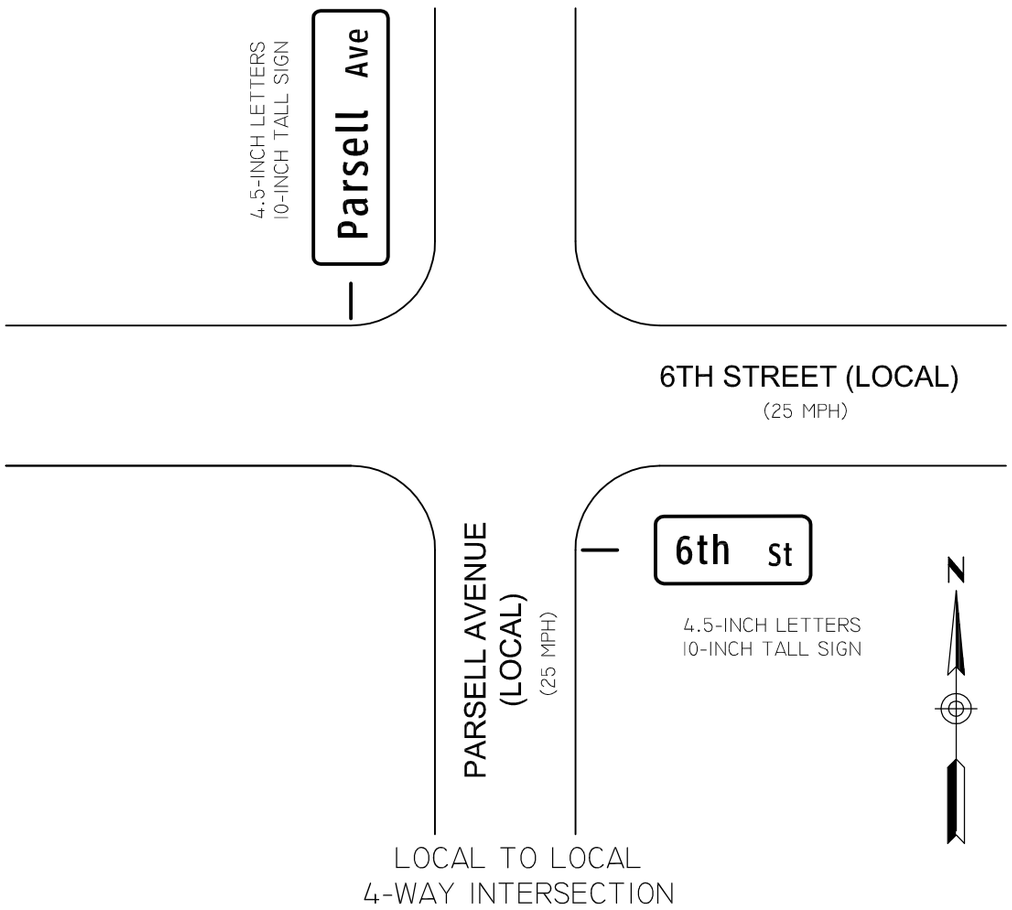

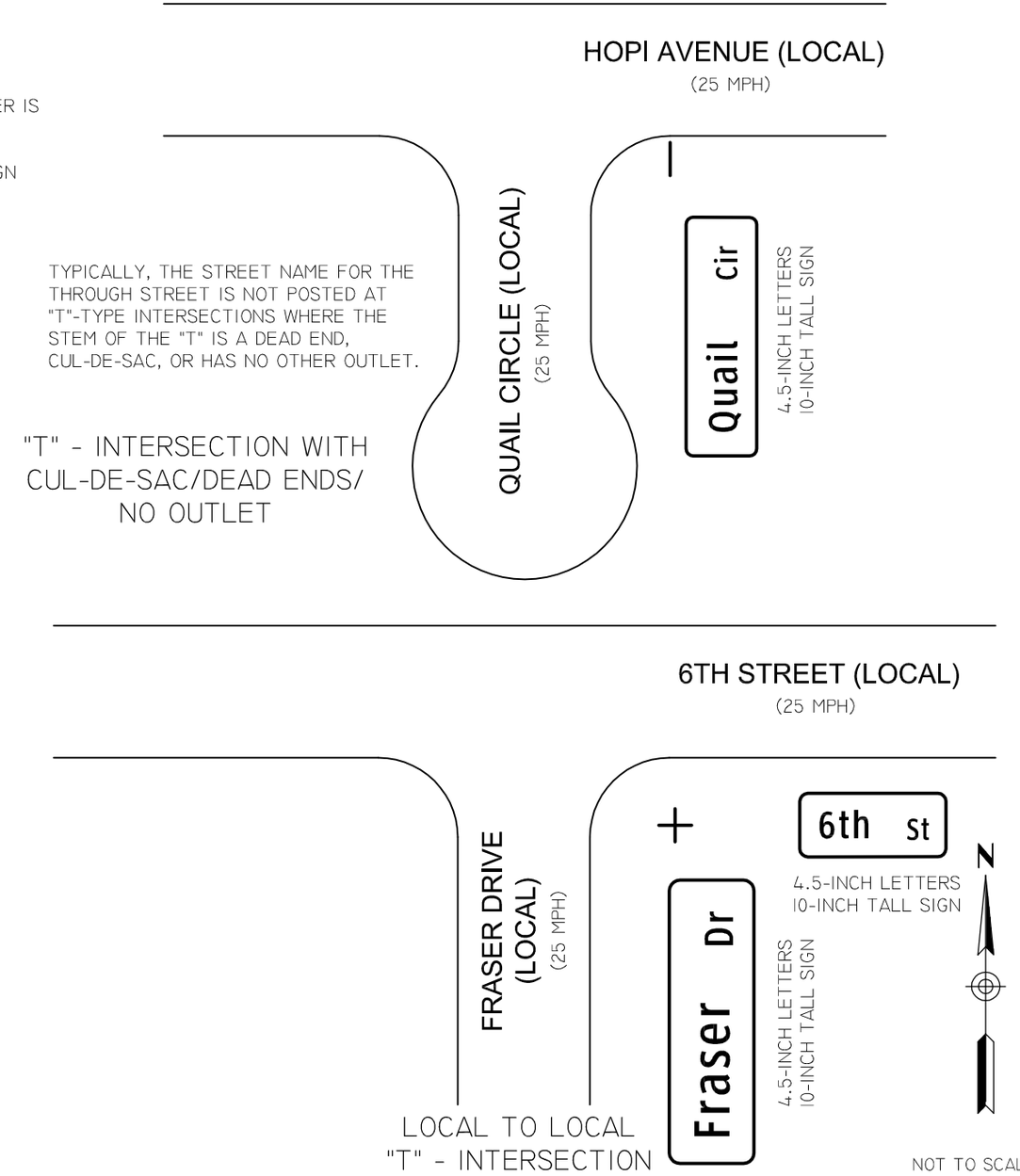

NOT TO SCALE

mesa·az

STREET NAME SIGNS, LOCAL TO LOCAL

DETAIL NO.
M-21.04

REV. 02/11/2015

NOTE

1. SEE COM DETAILS M-21.07 & M-21.08 FOR SIGN LAYOUT INFORMATION.

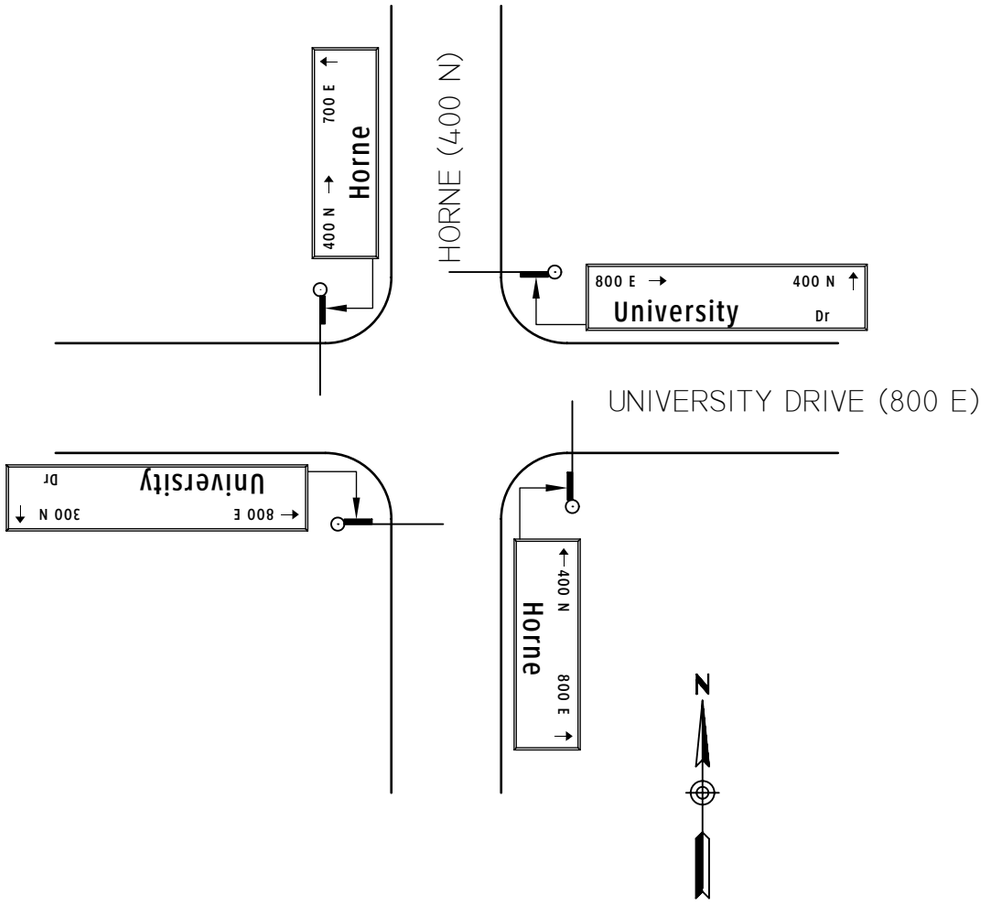

NORTHEAST AREA EXAMPLE

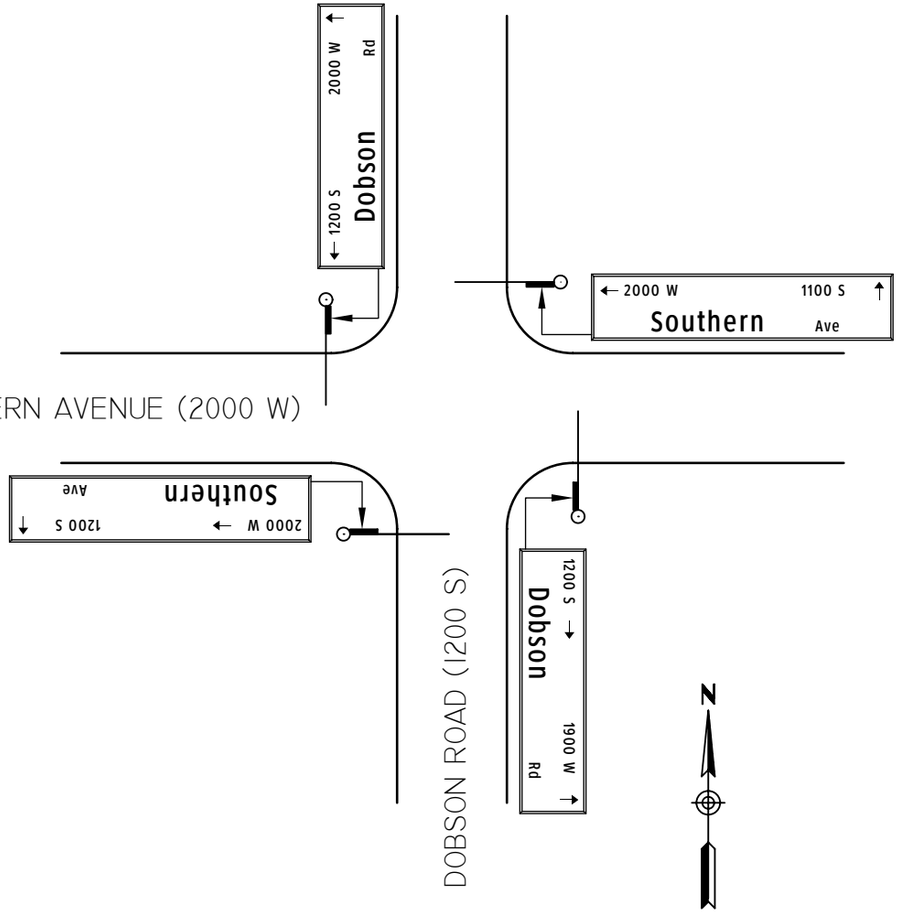

SOUTHWEST AREA EXAMPLE

NOT TO SCALE

mesa·az

CONVENTIONAL METRO SIGNS ADDRESSING SCHEME

DETAIL NO.
M-21.05

REV. 01/31/14

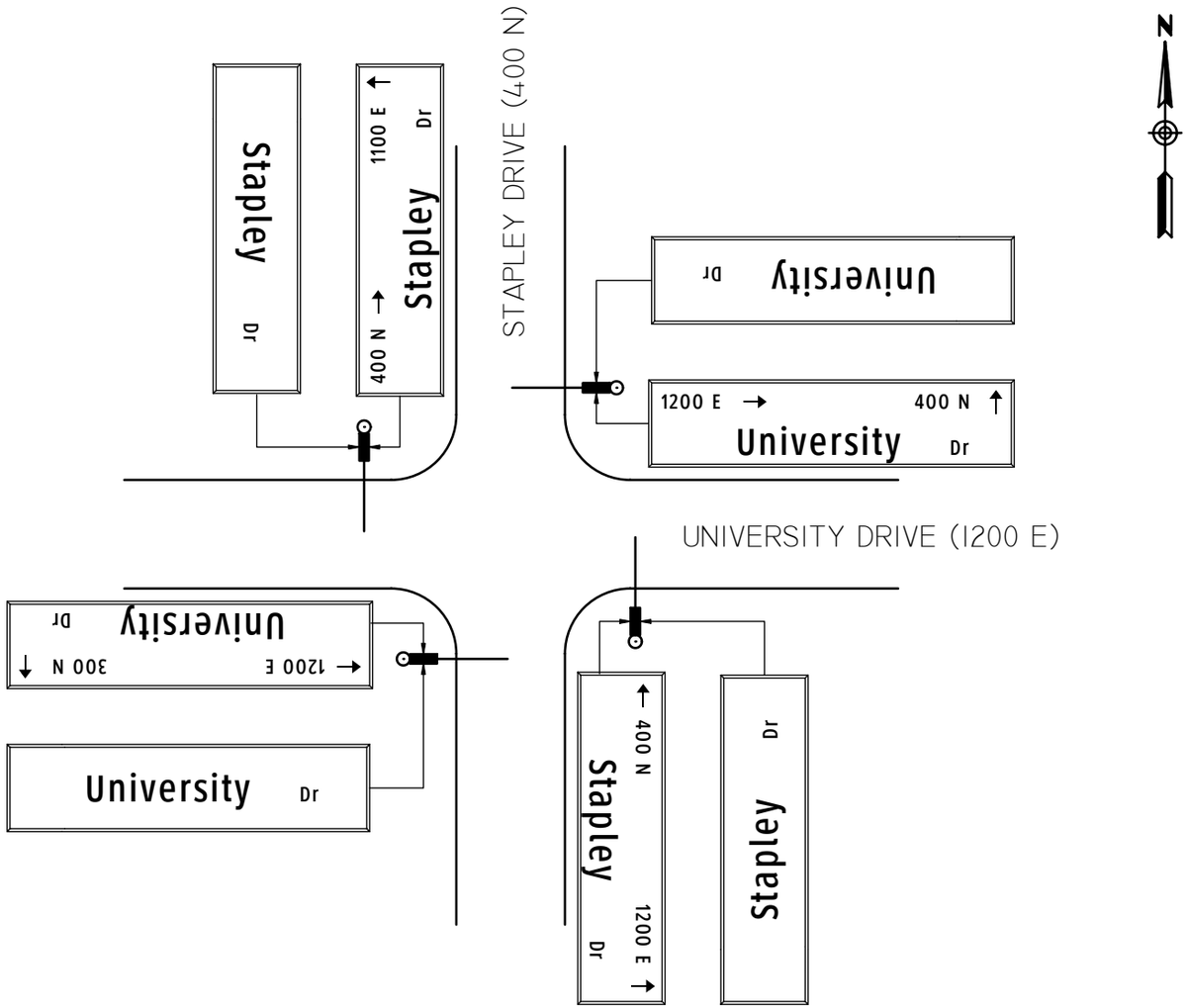

INTERNALLY ILLUMINATED STREET NAME SIGNS

NOTES

1. SEE COM DETAILS M-21.07 AND M-21.08 FOR SIGN LAYOUT INFORMATION.
2. SEE COM DETAILS M-95.07 THROUGH M-95.09 FOR SUPPORT STRUCTURE, SIGN, AND INSTALLATION DETAILS.

NOT TO SCALE

mesa·az

INTERNALLY ILLUMINATED STREET NAME SIGNS
ADDRESSING SCHEME

DETAIL NO.
M-21.06

REV. 01/31/14

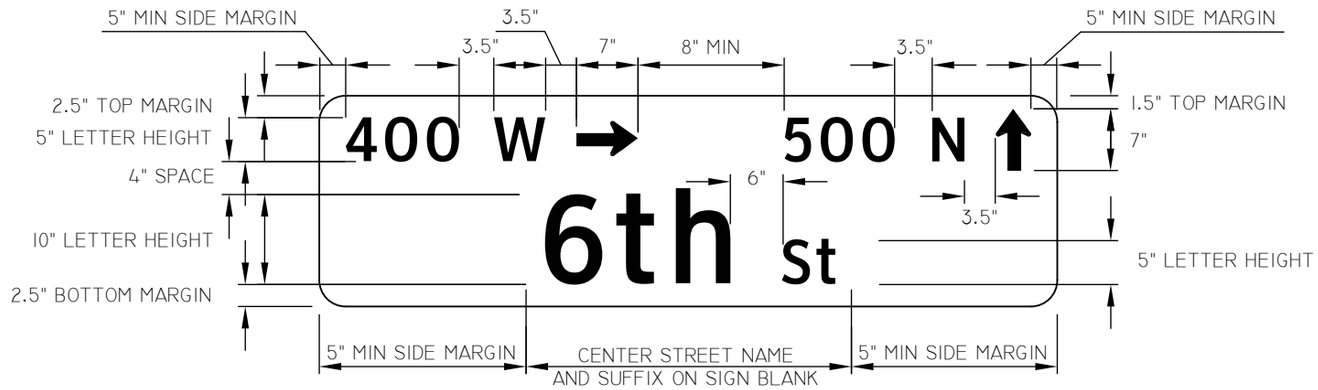

NOTES

1. SEE COM DETAILS M-21.05 AND M-21.06 FOR ADDRESSING SCHEMES.
2. SEE COM DETAIL M-95.07 FOR INSTALLATION DETAILS FOR INTERNALLY ILLUMINATED STREET NAME SIGNS (IISNS).
3. LETTERS, NUMBERS, AND ARROWS SHALL BE WHITE ON A GREEN BACKGROUND, FONT SHALL BE INITIAL UPPER- AND LOWER-CASE CLEARVIEW "3-W".
4. FOR IISNS WITH FRAMES, MARGINS SHALL BE INCREASED TO PROVIDE THE SAME VIEWABLE SIGN AREA AS A CONVENTIONAL METRO SIGN.
5. FOR STREET NAMES WITH DESCENDING STROKES, A MINIMUM (VIEWABLE) BOTTOM MARGIN OF 1" IS REQUIRED, MEASURED FROM THE DESCENDING LETTER TO THE BOTTOM EDGE OF THE SIGN BLANK.
6. STREET NAME SPELLINGS AND TYPES CAN BE OBTAINED FROM THE "STREET AREA DIRECTORY" AVAILABLE ON THE CITY OF MESA'S WEBSITE (WWW.MESAAZ.GOV).
7. ALL STREET NAME SIGNS ARE SUBJECT TO APPROVAL BY THE CITY OF MESA PRIOR TO INSTALLATION. CONTACT THE CITY OF MESA SIGN SHOP AT 480-644-3175 FOR ASSISTANCE AND APPROVAL OF SIGN LAYOUT.

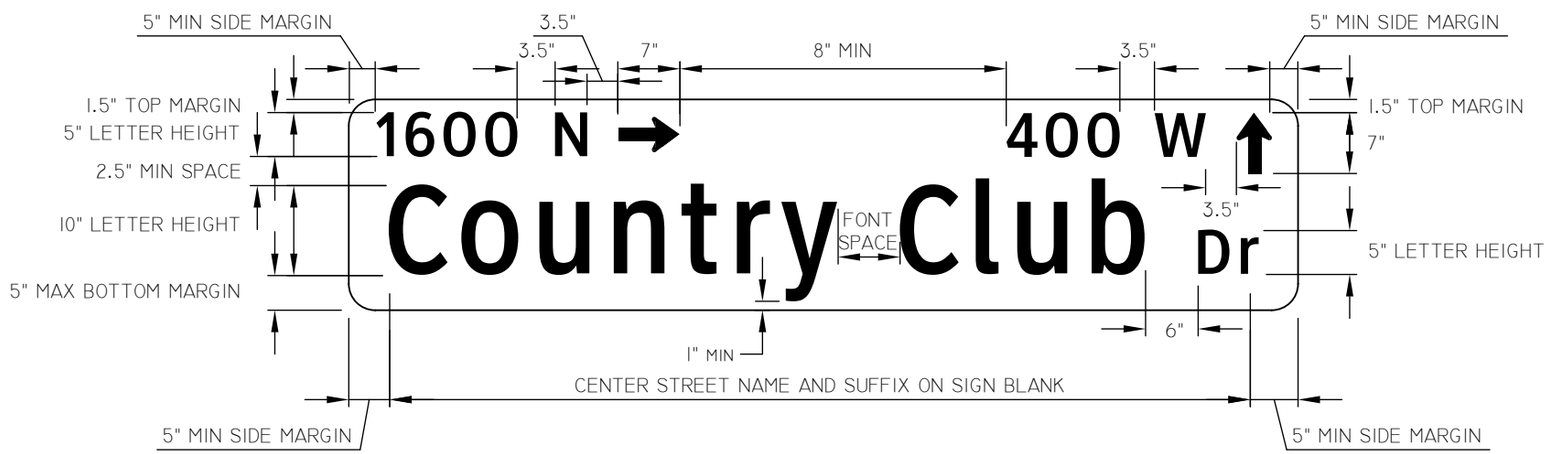

STANDARD SIGN LAYOUT

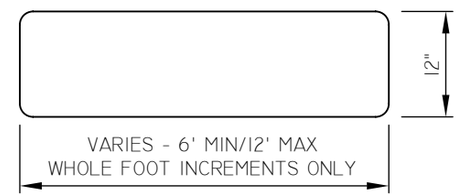

BLANK DIMENSIONS (METRO)
VIEWABLE DIMENSIONS (IISNS)

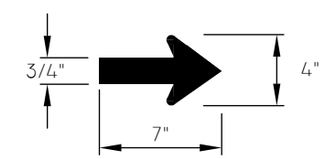

WHITE ARROW (TYPICAL)

NOT TO SCALE

CONVENTIONAL METRO AND INTERNALLY ILLUMINATED SIGNS
STANDARD LAYOUT

DETAIL NO.
M-21.07

REV. 01/31/14

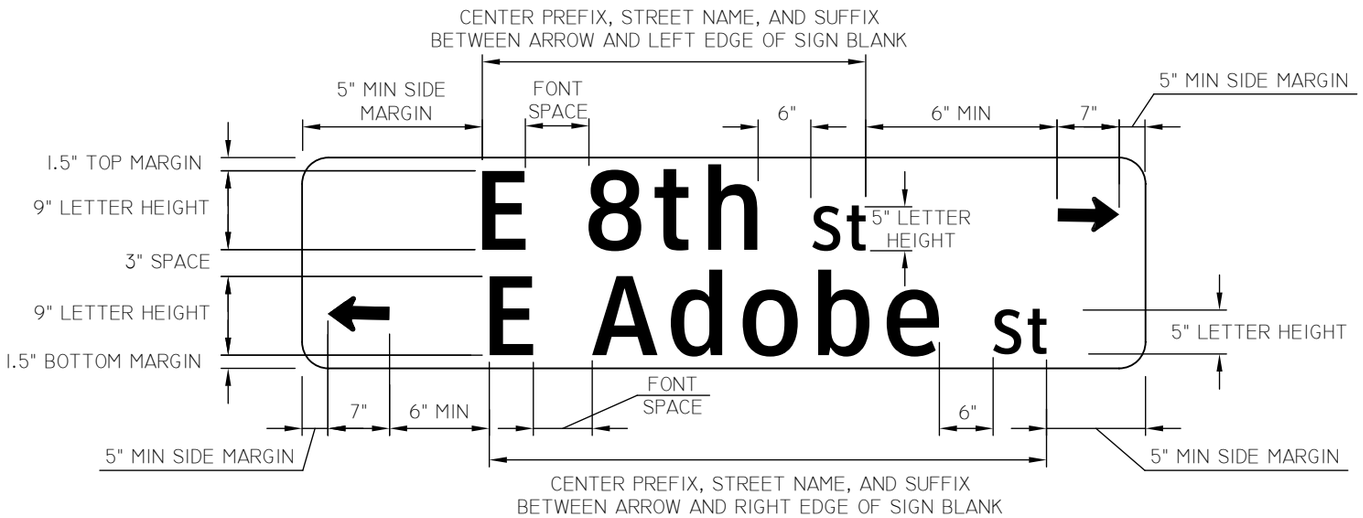

NOTES

1. SEE COM DETAILS M-21.05 AND M-21.06 FOR ADDRESSING SCHEMES.
2. SEE COM DETAIL M-95.07 FOR INSTALLATION DETAILS FOR INTERNALLY ILLUMINATED STREET NAME SIGNS (IISNS).
3. LETTERS, NUMBERS, AND ARROWS SHALL BE WHITE ON A GREEN BACKGROUND, FONT SHALL BE INITIAL UPPER- AND LOWER-CASE CLEARVIEW "3-W".
4. FOR IISNS WITH FRAMES, MARGINS SHALL BE INCREASED TO PROVIDE THE SAME VIEWABLE SIGN AREA AS A CONVENTIONAL METRO SIGN.
5. FOR STREET NAMES WITH ASCENDING OR DESCENDING STROKES, A MINIMUM (VIEWABLE) TOP OR BOTTOM MARGIN OF 1" IS REQUIRED, MEASURED FROM THE ASCENDING OR DESCENDING LETTER TO THE EDGE OF THE SIGN BLANK.
6. STREET NAME SPELLINGS AND TYPES CAN BE OBTAINED FROM THE "STREET AREA DIRECTORY" AVAILABLE ON THE CITY OF MESA'S WEBSITE (WWW.MESAAZ.GOV).
7. ALL STREET NAME SIGNS ARE SUBJECT TO APPROVAL BY THE CITY OF MESA PRIOR TO INSTALLATION. CONTACT THE CITY OF MESA SIGN SHOP AT 480-644-3175 FOR ASSISTANCE AND APPROVAL OF SIGN LAYOUT.

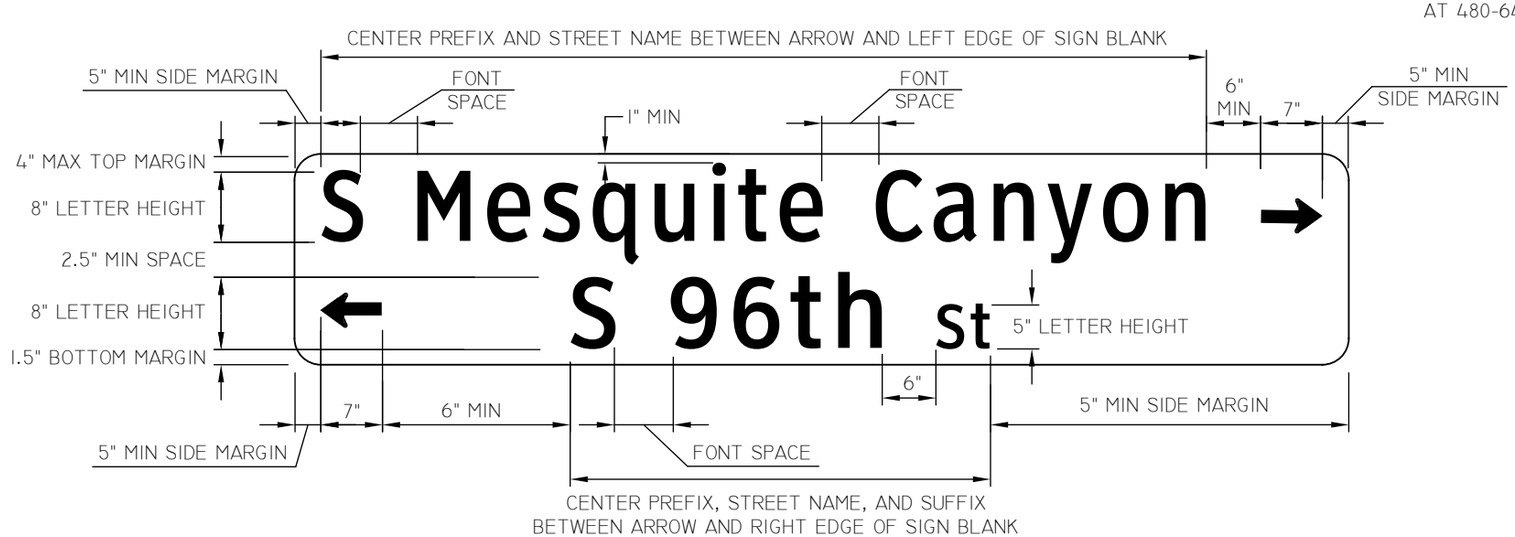

DUAL NAME SIGN LAYOUT

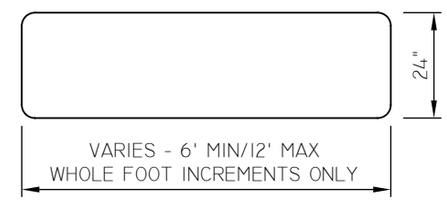

BLANK DIMENSIONS (METRO)
VIEWABLE DIMENSIONS (IISNS)

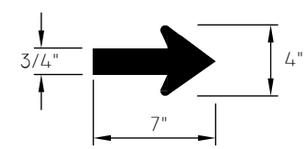

WHITE ARROW (TYPICAL)

NOT TO SCALE

CONVENTIONAL METRO AND INTERNALLY ILLUMINATED SIGNS
DUAL NAME LAYOUT

DETAIL NO. M-21.08

REV. 01/31/14

NOTES

1. USE STREET LIGHT POLES FOR SIGN MOUNTING WHERE POSSIBLE.
2. 200' MINIMUM DISTANCE BETWEEN SIGNS PREFERRED.
3. BUS STOP SIGNS TYPICALLY +/- 100' FROM ARTERIAL, 1/4 MILE OR 1/2 MILE STREET INTERSECTION. SEPARATE R8-3 IS NOT NEEDED WHERE NO PARKING SYMBOL IS ON BUS STOP SIGN.
4. DISTANCES ARE APPROXIMATE.
5. SIGN SIZES TO BE PER LATEST EDITION OF THE MUTCD INCLUDING ARIZONA SUPPLEMENT (IF APPLICABLE).
6. GO TO HTTP://WWW.MESAAZ.GOV/TRANSPORTATION/BIKEPEDMAPS.ASPX FOR BIKE ROUTE INFORMATION.
7. GO TO HTTP://WWW.MESAAZ.GOV/TRANSPORTATION/SPEEDLIMITS.ASPX FOR THE LATEST SPEED LIMIT MAP.

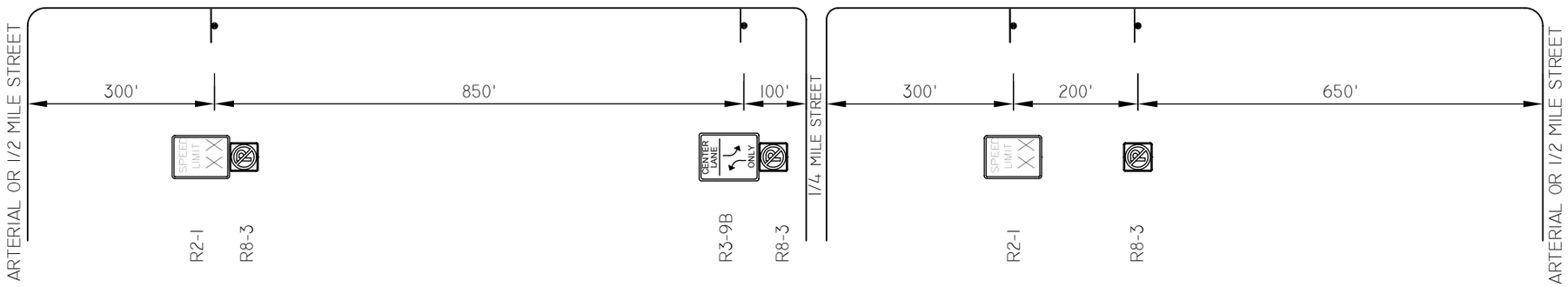

WITHOUT BIKE LANES

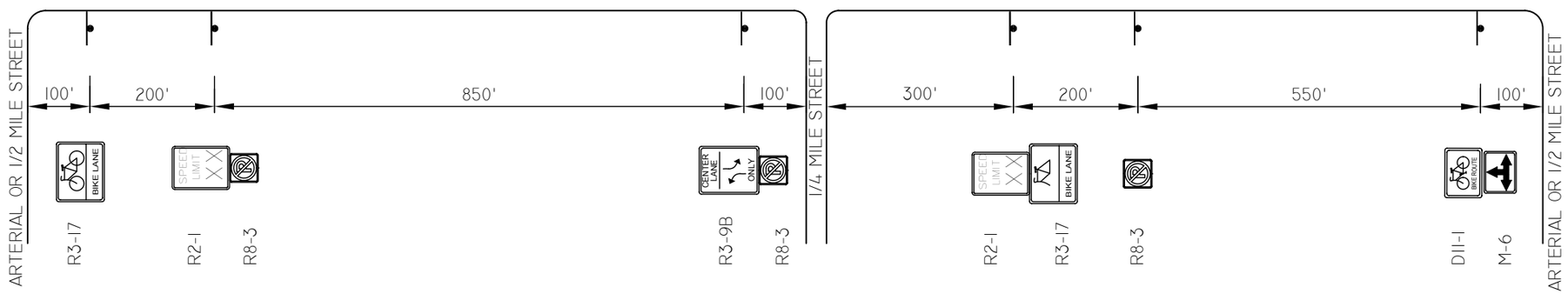

WITH BIKE LANES

NOT TO SCALE

mesa·az

TYPICAL SIGNING FOR ARTERIAL STREETS

DETAIL NO.
M-22.01

REV. 01/31/14

NOTES

1. THE MINIMUM MOUNTING HEIGHT SHALL BE 7 FEET.
2. IN CASES WHERE CURBS OR SIDEWALKS DO NOT EXIST, HEIGHT OF SIGNS SHALL BE MEASURED FROM ROAD SURFACE.
3. A MINIMUM OFFSET OF 1 FOOT MAY BE USED WHERE SIDEWALK WIDTH IS LIMITED OR WHERE EXISTING POLES ARE CLOSE TO THE CURB.
4. SIGN SIZES TO BE PER LATEST EDITION OF THE MUTCD INCLUDING ARIZONA SUPPLEMENT (IF APPLICABLE).

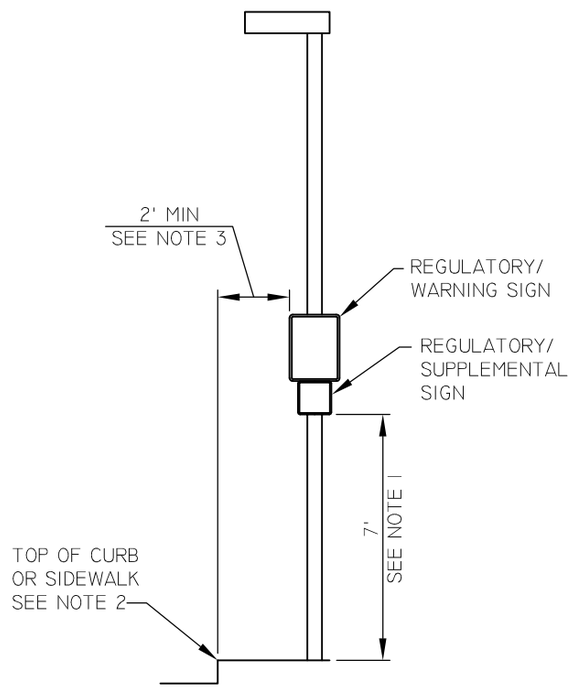

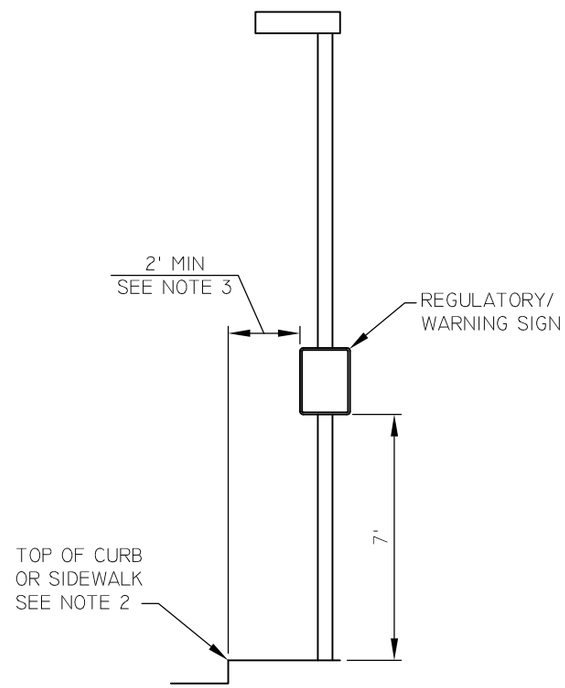

NOT TO SCALE

mesa·az

SIGN INSTALLATIONS ON STREET LIGHT POLES

DETAIL NO.
M-22.02

REV. 02/11/2015

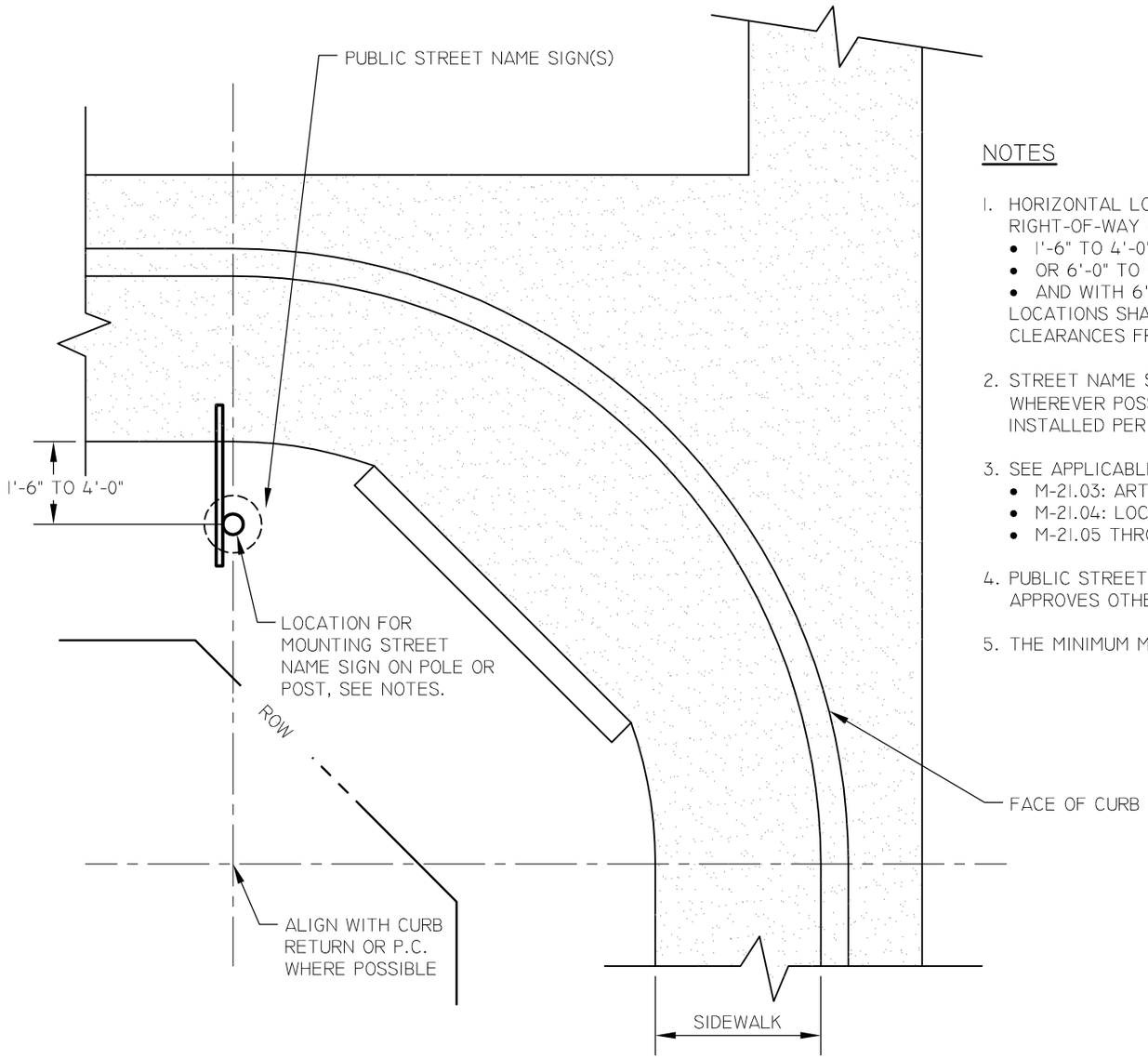

PUBLIC STREET NAME SIGN LOCATED BEHIND SIDEWALK

NOTES

1. HORIZONTAL LOCATIONS OF PUBLIC STREET NAME SIGN(S) SHALL TYPICALLY BE WITHIN A COM RIGHT-OF-WAY OR P.U.F.E. AT:
   - 1'-6" TO 4'-0" FROM BACK OF SIDEWALK
   - OR 6'-0" TO 8'-6" FROM EDGE OF PAVEMENT WHERE SIDEWALK DOES NOT EXIST
   - AND WITH 6'-0" MIN. CLEARANCE FROM A HYDRANT

   LOCATIONS SHALL BE VERIFIED BASED ON COM TRANSPORTATION REQUIREMENTS & REQUIRED CLEARANCES FROM UNDERGROUND UTILITIES.

2. STREET NAME SIGN(S) SHALL BE MOUNTED ON A TRAFFIC SIGNAL POST OR STREET LIGHT WHEREVER POSSIBLE. SIGN(S) SHALL OTHERWISE BE FASTENED TO A SQUARE TUBING POST INSTALLED PER COM DETAIL M-39.

3. SEE APPLICABLE DETAILS FOR STREET NAME SIGN INSTALLATION:
   - M-21.03: ARTERIAL/COLLECTOR TO LOCAL
   - M-21.04: LOCAL TO LOCAL
   - M-21.05 THROUGH M-21.08 FOR INSTALLATION ON TRAFFIC SIGNAL POST

4. PUBLIC STREET NAME SIGNS SHALL BE FURNISHED AND INSTALLED BY THE CITY UNLESS COM APPROVES OTHERWISE.

5. THE MINIMUM MOUNTING HEIGHT FOR STREET NAME SIGNS SHALL BE 9.5 FEET.

NOT TO SCALE

mesa·az

TYPICAL STREET NAME SIGN INSTALLATION LOCATION

DETAIL NO.
M-22.03

REV. 02/11/2015

NOTES

1. WHERE CURBS OR SIDEWALKS DO NOT EXIST, HEIGHT OF SIGNS SHALL BE MEASURED FROM THE ROAD SURFACE.
2. POSTS SHALL BE INSTALLED PER COM DETAIL M-39. A CLASS 'C' CONCRETE BASE MAY BE REQUIRED WHERE DETERMINED BY THE CITY.
3. A STANDARD 2-FOOT LATERAL OFFSET FROM EDGE OF SIGN TO EDGE OF ROAD SHALL BE USED UNLESS OTHERWISE NOTED. SEE COM DETAIL M-22.02 FOR LATERAL OFFSET DIMENSIONING.
4. A MINIMUM 1-FOOT LATERAL OFFSET FROM EDGE OF PAVEMENT OR FACE OF CURB MAY BE USED WHERE POLES ARE CLOSE TO EDGE OF ROAD OR CLEARANCE FROM SIDEWALK IS LIMITED.
5. SIGN SIZES TO BE PER THE LATEST EDITION OF THE MUTCD INCLUDING ARIZONA SUPPLEMENT (IF APPLICABLE).

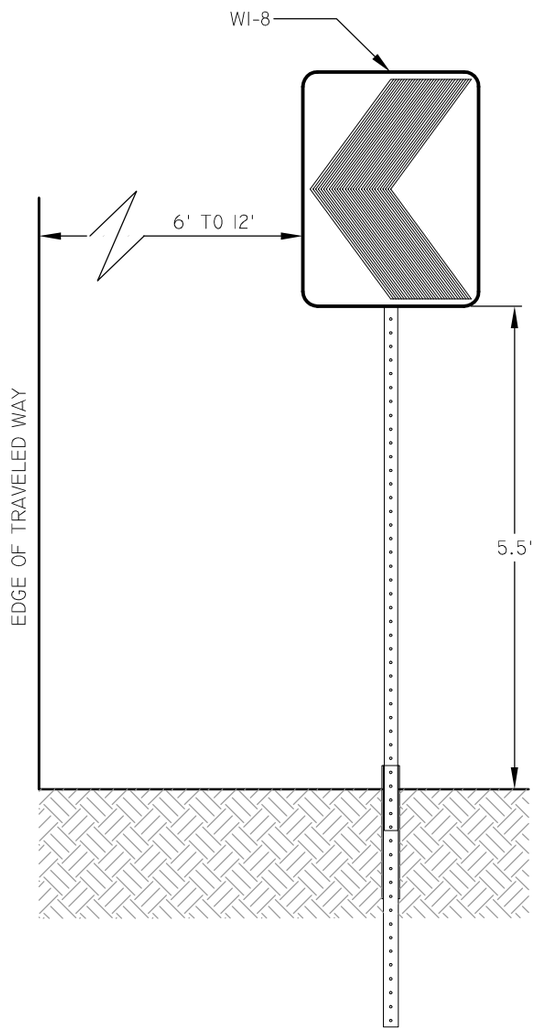

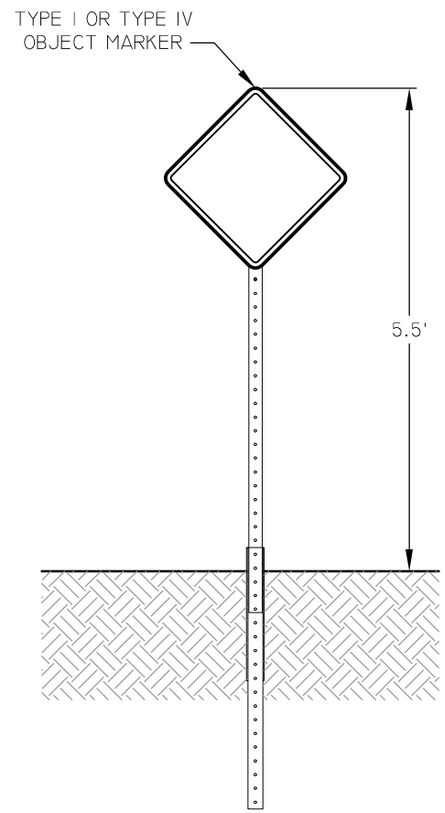

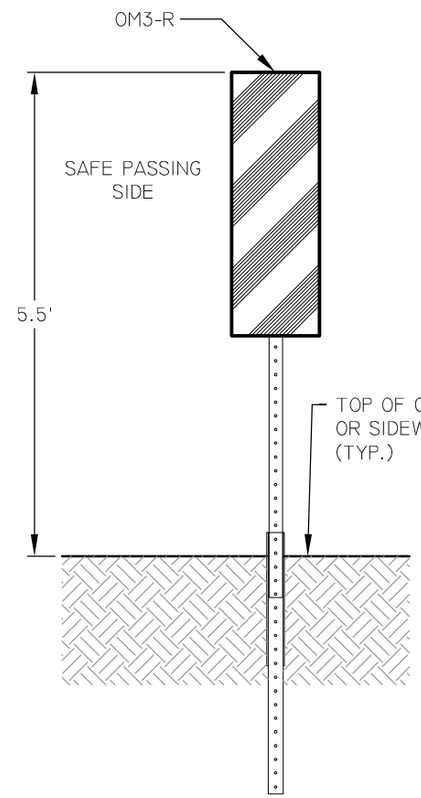

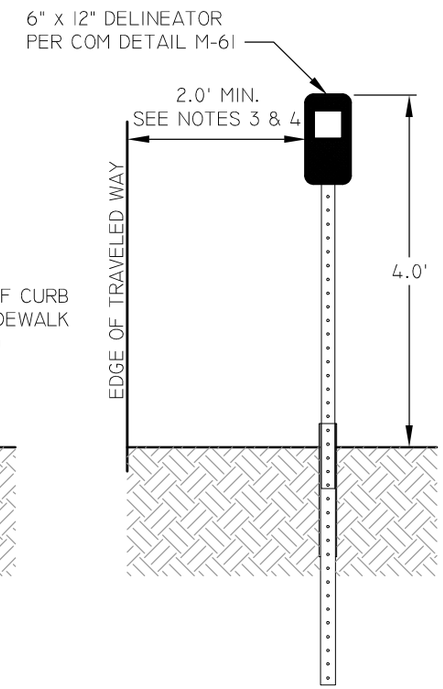

NOT TO SCALE

mesa·az

OBJECT AND END OF ROAD MARKERS, CHEVRON AND DELINEATOR INSTALLATION

DETAIL NO.
M-23.01

REV. 01/31/14

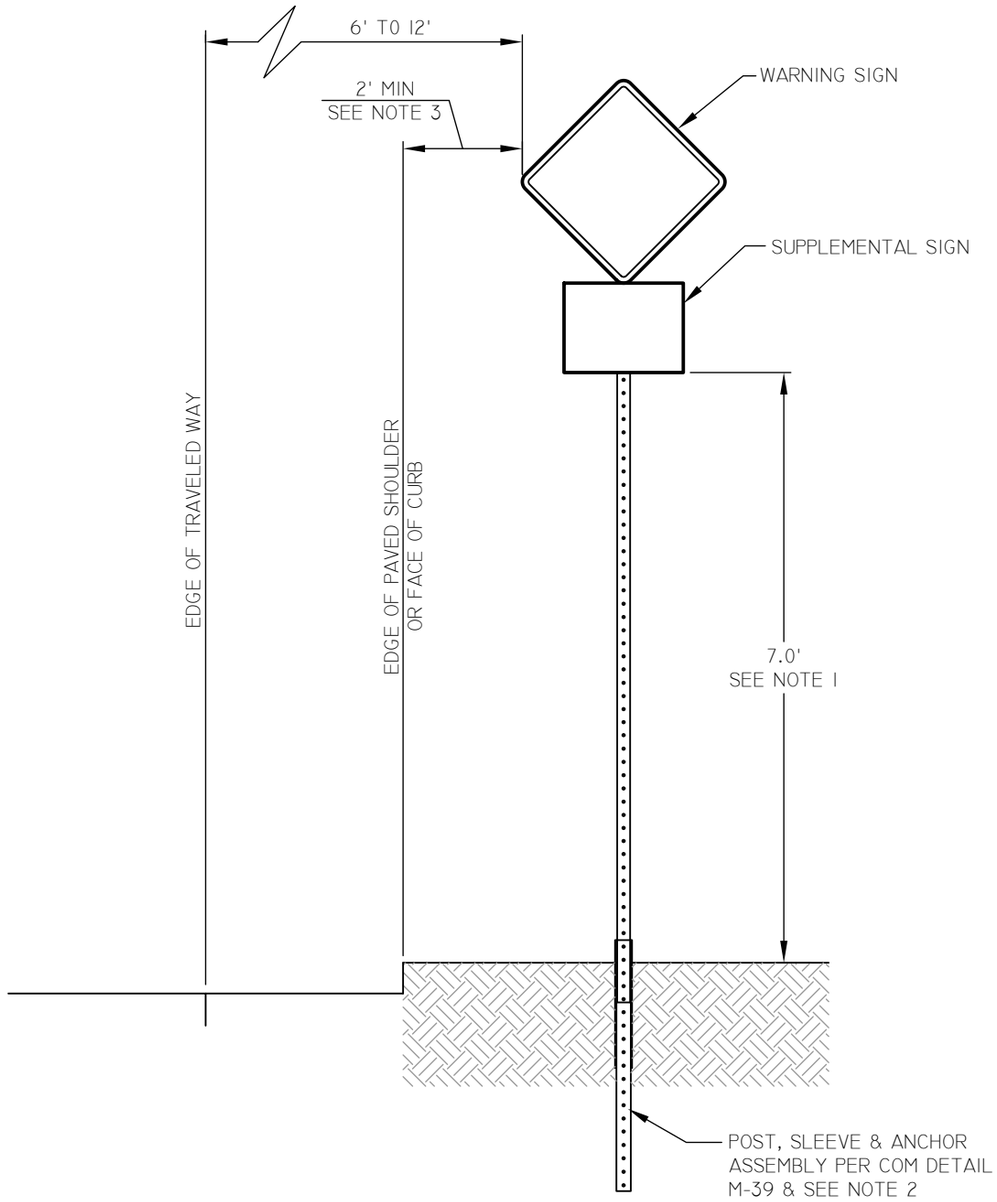

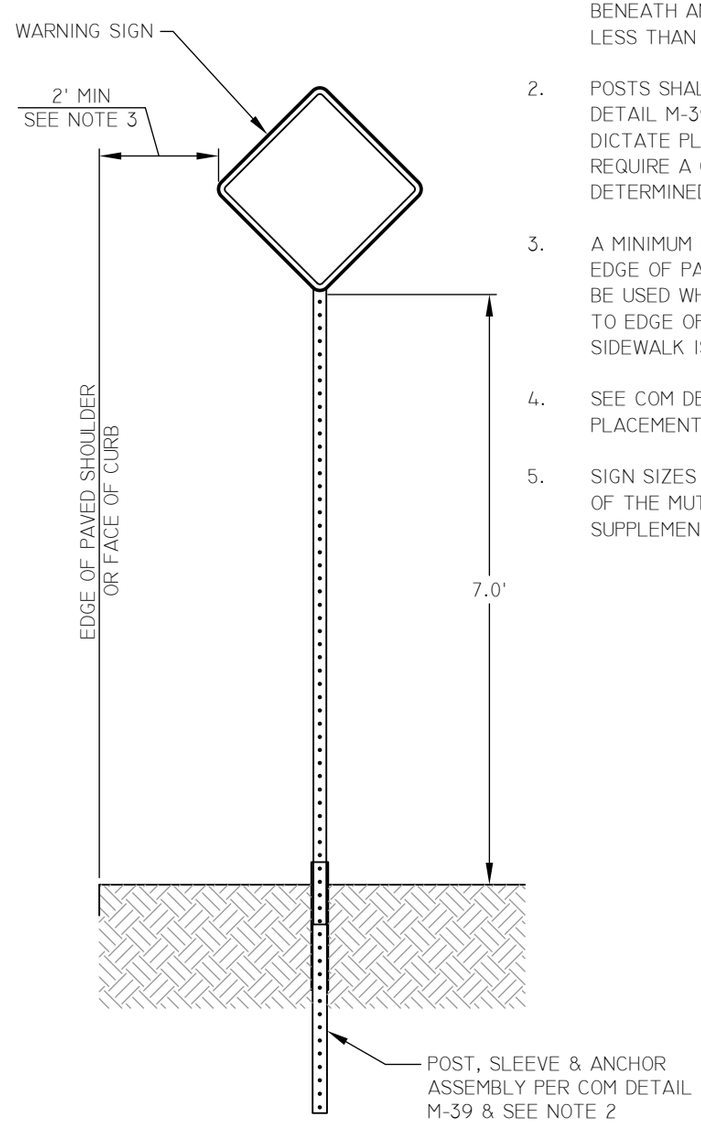

NOTES

1. HEIGHT OF SUPPLEMENTAL SIGN MOUNTED BENEATH ANOTHER SIGN SHALL NOT BE LESS THAN 7 FEET.
2. POSTS SHALL BE INSTALLED PER COM DETAIL M-39. SOME SOIL CONDITIONS MAY DICTATE PLACING THE POST DEEPER OR REQUIRE A CONCRETE BASE, AS DETERMINED BY THE CITY.
3. A MINIMUM 1-FOOT LATERAL OFFSET FROM EDGE OF PAVEMENT OR FACE OF CURB MAY BE USED WHERE WHERE POLES ARE CLOSE TO EDGE OF ROAD OR CLEARANCE FROM SIDEWALK IS LIMITED.
4. SEE COM DETAIL M-23.05 FOR DISTANCE PLACEMENT OF WARNING SIGNS.
5. SIGN SIZES TO BE PER THE LATEST EDITION OF THE MUTCD INCLUDING ARIZONA SUPPLEMENT (IF APPLICABLE).

NOT TO SCALE

mesa·az

STANDARD CLEARANCE FOR WARNING SIGNS

DETAIL NO.
M-23.02

REV. 01/31/14

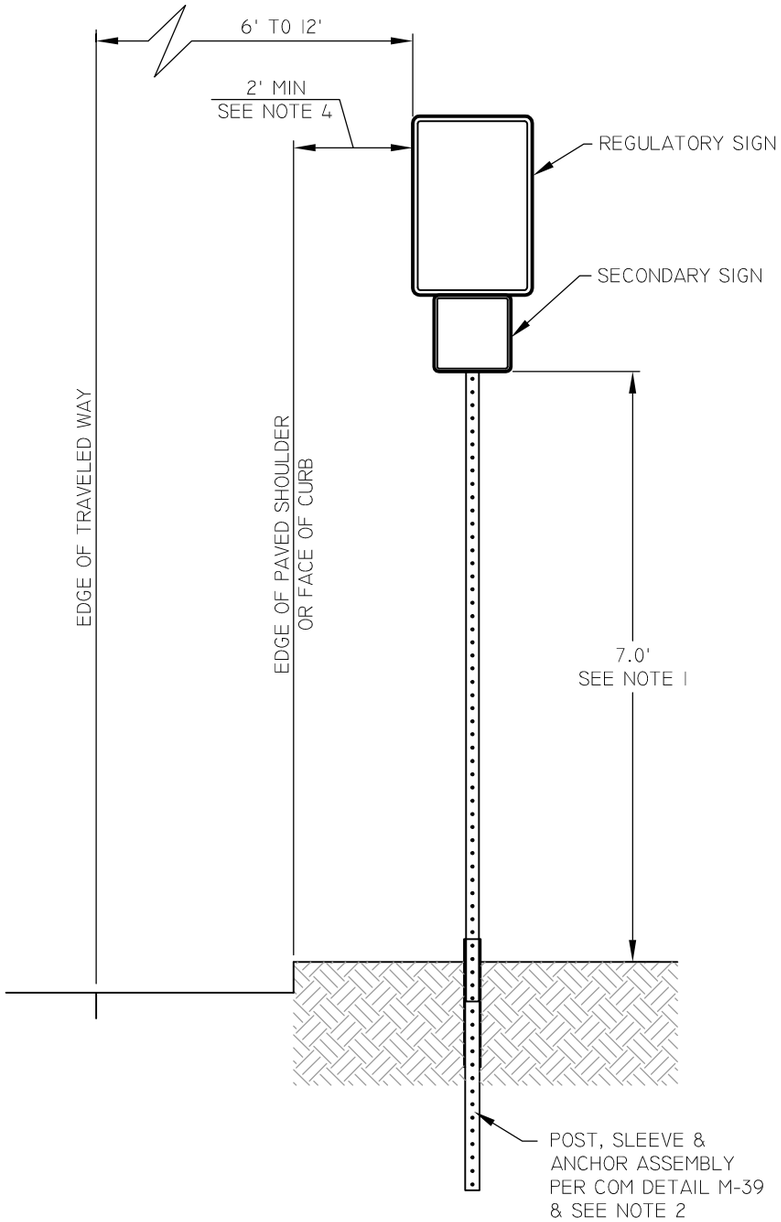

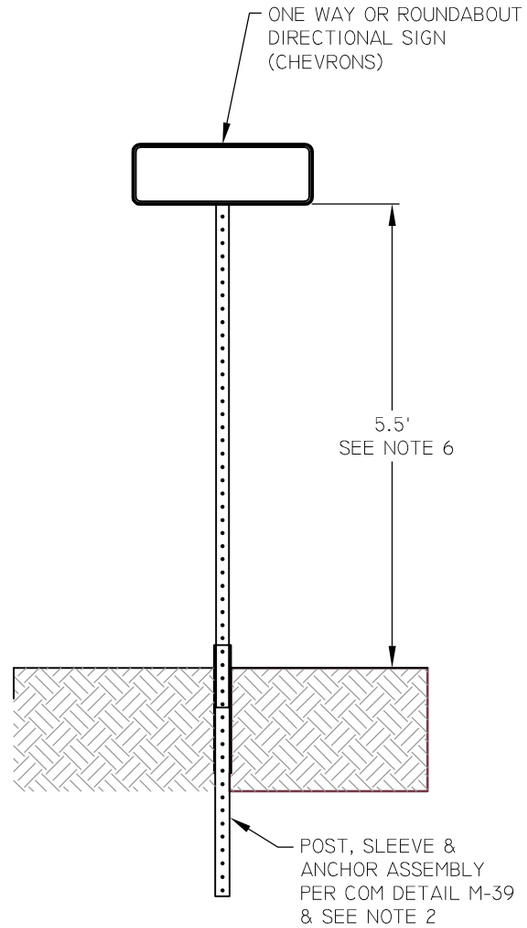

NOTES

1. HEIGHT OF SECONDARY SIGN MOUNTED BENEATH ANOTHER SIGN SHALL NOT BE LESS THAN 7-FEET.
2. POSTS SHALL BE INSTALLED PER COM DETAIL M-39. SOME SOIL CONDITIONS MAY DICTATE PLACING THE POST DEEPER OR REQUIRE A CONCRETE BASE, AS DETERMINED BY THE CITY.
3. SEE COM DETAIL M-22.01 FOR DISTANCE PLACEMENT OF SIGNS ON ARTERIAL STREETS.
4. A MINIMUM 1-FOOT LATERAL OFFSET FROM EDGE OF PAVEMENT OR FACE OF CURB MAY BE USED WHERE WHERE POLES ARE CLOSE TO EDGE OF ROAD OR CLEARANCE FROM SIDEWALK IS LIMITED.
5. SIGN SIZES TO BE PER THE LATEST EDITION OF THE MUTCD INCLUDING ARIZONA SUPPLEMENT (IF APPLICABLE).
6. MOUNTING HEIGHT SHALL BE 5.5' WHEN SIGN IS INSTALLED ON FAR SIDE OF AN APPROACH, SUCH AS AT A TEE INTERSECTION, UNLESS ADJACENT TO SIDEWALK. WHEN INSTALLED ADJACENT TO SIDEWALK FACILITIES, THE MOUNTING HEIGHT SHALL BE 7.0'.

NOT TO SCALE

mesa·az

VARIOUS SIGN INSTALLATIONS

DETAIL NO.
M-23.03

REV. 02/11/2015

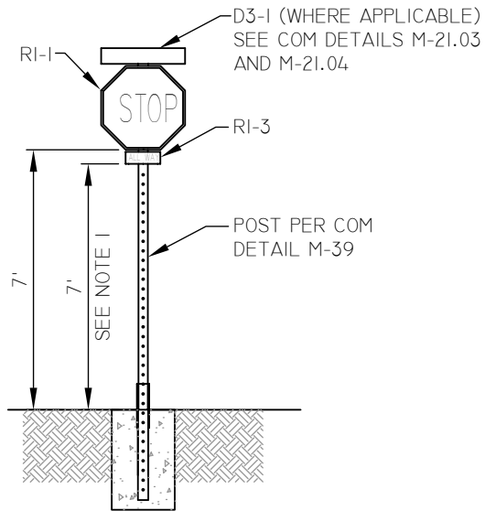

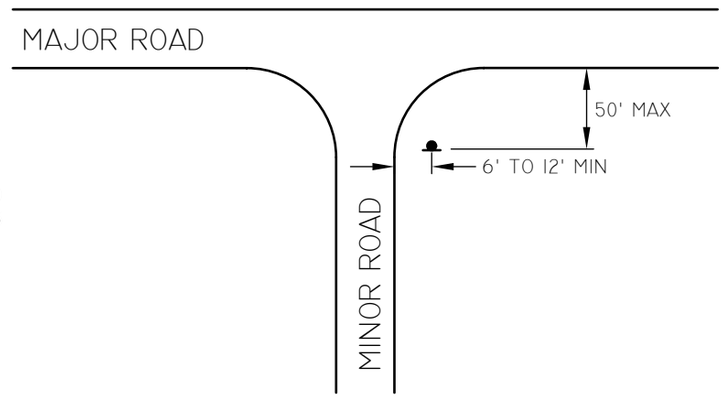

WIDE THROAT INTERSECTION

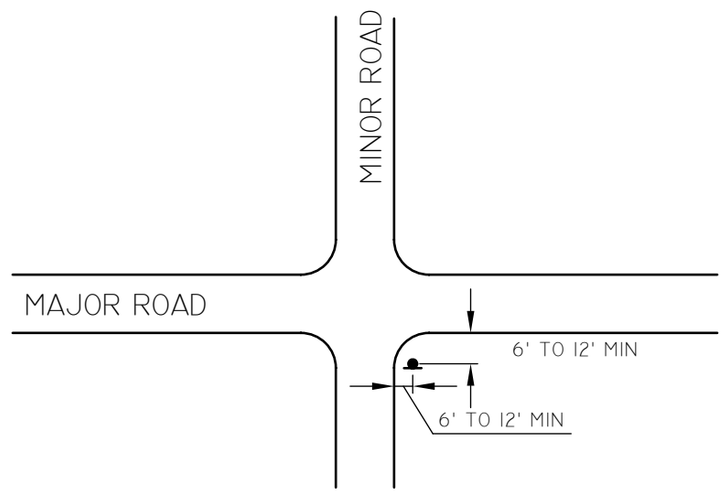

CROSSROAD INTERSECTION

NOTES

1. THE MINIMUM MOUNTING HEIGHT SHALL BE 7 FEET.
2. FOR SIGNS EXCEEDING 2000 SQUARE INCHES SEE COM DETAIL M-39.
3. LATERAL OFFSET IS A MINIMUM OF 6 FEET MEASURED FROM THE EDGE OF THE SHOULDER, OR 12 FEET MEASURED FROM THE EDGE OF TRAVELED WAY.
4. SIGN SIZES TO BE PER LATEST EDITION OF THE MUTCD INCLUDING ARIZONA SUPPLEMENT (IF APPLICABLE).

mesa·az

STANDARD CLEARANCES AND LOCATION FOR STOP SIGNS

DETAIL NO.
M-23.04

REV. 01/31/14

DESIGN SPEED	ADVANCE PLACEMENT DISTANCE						
	CONDITION A: SPEED REDUCTION AND LANE CHANGING IN HEAVY TRAFFIC	CONDITION B: DECELERATION TO THE LISTED ADVISORY SPEED (MPH) FOR THE CONDITION					
		0	10	20	30	40	50
20 MPH	175 FT	100 FT	N/A	—	—	—	—
25 MPH	250 FT	100 FT	N/A	N/A	—	—	—
30 MPH	325 FT	100 FT	N/A	N/A	—	—	—
35 MPH	400 FT	100 FT	N/A	N/A	N/A	—	—
40 MPH	475 FT	125 FT	100 FT	100 FT	N/A	—	—
45 MPH	550 FT	175 FT	125 FT	100 FT	100 FT	N/A	—
50 MPH	625 FT	250 FT	200 FT	175 FT	125 FT	100 FT	—
55 MPH	700 FT	325 FT	275 FT	225 FT	200 FT	125 FT	N/A
60 MPH	775 FT	400 FT	350 FT	325 FT	275 FT	200 FT	100 FT
65 MPH	850 FT	475 FT	450 FT	400 FT	350 FT	275 FT	200 FT

NOTES

1. SEE TABLE 2C-4 OF THE ARIZONA SUPPLEMENT TO THE 2009 MUTCD FOR MORE INFORMATION ON THE GUIDELINES FOR ADVANCE PLACEMENT OF WARNING SIGNS.
2. THE DESIRED WARNING SIGN PLACEMENT DISTANCE IS BASED ON THE DESIGN SPEED, WHICH IS THE POSTED SPEED LIMIT PLUS 5 MPH.
3. IF THESE DISTANCES ARE NOT MET IN THE FIELD, CONTACT THE TRAFFIC STUDIES GROUP AT 480-644-2160 FOR ASSISTANCE.

mesa·az

GUIDELINES FOR ADVANCE PLACEMENT OF WARNING SIGNS

DETAIL NO. M-23.05

REV. 02/04/13

NOTES

1. SEE COM DETAIL M-25 FOR ACCESSIBLE SIGN DETAILS.
2. ARS 28-882 RESTRICTS THE HEIGHT OF HANDICAP PARKING SIGNS TO BETWEEN 3 FT AND 6 FT ABOVE GRADE.
3. ARS 28-882 REQUIRES AN ACCESSIBLE SIGN FOR EACH PARKING SPACE.

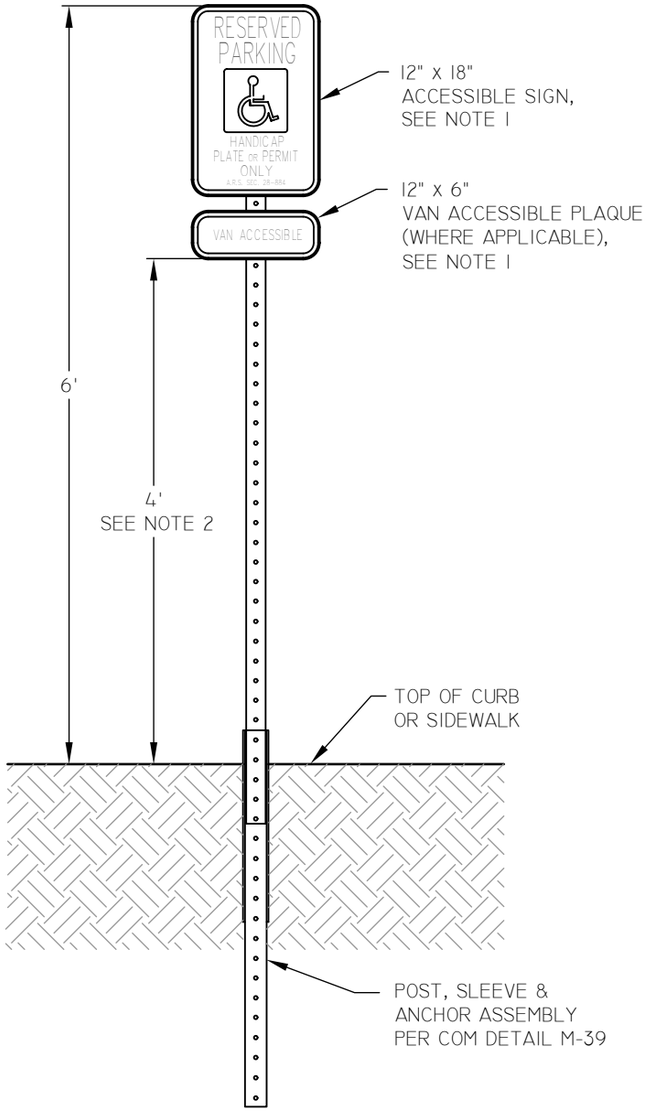

ACCESSIBLE SIGN HEIGHT AND INSTALLATION

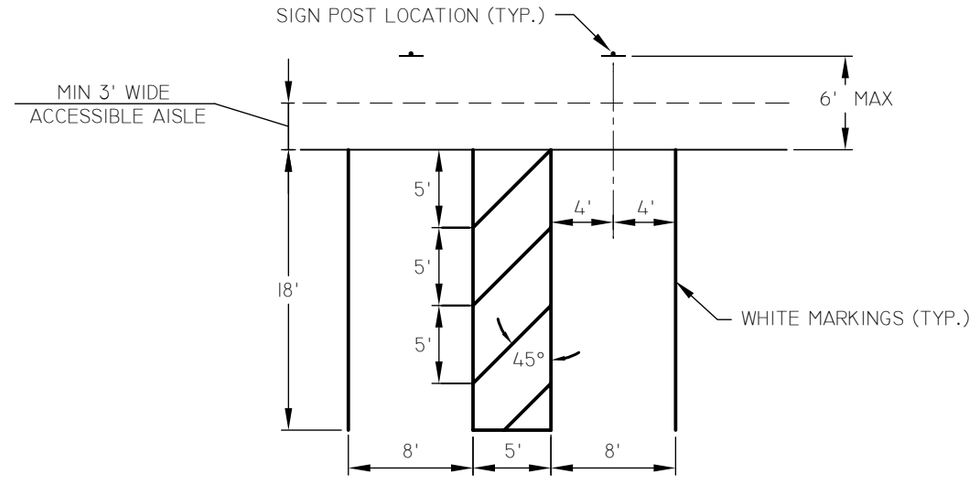

TYPICAL ACCESSIBLE STALL MARKINGS

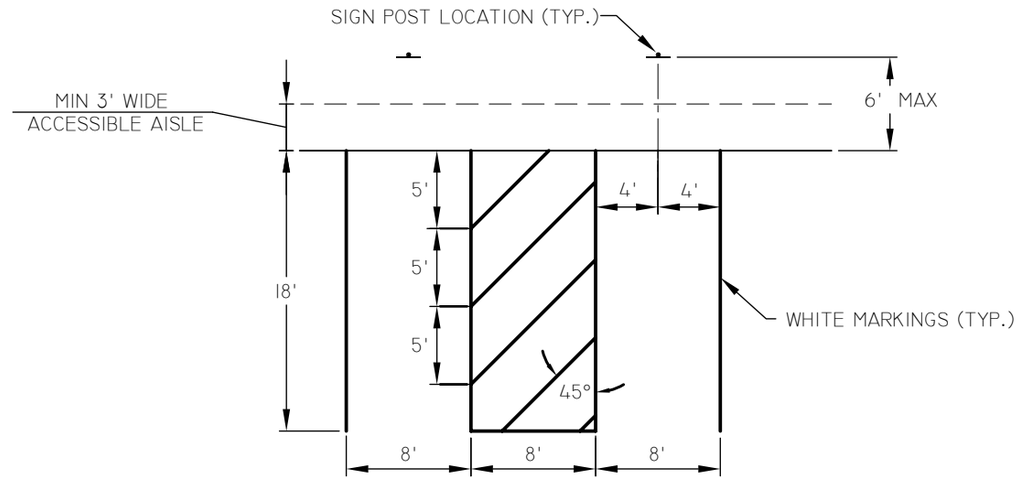

VAN ACCESSIBLE STALL MARKINGS

NOT TO SCALE

mesa·az

STANDARD HANDICAP PARKING SIGN AND MARKINGS

DETAIL NO.
M-23.06

REV. 01/31/14

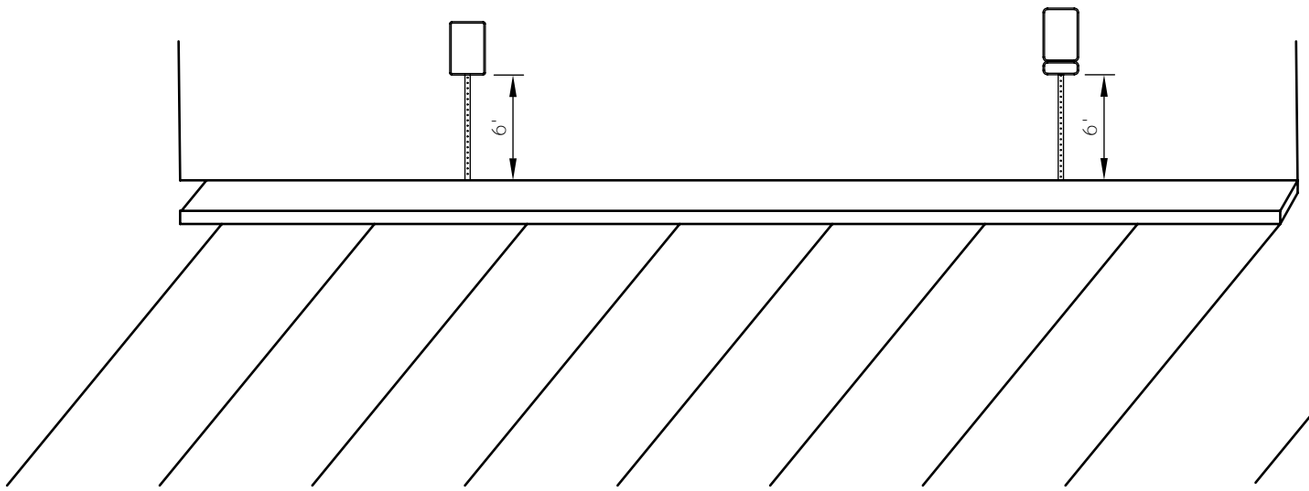

AREA SIGNING

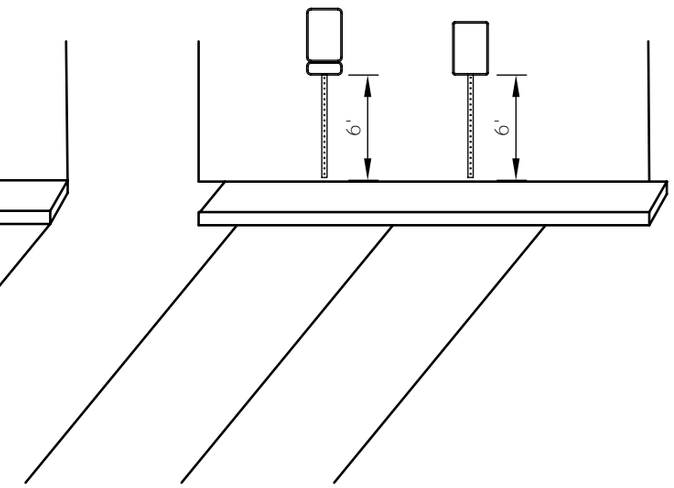

SINGLE STALL SIGNING

NOTES

1. EXCEPT FOR HANDICAP PARKING SIGNS, ALL SIGNS SHALL BE MOUNTED AT A HEIGHT OF 6 FEET AS MEASURED FROM THE BOTTOM OF THE SIGN.
2. IN CASES WHERE CURBS OR SIDEWALKS DO NOT EXIST, HEIGHT OF SIGNS SHALL BE MEASURED FROM ROAD SURFACE.
3. IF CONDITIONS WARRANT A LOWER SIGN HEIGHT, THE SIGN SHOULD NOT BE LOWER THAN 4 FEET MEASURED FROM THE BOTTOM OF THE SIGN.
4. ARS 28-882 RESTRICTS THE HEIGHT OF HANDICAP PARKING SIGNS TO BETWEEN 3 FT. AND 6 FT. ABOVE GRADE. SEE COM DETAIL M-23.06 FOR MOUNTING HEIGHT DETAILS FOR HANDICAP PARKING SIGNS.

NOT TO SCALE

mesa·az

SIGN HEIGHTS IN PARKING LOTS

DETAIL NO.
M-23.07

REV. 01/31/14

NOTES

1. CONTRACTOR SHALL PROVIDE DOUBLE-FACED "BUSINESS NAME" SIGNS FOR ALL BUSINESSES IMPACTED BY CONSTRUCTION. USE OF THESE SIGNS SHALL BE TEMPORARY AND LIMITED TO CONSTRUCTION.

2. "BUSINESS NAME" MAY BE A SHOPPING CENTER OR PLAZA NAME. COORDINATE NAME ON SIGN WITH CITY PUBLIC RELATIONS REPRESENTATIVE AND BUSINESS OWNER.

3. SIGN CRITERIA:.

   A. SIGN SHALL BE DOUBLE-FACED WITH BOTH ARROWS POINTING THE SAME DIRECTION.

   B. LETTERING SHALL BE 5" HIGH, SERIES "C", HIGHWAY GOTHIC.

   C. LETTERING, 17" ARROW AND 1/2" BORDER SHALL BE WHITE WITH A BLUE BACKGROUND, REFLECTIVE ENGINEERING GRADE SHEETING.

   D. SIGN SHALL BE MOUNTED ON TEMPORARY/MOVEABLE CONSTRUCTION SIGN BASE & POST SO THAT THE TOP OF THE SIGN WILL BE 5 1/2 FEET FROM THE BOTTOM OF THE STAND.

4. LOCATION OF THE SIGN SHALL BE COORDINATED BY CONTRACTOR AND CITY PUBLIC RELATIONS REPRESENTATIVE.

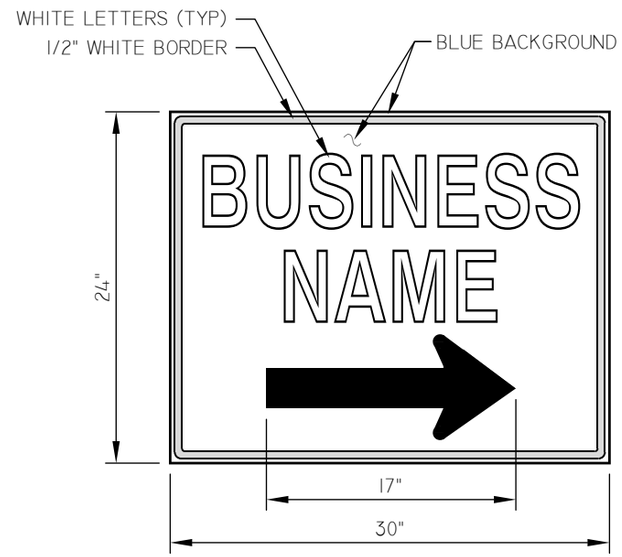

mesa·az

BUSINESS NAME SIGN

DETAIL NO.
M-24.01

REV. 01/31/14

NOTES

1. CONTRACTOR SHALL PROVIDE DOUBLE-FACED "BUSINESS NAME" SIGNS FOR ALL BUSINESSES IMPACTED BY CONSTRUCTION. USE OF THESE SIGNS SHALL BE TEMPORARY AND LIMITED TO CONSTRUCTION.

2. "BUSINESS NAME" MAY BE A SHOPPING CENTER OR PLAZA NAME. COORDINATE NAME ON SIGN WITH CITY PUBLIC RELATIONS REPRESENTATIVE AND BUSINESS OWNER.

3. SIGN CRITERIA:.

   A. SIGN SHALL BE DOUBLE-FACED WITH BOTH ARROWS POINTING SAME DIRECTION.

   B. LETTERING SHALL BE 5" HIGH, SERIES "C", HIGHWAY GOTHIC FOR BUSINESS NAMES AND 3" HIGH FOR "BUSINESS ACCESS" TEXT.

   C. LETTERING, 24" ARROW, AND 1" BORDER SHALL BE WHITE WITH A BLUE BACKGROUND, REFLECTIVE ENGINEERING GRADE SHEETING.

   D. SIGN SHALL BE MOUNTED ON A TEMPORARY/MOVABLE CONSTRUCTION SIGN BASE AND POST SO THAT THE TOP OF THE SIGN WILL BE 5 1/2 FEET FROM THE BOTTOM OF THE STAND. (SERIES 60000 BIG BUSTER SIGN STAND).

4. LOCATION OF THE SIGN SHALL BE COORDINATED BY CONTRACTOR AND CITY PUBLIC RELATIONS REPRESENTATIVE.

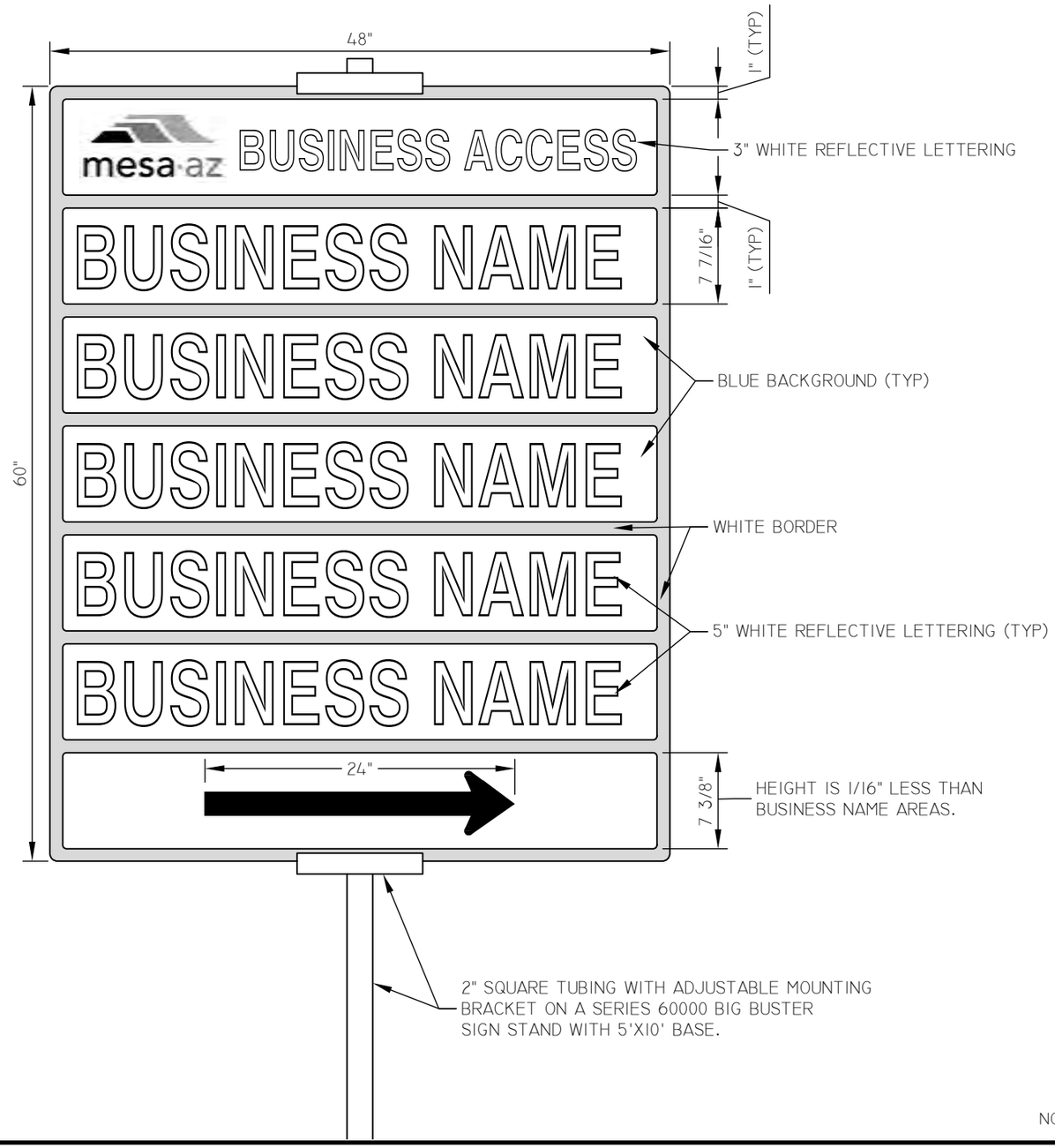

NOT TO SCALE

mesa·az

COMBINED BUSINESS NAME SIGNS

DETAIL NO.
M-24.02

REV. 01/31/14

NOTES

1. CONTRACTOR SHALL FURNISH AND INSTALL PROJECT NOTIFICATION SIGN WHEN PROJECT DURATION IS ONE (1) WEEK OR LONGER.
2. ALL WORK IN CITY RIGHT-OF-WAY OR EASEMENTS REQUIRE NOTIFICATION SIGNS TO BE PLACED ADJACENT TO CONSTRUCTION SITES THREE DAYS BEFORE COMMENCEMENT OF WORK.
3. ALL SIGNS MUST CONTAIN THE FOLLOWING INFORMATION; COMPANY NAME, OWNER/DEVELOPER , GENERAL DESCRIPTION OF WORK, COMPLETION DATE, AND A CONTACT PHONE NUMBER IN WHICH CALLS WILL BE RETURNED WITHIN TWENTY-FOUR (24) HOURS.
4. A MINIMUM 4'X 6' SIZE SIGN LARGE ENOUGH TO CONTAIN INFORMATION IS REQUIRED.
5. A SIGN MUST BE VISIBLE BY TRAFFIC FROM EACH DIRECTION.
6. THIS DETAIL IS FOR PRIVATE DEVELOPMENT AND NON-CITY UTILITIES. CITY PROJECTS WILL FOLLOW PROJECT SPECIFIC PROVISIONS.
7. FOR HORIZONTAL PROJECTS, THE PROJECT IDENTIFICATION SIGN SHALL BE PLACED AT BOTH ENDS OF THE PROJECT, UNLESS OTHERWISE DIRECTED BY THE CITY INSPECTOR OR TRAFFIC BARRICADING COORDINATOR.
8. FOR VERTICAL PROJECTS, ONE PROJECT IDENTIFICATION SIGN SHALL BE PLACED AT THE MAIN CONSTRUCTION ENTRANCE TO THE SITE, UNLESS OTHERWISE DIRECTED BY THE CITY INSPECTOR OR TRAFFIC BARRICADING COORDINATOR.
9. CONTRACTOR SHALL OBTAIN CITY INSPECTOR OR TRAFFIC BARRICADING COORDINATOR APPROVAL FOR THE PROPOSED LOCATION(S) OF THE SIGNS PRIOR TO INSTALLING THEM.
10. IF PROJECT SCHEDULE EXTENDS BEYOND CALENDAR YEAR END, SHOW DATE BY MONTH AND YEAR.
11. SIGN MUST BE REMOVED THREE DAYS AFTER FINAL INSPECTION.

NOT TO SCALE

PROJECT NOTIFICATION SIGN
FOR DEVELOPMENT & NON-CITY UTILITIES

DETAIL NO.
M-24.03

REV. 01/31/2014

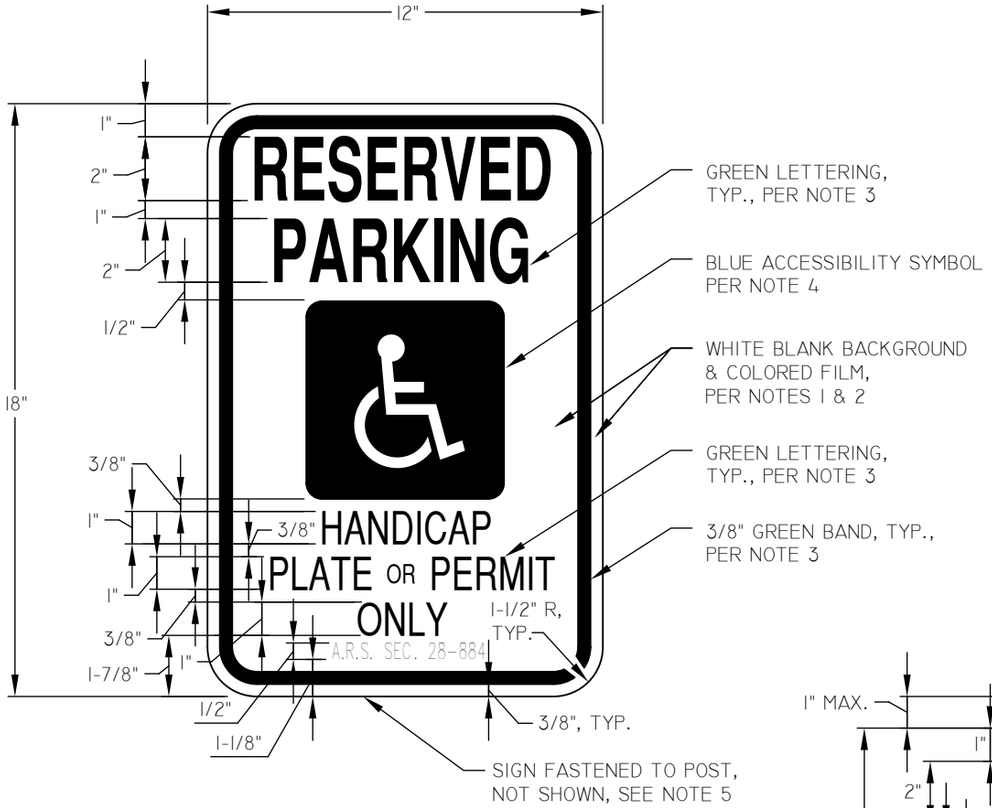

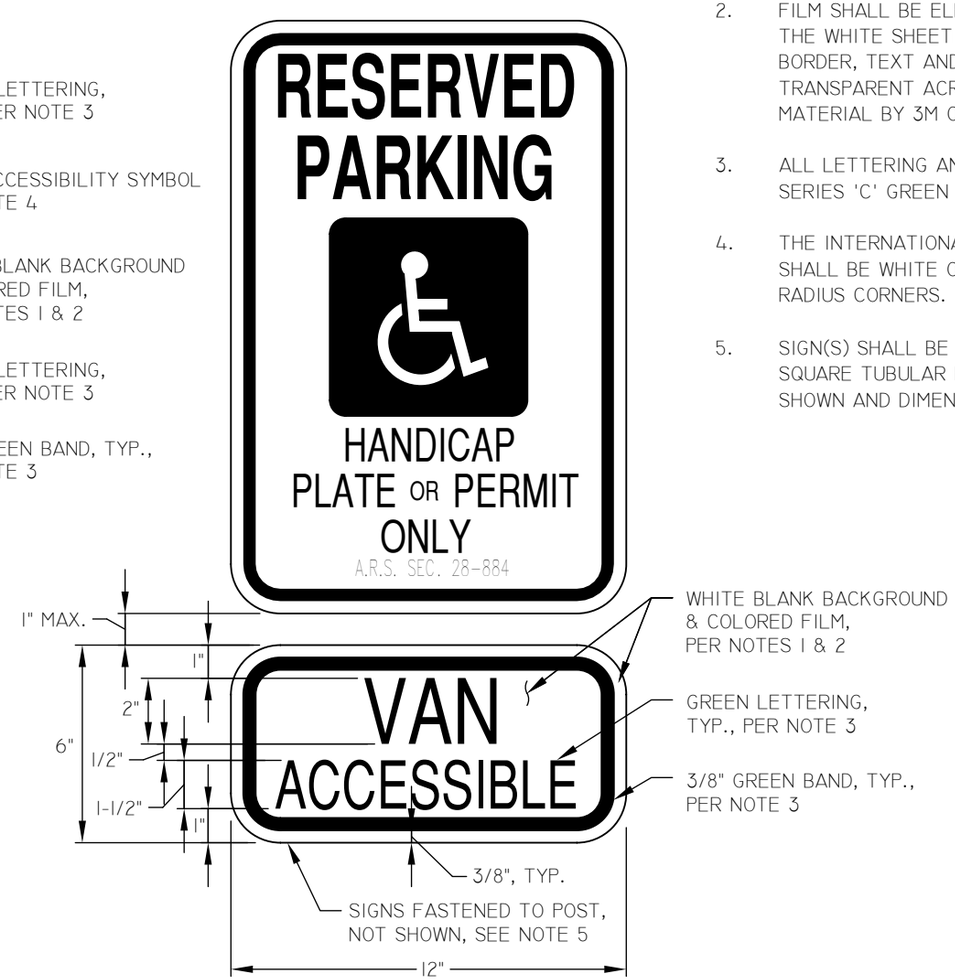

NOTES

1. SIGN BLANK MATERIAL SHALL BE WHITE PRESSURE SENSITIVE ASTM TYPE IV WIDE ANGLE PRISMATIC REFLECTIVE SHEETING OR APPROVED EQUAL.
2. FILM SHALL BE ELECTRO-CUT AND APPLIED OVER THE WHITE SHEETING TO CREATE THE COLORED BORDER, TEXT AND LEGEND. THE FILM SHALL BE TRANSPARENT ACRYLIC, PRESSURE SENSITIVE MATERIAL BY 3M OR APPROVED EQUAL.
3. ALL LETTERING AND BORDER BANDS SHALL BE A SERIES 'C' GREEN COLOR.
4. THE INTERNATIONAL SYMBOL OF ACCESSIBILITY SHALL BE WHITE ON A 6" X 6" BLUE FIELD WITH 1/2" RADIUS CORNERS.
5. SIGN(S) SHALL BE LOCATED AND FASTENED ON A SQUARE TUBULAR POST, PER COM DETAIL M-39, AS SHOWN AND DIMENSIONED ON COM DETAIL M-23.06.

NOT TO SCALE

mesa·az

ACCESSIBLE & VAN ACCESSIBLE PARKING SIGNS

DETAIL NO.
M-25

REV. 01/31/14

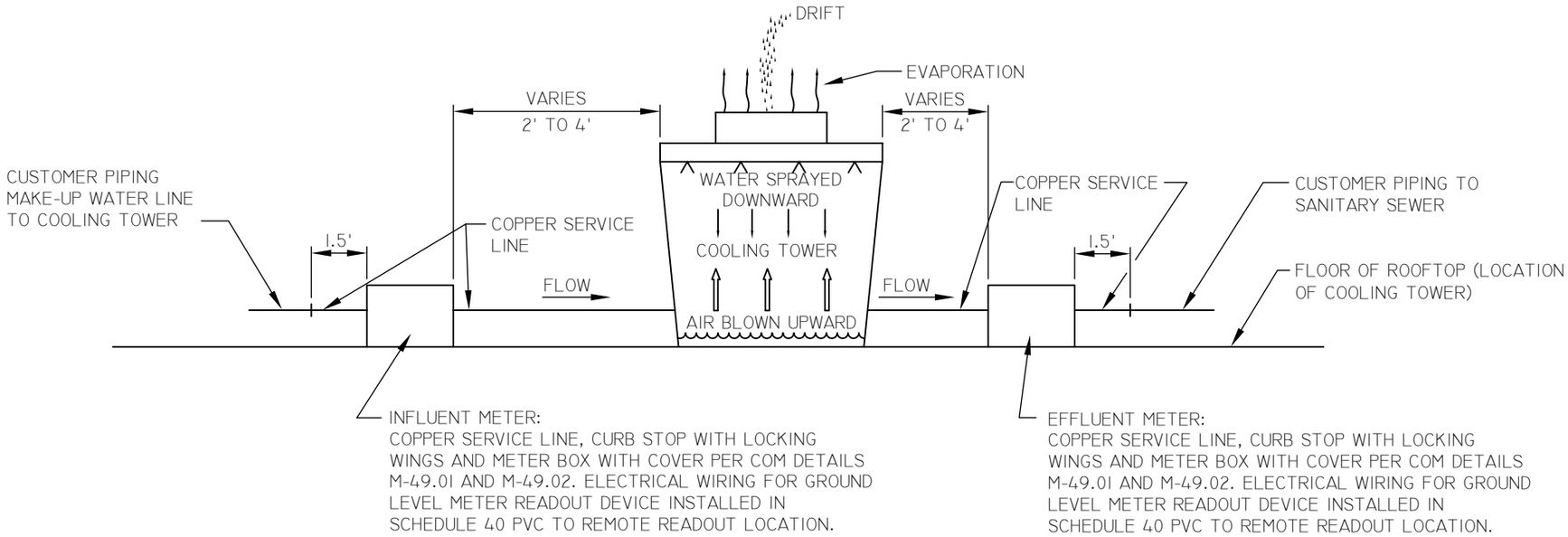

METER PLACEMENT AT COOLING TOWER

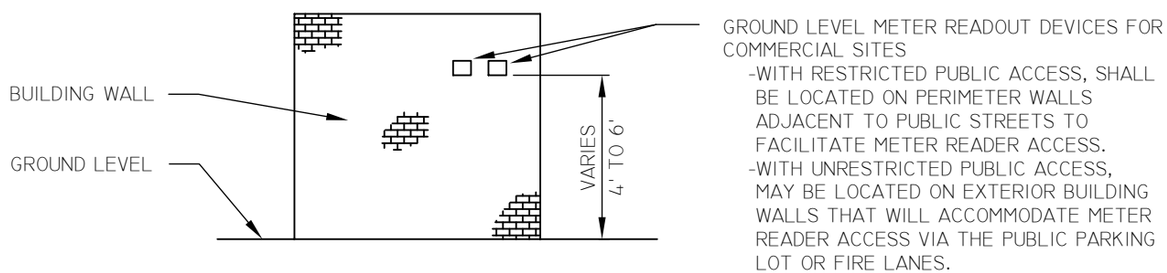

GROUND LEVEL METER READOUT DEVICE PLACEMENT

NOTE

BUILDING SAFETY DIVISION PLUMBING AND ELECTRICAL PERMITS REQUIRED FOR INSTALLATION

NOT TO SCALE

mesa·az

SUBTRACTIVE METER

DETAIL NO.
M-26

REV. 02/19/2015

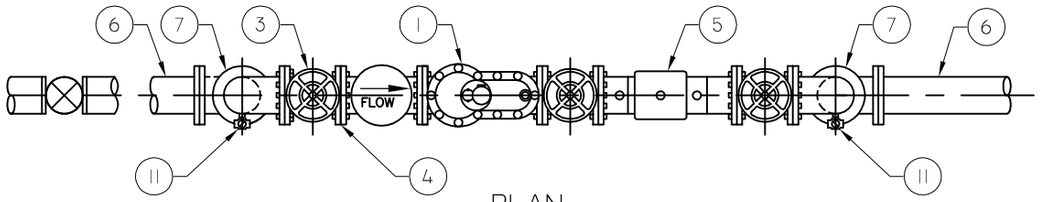

PLAN

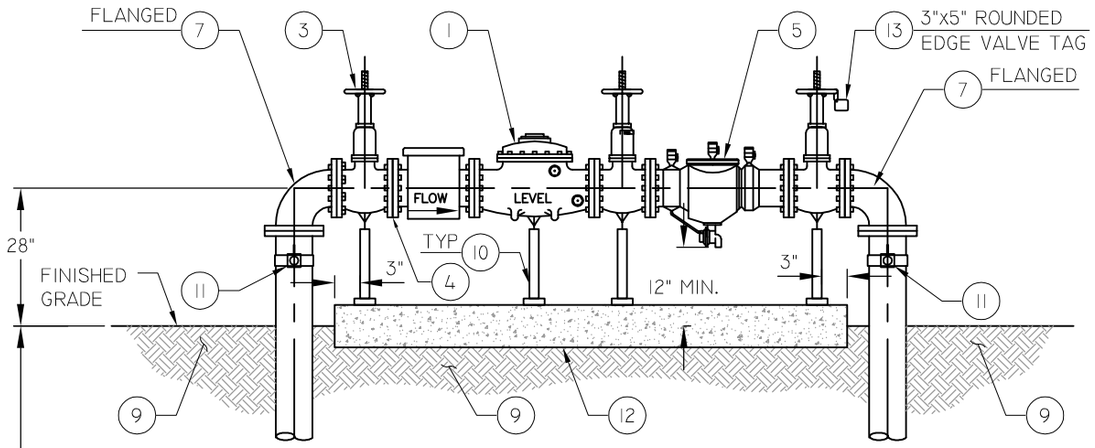

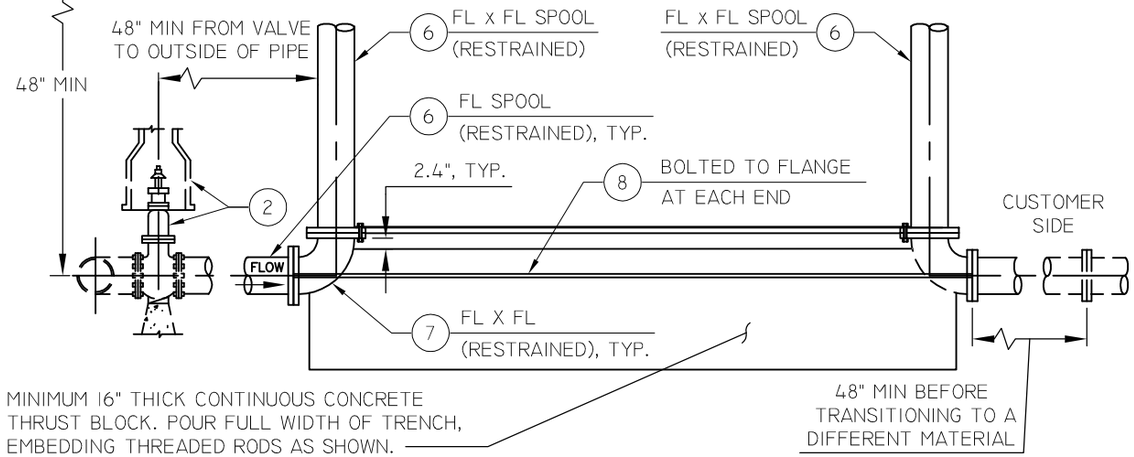

SECTION

METER ASSEMBLY KEY NOTES

1. SINGLE METER OR COMPOUND (TWO METERS MANIFOLDED) ASSEMBLY PER TABLE BELOW. ALL FITTINGS ABOVE GROUND SHALL BE FLANGED FITTINGS. ALL FLANGE BOLTS, NUTS AND STUDS IN ALL ABOVE GROUND FLANGES SHALL BE 316 STAINLESS STEEL AND LUBRICATED WITH FOOD GRADE ANTI-SEIZE COMPOUND.

SERVICE SIZE	METER SIZE	MAXIMUM FLOW
4"	4"	SHALL NOT EXCEED MANUFACTURER'S RECOMMENDATIONS
6"	6"	
8"	8"	
>8"	(2) 6" METERS IN MANIFOLDED ASSEMBLY PER COM DETAILS M-27.02.1 & M-27.02.2	

2. WHERE A SINGLE DEDICATED VALVE FOR THE METER ASSEMBLY DOES NOT ALREADY EXIST, INSTALL A GATE VALVE AND VALVE BOX & COVER PER MAG DETAILS 301 AND 391-1 & 391-2 TYPE C. SEE WATER RESOURCES APPROVED PRODUCTS LIST FOR APPROVED BURIED VALVES (WWW.MESAAZ.GOV/BUSINESS/ENGINEERING)
3. OUTSIDE STEM & YOKE (OS & Y) RISING STEM FLANGED GATE VALVE WITH HAND WHEEL OPENING LEFT. APPROVED VALVES INCLUDE MUELLER, WATEROUS, AMERICAN FLOW CONTROL AND AMERICAN DARLING.
4. WHERE ANY SURFACE OF THE VALVE CONTACTS ANY SURFACE OF THE STRAINER, OTHER THAN THE FACES OF CONNECTION FLANGES WHERE SEPARATED BY A GASKET OF TYPICAL THICKNESS, THE CONTRACTOR SHALL ADDITIONALLY FURNISH & INSTALL A 1" NSF APPROVED, LEAD FREE, BRONZE OR STAINLESS STEEL FLANGE SPACER BETWEEN THE INLET VALVE AND STRAINER.
5. INSTALL BACKFLOW PREVENTION ASSEMBLY (BPA). THE BPA WILL BE EQUIPPED WITH OS & Y SHUT-OFF VALVES AS AN INTEGRAL PART OF THE APPROVED UNIT. CONTACT CITY OF MESA BACKFLOW PREVENTION AT (480) 644-6462 FOR BPA'S THAT ARE APPROVED AND APPROPRIATE FOR THE PROJECT. SEE NOTE NO. 16 REGARDING REQUIRED TESTING.
6. DIP SPOOL.
7. DIP 90° ELBOW (FLANGED OR MJ x MJ, AS NOTED).
8. ZINC COATED THREADED STEEL ROD, BOLT TO FLANGES AS SHOWN, TYPICAL BOTH SIDES. ROD DIAMETER TO MATCH NOMINAL BOLT DIAMETER FOR CONNECTING FLANGES.
9. FINISHED GRADE BENEATH METER ASSEMBLY. GRADE LEVEL AND FREE OF TRIP HAZARDS. COMPACT TO 95% OF MAXIMUM DENSITY.
10. ADJUSTABLE METAL PIPE SUPPORTS, POWDER COATED (UNLESS OTHERWISE NOTED ON PLANS) ON CONCRETE BASE. ONE REQUIRED PER EACH METER AND VALVE IN ASSEMBLY.
11. DOUBLE STRAP BRONZE SADDLE, 2" x CLOSE BRASS NIPPLE AND 2" FORD B-11-777W LOCKING CURB STOP. DRILL 2" DIAMETER HOLE IN RISER BENEATH SADDLE. INSTALL 2" MIP BRASS PLUG IN EACH CURB STOP.
12. CONCRETE BASE FOR ADJUSTABLE METAL PIPE SUPPORTS, 6" x 6" CONTINUOUS BENEATH ASSEMBLY AS SHOWN.
13. STAINLESS STEEL OR ANODIZED ALUMINUM TAG, ATTACHED TO OPERATOR WHEEL WITH #16 STAINLESS STEEL JACK CHAIN. TEXT "CUSTOMER SHUT OFF VALVE" SHALL BE ENGRAVED OR STAMPED ON TAG.

SEE M-27.01.2 FOR REFERENCED NOTES

NOT TO SCALE

mesa·az

FIRE-RATED WATER METER ASSEMBLY, 4" AND LARGER

DETAIL NO. M-27.01.1

REV. 04/06/2015

NOTES

1. COM DETAILS M-27.01.1 & M-27.01.2 SHOULD BE USED WHEREVER VERY HIGH OR VERY LOW FLOWS APPLY TO COMBINATION FIRE/DOMESTIC SERVICE INSTALLATIONS OR VERY LARGE DOMESTIC-ONLY SYSTEMS.
2. ALL FITTINGS ABOVE-GROUND SHALL BE FLANGED FITTINGS. ALL FLANGE BOLTS, NUTS AND STUDS IN ALL ABOVE-GROUND FLANGES TO BE 316 STAINLESS STEEL, LUBRICATED WITH FOOD GRADE ANTI-SEIZE COMPOUND.
3. ALL ABOVE-GROUND COMPONENTS SHALL BE PAINTED LIGHT TAN. DO NOT PAINT NAME PLATES, VALVE STEMS, METER DIALS, ELECTRONIC COMPONENTS, BACKFLOW TEST PLUGS, OR STAINLESS STEEL BOLTS AND NUTS ON FLANGES ABOVE-GROUND. SEE MESA STANDARD SPECIFICATIONS FOR SPECIFIC REQUIREMENTS AT: HTTP://WWW.DEV.MESAAZ.GOV/ENGINEERING/MESASTANDARDANDSPECS.ASPX.
4. CITY OF MESA LARGE WATER METERS (4" AND LARGER) SHALL BE LOCATED IN AN AREA ADJACENT TO OR IMMEDIATELY ACCESSIBLE FROM A PERMANENT VEHICULAR ACCESS ROAD, BUT NOT IN A TRAFFIC AREA.
5. INSTALL BRASS PIPE PLUG IN EACH TESTCOCK ON THE ASSEMBLY.
6. ALL METER ASSEMBLIES SHALL BE PROTECTED BY GUARD POSTS PER COM DETAIL M-32.
7. FINISHED GRADE SHALL BE COMPACTED TO 95% OF MAXIMUM DENSITY, SURFACE UNDER METER ASSEMBLY SHALL BE FLAT AND FREE FROM TRIP HAZARDS.
8. THE CITY OF MESA WATER METER SHOP STAFF SHALL ASSIST IN ALL INSPECTIONS. CONTACT THE WATER METER SHOP AT 480-644-2641.
9. WHERE A 10" SERVICE IS REQUIRED, APPLY THIS DETAIL USING TWO (2) 6" METERS MANIFOLDED IN AN ASSEMBLY PER COM DETAILS M-27.02.1 & M-27.02.2.
10. 4" AND LARGER METERS ARE DESIGNED TO BE SERVICED, MAINTAINED AND TESTED IN-LINE TO AVOID UNNECESSARY AND COSTLY SHOP REPAIRS.
11. AT LOW FLOW RATES, ALL FLOW IS THROUGH THE LOW FLOW SECTION. WHEN PRESSURE LOSS THROUGH THE LOW FLOW SECTION APPROACHES FOUR (4) PSI, THE MAINLINE VALVE AUTOMATICALLY OPENS TO ALLOW FLOW THROUGHOUT THE MAINLINE SECTION. THESE METERS ARE CAPABLE OF PICKING UP VERY LOW RATES AS COMPARED TO A TURBINE METER OF EQUAL SIZE. READINGS FROM ALL REGISTERS ARE COMBINED TO PROVIDE TOTAL CONSUMPTION INFORMATION.
12. SCREENING SHALL BE REQUIRED PER CITY OF MESA PLANNING DIVISION REQUIREMENTS. (NOT SHOWN).
13. A 24-INCH MINIMUM CLEARANCE BETWEEN A BACKFLOW PREVENTION ASSEMBLY (BPA) AND PERMANENT STRUCTURES SHALL BE PROVIDED.
14. THE METER(S) ARE CITY OF MESA OWNED. THE BPA IS PRIVATELY OWNED.
15. THE METER(S) SHALL BE PURCHASED FROM THE CITY. ALLOW UP TO 8-WEEKS FOR DELIVERY. CONTACT THE DEVELOPMENT AND SUSTAINABILITY DIVISION AT 480-644-4273 TO PURCHASE AND THE WATER METER SHOP AT 480-644-2641 TO INQUIRE ABOUT LEAD TIMES.
16. THE BPA SHALL BE TESTED AND "PASSED" BY A CERTIFIED TECHNICIAN DESIGNATED IN THE CURRENT CITY OF MESA LIST OF APPROVED INSPECTORS AT: HTTP//WWW.MESAAZ.GOV/WATER/BACKFLOW/PDF/GENERAL.PDF PRIOR TO THE REQUEST FOR FINAL INSPECTION.
17. WHEN A 4" BADGER MODEL FSAA-01 METER ASSEMBLY IS INSTALLED THE CONTRACTOR SHALL FURNISH AND INSTALL A 1-INCH FLANGE SPACER BETWEEN THE GATE VALVE AND STRAINER.

SEE M–27.01.1

mesa·az

FIRE-RATED WATER METER ASSEMBLY, 4" AND LARGER - NOTES

DETAIL NO. M-27.01.2

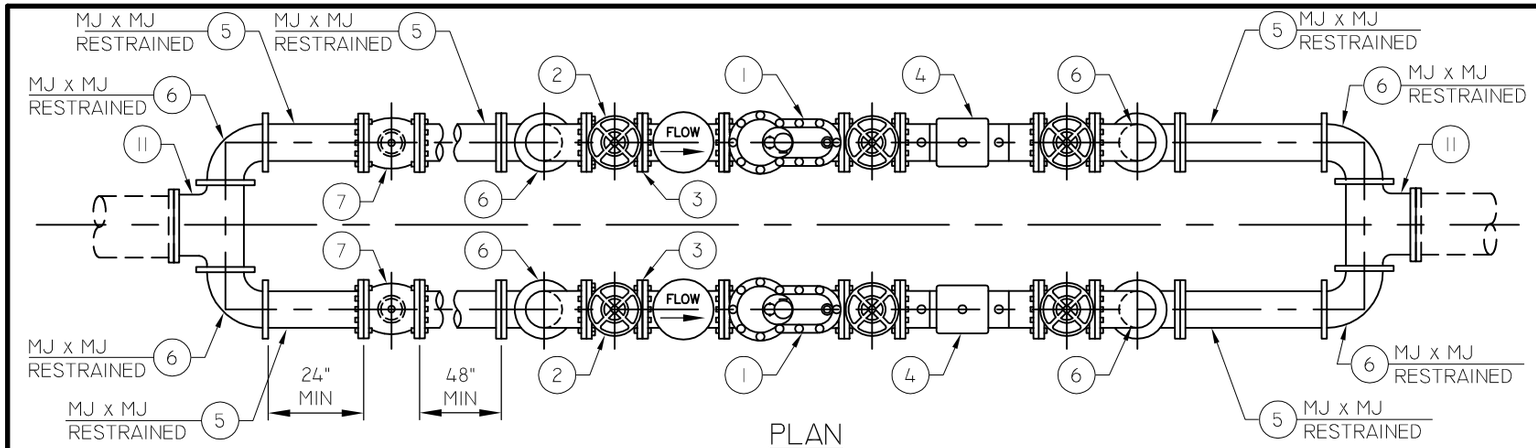

PLAN

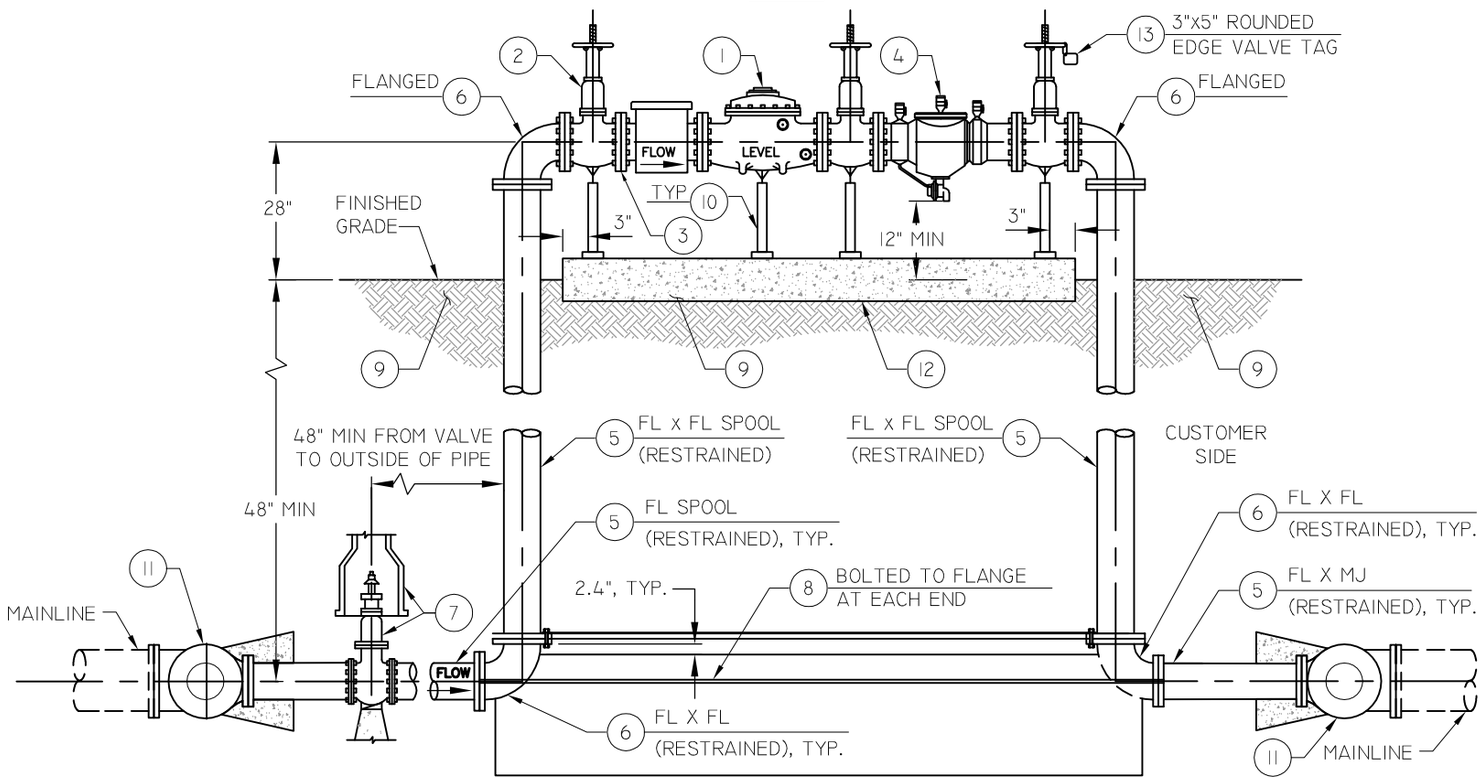

SECTION

(ONE SIDE OF MANIFOLD SHOWN ONLY)

METER ASSEMBLY KEY NOTES

1. 6-INCH WATER METER. THE METERS SHALL BE PURCHASED FROM THE CITY. ALLOW UP TO 8-WEEKS FOR DELIVERY. CONTACT THE DEVELOPMENT AND SUSTAINABILITY DIVISION AT 480-644-4273 TO PURCHASE AND THE WATER METER SHOP AT 480-644-2641 TO INQUIRE ABOUT LEAD TIMES.
2. OUTSIDE STEM & YOKE (OS & Y) RISING STEM FLANGED GATE VALVE WITH HAND WHEEL OPENING LEFT. BURIED VALVES SHALL BE PER WATER RESOURCES APPROVED PRODUCTS LIST (WWW.MESAAZ.GOV/BUSINESS/ENGINEERING)
3. FLANGE FACES WHEN SEPARATED BY ONE TYPICAL GASKET. CONTRACTOR SHALL FURNISH & INSTALL AN AWWA APPROVED, LEAD FREE (CURRENT NSE REGULATION COMPLIANT) BRONZE OR STAINLESS STEEL BODIED, Z TYPE PLATE STRAINER EQUIPPED WITH 316 STAINLESS STEEL FASTENERS, STAINLESS STEEL OR BRASS DRAIN PLUG AND STAINLESS STEEL SCREEN DIRECTLY UPSTREAM OF THE WATER METER USING 316 STAINLESS STEEL HARDWARE.
4. INSTALL BACKFLOW PREVENTION ASSEMBLY (BPA). THE BPA WILL BE EQUIPPED WITH OS &Y SHUT-OFF VALVES AS AN INTEGRAL PART OF THE APPROVED UNIT. CONTACT CITY OF MESA BACKFLOW PREVENTION AT (480) 644-6462 FOR BPA'S THAT ARE APPROVED AND APPROPRIATE FOR THE PROJECT. SEE NOTE No. 16 REGARDING REQUIRED TESTING.
5. DIP SPOOL.
6. CIP 90° ELBOW (FLANGED FL, AS NOTED).
7. GATE VALVE, VALVE BOX AND COVER PER MAG STD DETAILS 301 & 391, TYPE C. MJ x MJ RESTRAINED.
8. ZINC COATED THREADED STEEL ROD, BOLT TO FLANGES AS SHOWN, TYPICAL BOTH SIDES. ROD DIAMETER TO MATCH NOMINAL BLOT DIAMETER FOR CONNECTING FLANGES.
9. FINISHED GRADE BENEATH METER ASSEMBLY. GRADE LEVEL AND FREE OF TRIP HAZARDS. COMPACT TO 95% OF MAXIMUM DENSITY.
10. ADJUSTABLE METAL PIPE SUPPORTS, POWDER COATED (UNLESS OTHERWISE NOTED ON PLANS) ON CONCRETE BASE. ONE REQUIRED PER EACH METER AND VALVE IN ASSEMBLY.
11. 6" x 6" x (MAINLINE SIZE) TEE. MJ x MJ RESTRAINED.
12. CONCRETE BASE FOR ADJUSTABLE METAL PIPE SUPPORTS, 6" X 6" CONTINUOUS BENEATH ASSEMBLY AS SHOWN.
13. STAINLESS STEEL OR ANODIZED ALUMINUM TAG, ATTACHED TO OPERATOR WHEEL WITH #16 STAINLESS STEEL JACK CHAIN. TEXT "CUSTOMER SHUT OFF VALVE" SHALL BE ENGRAVED OR STAMPED ON TAG.

SEE M-27.02.2 FOR REFERENCED NOTES

NOT TO SCALE

mesa·az

MANIFOLDED 6" WATER METER ASSEMBLY

DETAIL NO. M-27.02.1

REV.04/06/2015

NOTES

1. THIS DETAIL SHALL BE USED WHERE VERY HIGH OR VERY LOW FLOWS ARE REQUIRED FOR EITHER A COMBINATION FIRE/DOMESTIC SERVICE OR VERY LARGE DOMESTIC SERVICE.
2. A MANIFOLDED ASSEMBLY WITH TWO (2) 6" METERS SHALL BE USED FOR REPLACEMENT OF A 10" METER SO THAT FLOWS WILL EXCEED THE CAPACITY OF A 10" SERVICE AND ASSOCIATED COSTS ARE REDUCED.
3. ALL FITTINGS ABOVE-GROUND SHALL BE FLANGED FITTINGS. ALL FLANGE BOLTS, NUTS AND STUDS IN ALL ABOVE-GROUND FLANGES TO BE 316 STAINLESS STEEL, LUBRICATED WITH FOOD GRADE ANTI-SEIZE COMPOUND.
4. ALL ABOVE-GROUND COMPONENTS SHALL BE PAINTED LIGHT TAN. DO NOT PAINT NAME PLATES, VALVE STEMS, METER DIALS, ELECTRONIC COMPONENTS, BACKFLOW TEST PLUGS, OR STAINLESS STEEL BOLTS AND NUTS ON FLANGES ABOVE-GROUND. SEE MESA STANDARD SPECIFICATIONS FOR SPECIFIC REQUIREMENTS AT: HTTP://WWW.DEV.MESAAZ.GOV/ENGINEERING/MESASTANDARDANDSPECS.ASPX.
5. CITY OF MESA LARGE WATER METERS (4" AND LARGER) SHALL BE LOCATED IN AN AREA ADJACENT TO OR IMMEDIATELY ACCESSIBLE FROM A PERMANENT VEHICULAR ACCESS ROAD, BUT NOT IN A TRAFFIC AREA.
6. INSTALL BRASS PIPE PLUG IN EACH TESTCOCK ON THE ASSEMBLY.
7. ALL METER ASSEMBLIES SHALL BE PROTECTED BY GUARD POSTS PER COM DETAIL M-32.
8. FINISHED GRADE SHALL BE COMPACTED TO 95% OF MAXIMUM DENSITY, SURFACE UNDER METER ASSEMBLY SHALL BE FLAT AND FREE FROM TRIP HAZARDS.
9. THE CITY OF MESA WATER METER SHOP STAFF SHALL ASSIST IN ALL INSPECTIONS. CONTACT THE WATER METER SHOP AT 480-644-2641.
10. 4" AND LARGER METERS ARE DESIGNED TO BE SERVICED, MAINTAINED AND TESTED IN-LINE TO AVOID UNNECESSARY AND COSTLY SHOP REPAIRS.
11. AT LOW FLOW RATES, ALL FLOW IS THROUGH THE LOW FLOW SECTION. WHEN PRESSURE LOSS THROUGH THE LOW FLOW SECTION APPROACHES FOUR (4) PSI, THE MAINLINE VALVE AUTOMATICALLY OPENS TO ALLOW FLOW THROUGHOUT THE MAINLINE SECTION. THESE METERS ARE CAPABLE OF PICKING UP VERY LOW RATES AS COMPARED TO A TURBINE METER OF EQUAL SIZE. READINGS FROM ALL REGISTERS ARE COMBINED TO PROVIDE TOTAL CONSUMPTION INFORMATION.
12. SCREENING SHALL BE REQUIRED PER CITY OF MESA PLANNING DIVISION REQUIREMENTS. (NOT SHOWN).
13. A 24-INCH MINIMUM CLEARANCE BETWEEN A BACKFLOW PREVENTION ASSEMBLY (BPA) AND PERMANENT STRUCTURES SHALL BE PROVIDED.
14. THE METER(S) ARE CITY OF MESA OWNED. THE BPA IS PRIVATELY OWNED.
15. THE METER(S) SHALL BE PURCHASED FROM THE CITY. ALLOW UP TO 8-WEEKS FOR DELIVERY. CONTACT THE DEVELOPMENT AND SUSTAINABILITY DIVISION AT 480-644-4273 TO PURCHASE AND THE WATER METER SHOP AT 480-644-2641 TO INQUIRE ABOUT LEAD TIMES.
16. THE BACKFLOW PREVENTION ASSEMBLY SHALL BE TESTED AND "PASSED" BY A CERTIFIED TECHNICIAN DESIGNATED IN THE CURRENT CITY OF MESA LIST OF APPROVED INSPECTORS AT: HTTP//WWW.MESAAZ.GOV/WATER/BACKFLOW/PDF/GENERAL.PDF PRIOR TO THE REQUEST FOR FINAL INSPECTION.

SEE M-27.02.1

mesa·az

MANIFOLDED 6" WATER METER ASSEMBLY - NOTES

DETAIL NO.
M-27.02.2

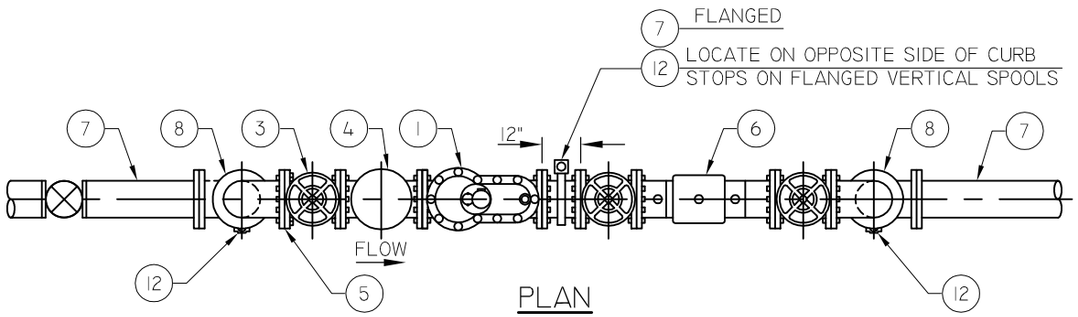

PLAN

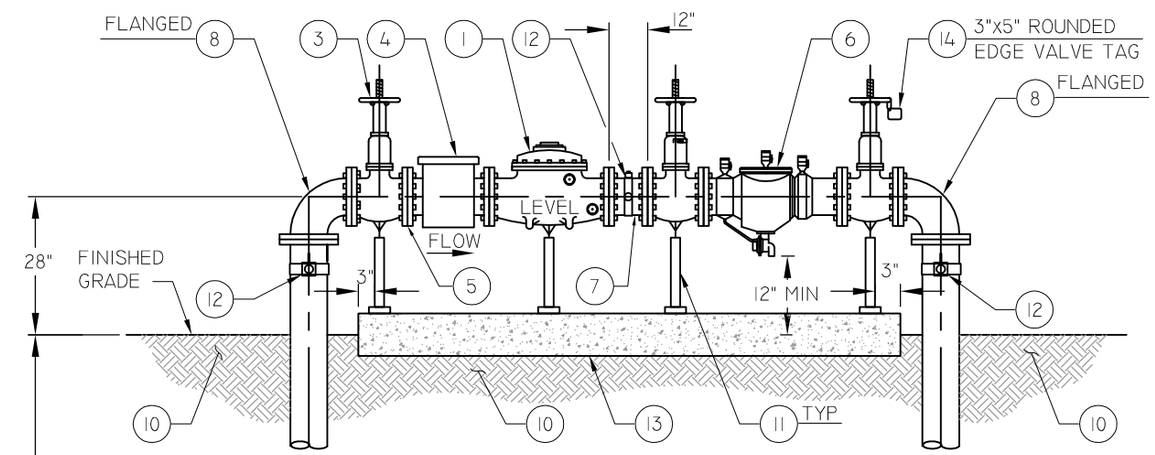

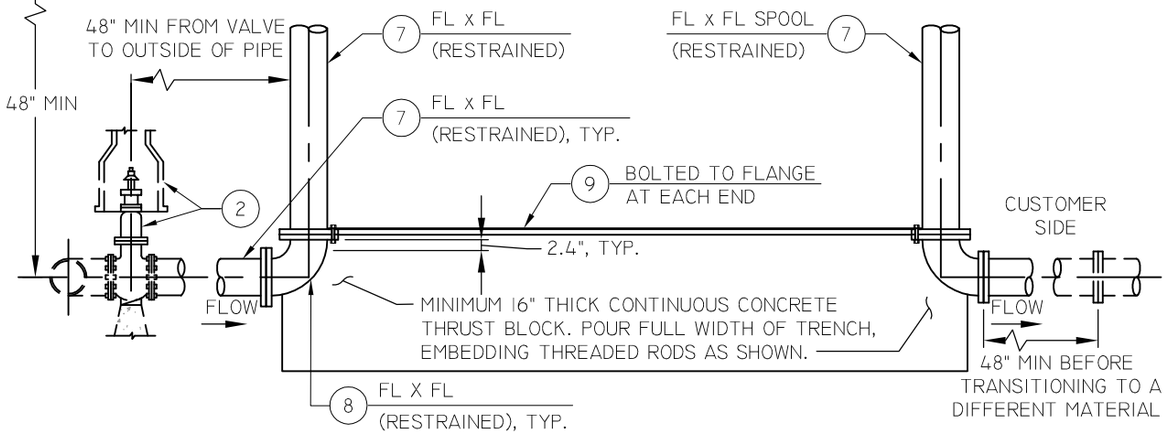

SECTION

METER ASSEMBLY KEY NOTES

1. SINGLE OR COMPOUND (TWO METERS MANIFOLDED) METER ASSEMBLY PER TABLE BELOW. ALL FITTINGS ABOVE GROUND SHALL BE FLANGED FITTINGS. ALL FLANGE BOLTS, NUTS AND STUDS IN ALL ABOVE GROUND FLANGES SHALL BE 316 STAINLESS STEEL AND LUBRICATED WITH FOOD GRADE ANTI-SEIZE COMPOUND.

SERVICE SIZE	METER SIZE	MAXIMUM CONSTANT USE FLOW
4"	4"	SHALL NOT EXCEED MANUFACTURER'S RECOMMENDATION
6"	6"	
>6"	USE METER ASSEMBLY PER COM DETAILS M-27.01.1 & M-27.01.2 OR M-27.02.1 & M-27.02.2	

2. WHERE A SINGLE DEDICATED VALVE FOR THE METER ASSEMBLY DOES NOT ALREADY EXIST, INSTALL A GATE VALVE AND VALVE BOX & COVER PER MAG DETAILS 301 AND 391-1 & 391-2 TYPE C. BURIED VALVES SHALL BE PER WATER RESOURCES APPROVED PRODUCTS LIST (WWW.MESAAZ.GOV/BUSINESS/ENGINEERING)
3. OUTSIDE STEM & YOKE (OS & Y) RISING STEM FLANGED GATE VALVE WITH HAND WHEEL OPENING LEFT.
4. CONTRACTOR SHALL FURNISH & INSTALL A STRAINER DIRECTLY UPSTREAM OF THE WATER METER USING 316 STAINLESS STEEL HARDWARE. THE STRAINER SHALL BE AN AWWA APPROVED, NSF REGULATION COMPLIANT, LEAD FREE AND BRONZE OR STAINLESS STEEL BODIED Z-TYPE PLATE. THE STRAINER SHALL BE EQUIPPED WITH 316 STAINLESS STEEL FASTENERS, A STAINLESS STEEL OR BRASS DRAIN PLUG AND A STAINLESS STEEL SCREEN.
5. WHERE ANY SURFACE OF THE VALVE CONTACTS ANY SURFACE OF THE STRAINER, OTHER THAN THE FACES OF CONNECTION FLANGES WHERE SEPARATED BY A GASKET OF TYPICAL THICKNESS, THE CONTRACTOR SHALL ADDITIONALLY FURNISH & INSTALL A 1" NSF APPROVED, LEAD FREE, BRONZE OR STAINLESS STEEL FLANGE SPACER BETWEEN THE INLET VALVE AND STRAINER.
6. INSTALL BACKFLOW PREVENTION ASSEMBLY (BPA). THE BPA WILL BE EQUIPPED WITH OS & Y SHUT-OFF VALVES AS AN INTEGRAL PART OF THE APPROVED UNIT. CONTACT CITY OF MESA BACKFLOW PREVENTION AT (480) 644-6462 FOR BPA'S THAT ARE APPROVED AND APPROPRIATE FOR THE PROJECT. SEE NOTE No. 16 REGARDING REQUIRED TESTING.
7. DIP SPOOL, SINGLE LENGTH.
8. DIP 90° ELBOW (FLANGED OR MJ x MJ, AS NOTED)
9. ZINC COATED THREADED STEEL ROD, BOLT TO FLANGES AS SHOWN, TYPICAL BOTH SIDES. ROD DIAMETER TO MATCH NOMINAL BOLT DIAMETER FOR CONNECTING FLANGES.
10. FINISHED GRADE BENEATH METER ASSEMBLY. GRADE LEVEL AND FREE OF TRIP HAZARDS. COMPACT TO 95% OF MAXIMUM DENSITY.
11. ADJUSTABLE METAL PIPE SUPPORTS, POWDER COATED (UNLESS OTHERWISE NOTED ON PLANS) ON CONCRETE BASE. ONE REQUIRED PER EACH METER AND VALVE IN ASSEMBLY.
12. DOUBLE STRAP BRONZE SADDLE, 2" x CLOSE BRASS NIPPLE AND 2" FORD B-11-777W LOCKING CURB STOP. DRILL FULL 2" HOLE BENEATH. INSTALL 2" MIP BRASS PLUG IN EACH CURB STOP.
13. CONCRETE BASE FOR ADJUSTABLE METAL PIPE SUPPORTS, 6" X 6" CONTINUOUS BENEATH ASSEMBLY AS SHOWN.
14. STAINLESS STEEL OR ANODIZED ALUMINUM TAG, ATTACHED TO OPERATOR WHEEL WITH #16 STAINLESS STEEL JACK CHAIN. TEXT "CUSTOMER SHUT OFF VALVE" SHALL BE ENGRAVED OR STAMPED ON TAG.

SEE M-28.01.2 FOR REFERENCED NOTES

NOT TO SCALE

mesa·az

NON-FIRE-RATED WATER METER ASSEMBLY, 4" AND 6"

DETAIL NO. M-28.01.1

REV. 04/06/2015

NOTES

1. DETAILS M-28.01.1 & M-28.01.2 ARE GENERALLY USED WHERE FIRE PROTECTION IS PROVIDED BY SEPARATE FACILITIES SUCH AS FIRE LINE DETECTORS OR A DIRECT FIRE LINE TO THE PROPERTY AND TYPICALLY FOR SITES SUCH AS HOTELS, MOTELS, INSTITUTIONS, FACTORIES, SCHOOLS, APARTMENT BUILDINGS, OFFICE BUILDINGS, ETC.
2. WHERE HIGHER NON-FIRE FLOWS ARE REQUIRED USE COM DETAILS M-27.01.1 & M-27.01.2 OR M-27.02.1 & M-27.02.2.
3. WHERE A 10" SERVICE IS REQUIRED, APPLY THIS DETAIL FOR A COMPOUND METER ASSEMBLY CONSISTING OF TWO (2) MANIFOLDED 6" METERS PER COM DETAILS M-27.02.1 & M-27.02.2.
4. ALL FITTINGS ABOVE GROUND SHALL BE FLANGED FITTINGS. ALL FLANGE BOLTS, NUTS AND STUDS IN ALL ABOVE GROUND FLANGES TO BE 316 STAINLESS STEEL, LUBRICATED WITH FOOD GRADE ANTI-SEIZE COMPOUND.
5. ALL ABOVE-GROUND COMPONENTS SHALL BE PAINTED LIGHT TAN. DO NOT PAINT NAME PLATES, VALVE STEMS, METER DIALS, ELECTRONIC COMPONENTS, OR BACKFLOW TEST PLUGS, OR STAINLESS STEEL BOLTS AND NUTS ON FLANGES ABOVE-GROUND. SEE MESA STANDARD SPECIFICATIONS FOR SPECIFIC REQUIREMENTS AT: HTTP://WWW.DEV.MESAAZ.GOV/ENGINEERING/MESASTANDARDANDSPECS.ASPX.
6. CITY OF MESA LARGE WATER METERS (4" AND LARGER) SHALL BE LOCATED IN AN AREA ADJACENT TO OR IMMEDIATELY ACCESSIBLE FROM A PERMANENT VEHICULAR ACCESS ROAD, BUT NOT IN A TRAFFIC AREA.
7. INSTALL BRASS PIPE PLUG IN EACH TESTCOCK ON THE ASSEMBLY.
8. ALL METER ASSEMBLIES SHALL BE PROTECTED BY GUARD POSTS PER COM DETAIL M-32.
9. FINISHED GRADE SHALL BE COMPACTED TO 95% OF MAXIMUM DENSITY, SURFACE UNDER METER ASSEMBLY SHALL BE FLAT AND FREE FROM TRIP HAZARDS.
10. WATER METER SHOP STAFF SHALL ASSIST IN ALL INSPECTIONS. CONTACT WATER METER SHOP AT 480-644-2641.
11. 4" AND LARGER METERS ARE DESIGNED TO BE SERVICED, MAINTAINED AND TESTED IN-LINE TO MINIMIZE UNNECESSARY AND COSTLY SHOP REPAIR.
12. A COMPOUND METER IS DESIGNED TO REGISTER LOW FLOWS AND HIGH FLOWS SEPARATELY. THESE FLOWS ARE TOTALED TO REFLECT CONSUMPTION. A SINGLE METER USES ONE MEASURING ELEMENT AND ONE REGISTER FOR MEASURING CONSUMPTION.
13. SCREENING SHALL BE REQUIRED PER CITY OF MESA PLANNING DIVISION REQUIREMENTS. (NOT SHOWN).
14. A 24-INCH MINIMUM CLEARANCE BETWEEN BACKFLOW PREVENTION ASSEMBLY (BPA) AND PERMANENT STRUCTURES SHALL BE PROVIDED.
15. THE METER(S) ARE CITY OF MESA OWNED AND SHALL BE PURCHASED FROM THE CITY. ALLOW UP TO 8-WEEKS FOR DELIVERY. CONTACT THE DEVELOPMENT AND SUSTAINABILITY DIVISION AT 480-644-4273 TO PURCHASE AND THE WATER METER SHOP AT 480-644-2641 TO INQUIRE ABOUT LEAD TIMES.
16. BPA IS PRIVATELY OWNED. THE BPA SHALL BE TESTED AND "PASSED" BY A CERTIFIED TECHNICIAN DESIGNATED IN THE CURRENT CITY OF MESA LIST OF APPROVED INSPECTORS LIST AT: HTTP//WWW.MESAAZ.GOV/WATER/BACKFLOW/PDF/GENERAL.PDF PRIOR TO THE REQUEST FOR FINAL INSPECTION.

SEE M-28.01.1

mesa·az

NON-FIRE-RATED WATER METER ASSEMBLY, 4" AND 6" - NOTES

DETAIL NO.
M-28.01.2

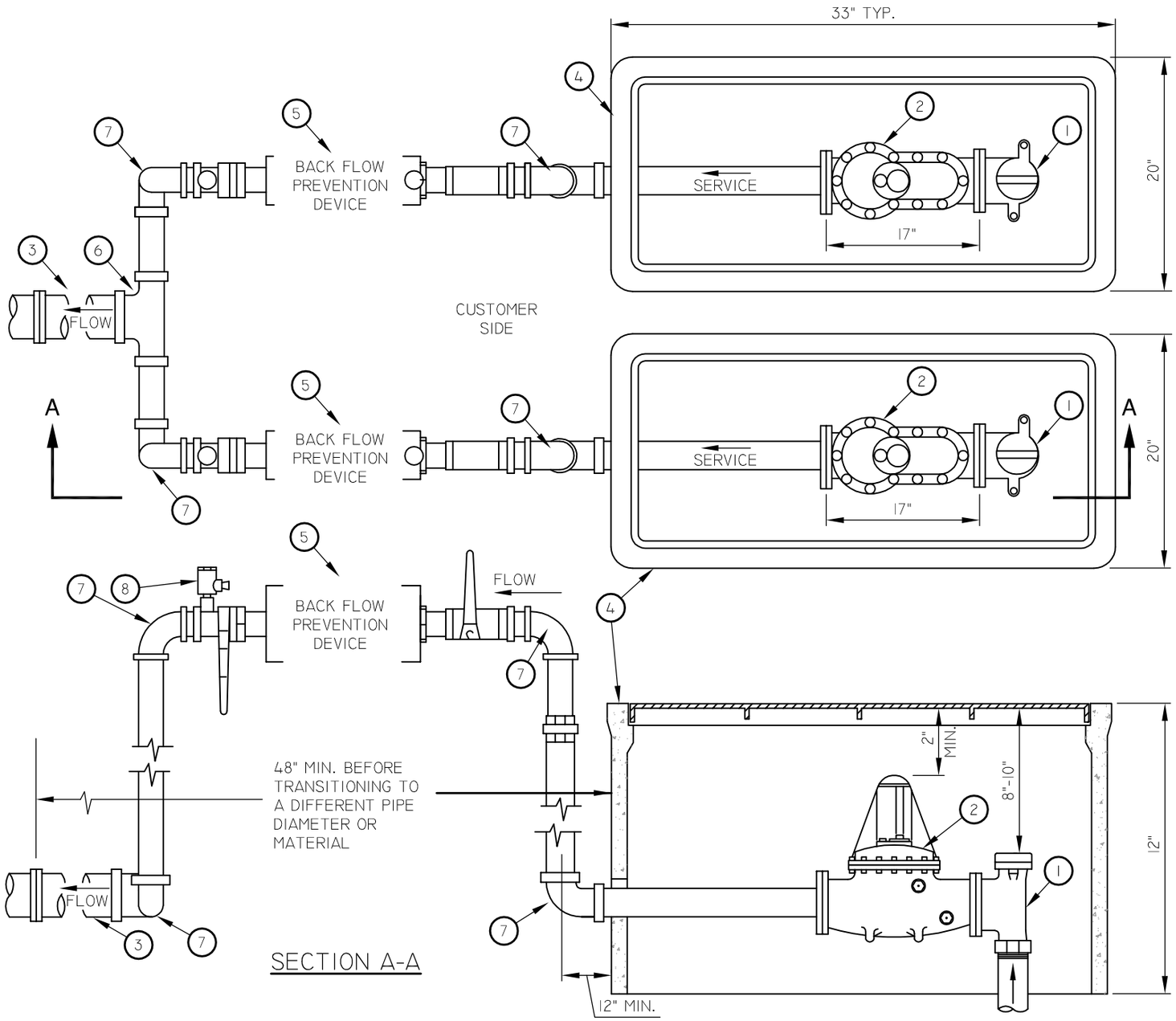

LIST OF MATERIALS

1. 2" ANGLE METER VALVE (LOCKING TYPE) - CITY SIDE OF INLET SERVICE LINE. (SEE COM DETAIL M-49.02).
2. CITY OF MESA WILL PROVIDE AND INSTALL WATER METER. SEE NOTE 3 BELOW.
3. 3" DIA. TYPE K COPPER WATER SERVICE PIPE. (SEE COM DETAIL M-49.02)
4. WATER METER BOX AND COVER PER COM DETAIL M-29.
5. CITY-APPROVED BACKFLOW PREVENTION ASSEMBLY PER COM DETAILS M-31.03, M-31.04, OR M-31.05 (DEPENDING ON THE TYPE OF DEVELOPMENT).
6. 2"X3"X2" COPPER TEE SOLDERED
7. 2" COPPER 90° BEND SOLDERED
8. ATTACH STAINLESS STEEL OR ANODIZED ALUMINUM TAG AT VALVE. TEXT "CUSTOMER SHUT OFF VALVE" SHALL BE ENGRAVED OR STAMPED ON TAG.

NOTES

1. TOP OF WATER METER SHALL BE A MINIMUM OF 2" BELOW UNDERSIDE OF COVER.
2. METERS SHALL NOT BE INSTALLED IN DRIVEWAYS OR IN A LOCATION INACCESSIBLE FOR MAINTENANCE.
3. ALL METERS SHALL BE PURCHASED FROM THE CITY OF MESA.
4. SEE COM DETAILS M-29 AND M-49.01 THROUGH M-49.03 FOR INSTALLATION.

NOT TO SCALE

mesa·az

PARALLEL 2" WATER METERS FOR 3" WATER SERVICES

DETAIL NO. M-28.02

REV. 03/24/2015

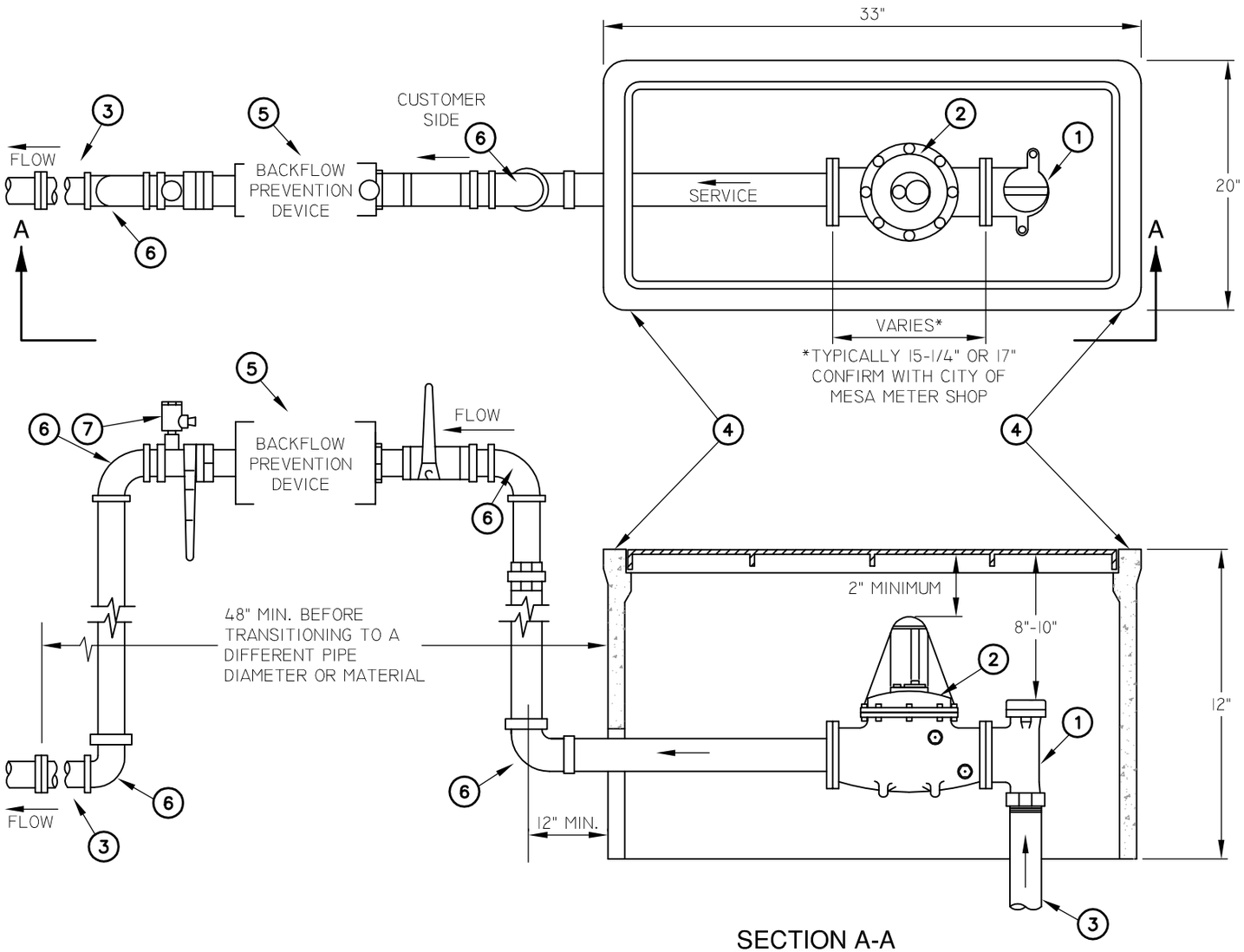

SECTION A-A

LIST OF MATERIALS

1. 1 1/2" OR 2" ANGLE METER VALVE (LOCKING TYPE) - CITY SIDE OF INLET SERVICE LINE. (SEE COM DETAIL M-49.02)
2. CITY OF MESA WILL PROVIDE AND INSTALL WATER METER. SEE NOTE 3 BELOW.
3. TYPE K COPPER (SEE COM DETAIL M-49.02).
4. POLYMER CONCRETE WATER METER BOX AND LID ASSEMBLY PER APPROVED PRODUCTS LIST.
5. CITY APPROVED BACKFLOW PREVENTION ASSEMBLY PER COM DETAILS M-31.03, M-31.04, OR M-31.05 (DEPENDING ON THE TYPE OF DEVELOPMENT).
6. 2" COPPER 90° BEND SOLDERED.

WATER METER SIZE	METER BOX NUMBER
1 1/2" AND 2"	SEE APPROVED PRODUCTS LIST

7. ATTACH STAINLESS STEEL OR ANODIZED ALUMINUM TAG AT VALVE. TEXT "CUSTOMER SHUT OFF VALVE" SHALL BE ENGRAVED OR STAMPED ON TAG.

NOTES

1. TOP OF WATER METER SHALL BE A MINIMUM OF 2" BELOW UNDERSIDE OF COVER.
2. METERS SHALL NOT BE INSTALLED IN DRIVEWAYS OR IN A LOCATION INACCESSIBLE FOR MAINTENANCE.
3. ALL METERS SHALL BE PURCHASED FROM THE CITY OF MESA.
4. SEE COM DETAILS M-49.01 THROUGH M-49.03 FOR INSTALLATION.
5. WATER METER SIZES 1 1/2" AND 2" MAY BE REDUCED FROM AN EXISTING WATER SERVICE AND VALVE TO A SIZE WHICH IS ADEQUATE TO SUPPLY THE FIXTURE COUNT DEMAND UPON APPROVAL OF DEVELOPMENT SERVICE'S BUILDING INSPECTION. THE PARTY REQUESTING THE REDUCTION SHALL BE RESPONSIBLE FOR THE COST OF INSTALLING AN APPROVED ADAPTER BETWEEN THE EXISTING SERVICE VALVE AND THE INLET OF THE WATER METER AND A MINIMUM OF 48" OF METER SIZE APPROVED PIPING DOWNSTREAM OF THE WATER METER. WHERE BACKFLOW PREVENTION IS REQUIRED THE BACKFLOW DEVICE MUST BE THE SAME SIZE AS THE REQUESTED WATER METER. THE LENGTH OF THE BACKFLOW PREVENTER AND ITS METER SIZE PIPING SHALL BE COUNTED AS PART OF THE REQUIRED 48" PIPING REDUCTION.

NOT TO SCALE

mesa·az

1 1/2" & 2" APPROVED WATER METERS

DETAIL NO. M-29

REV. 03/24/2015

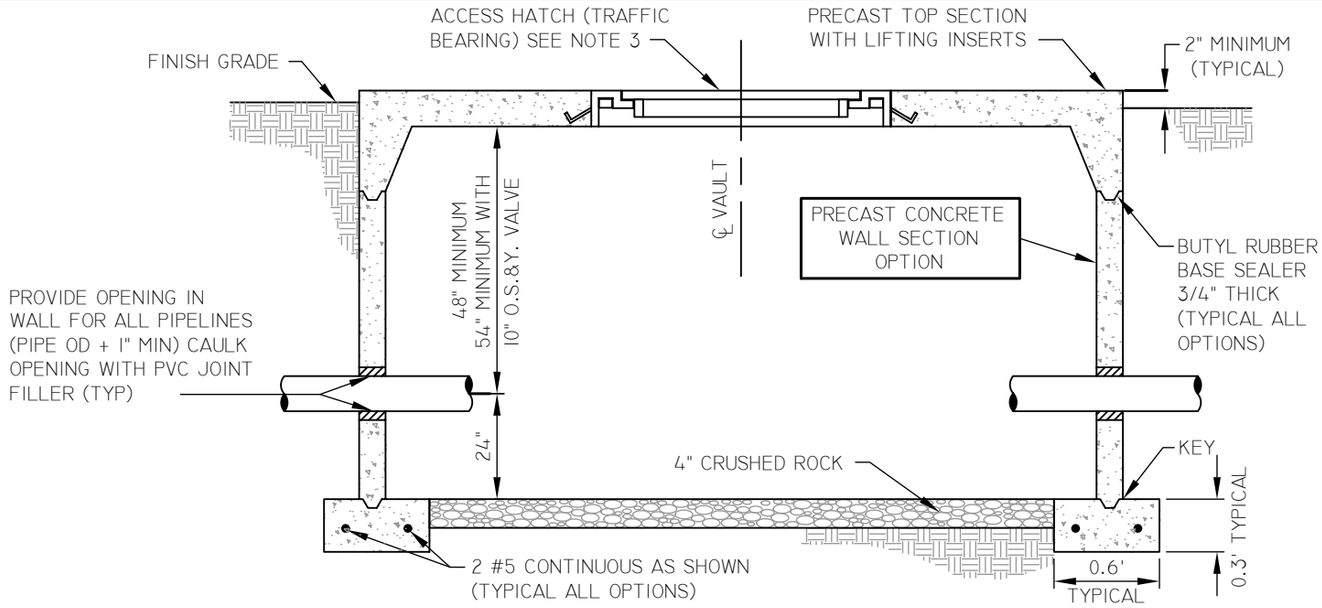

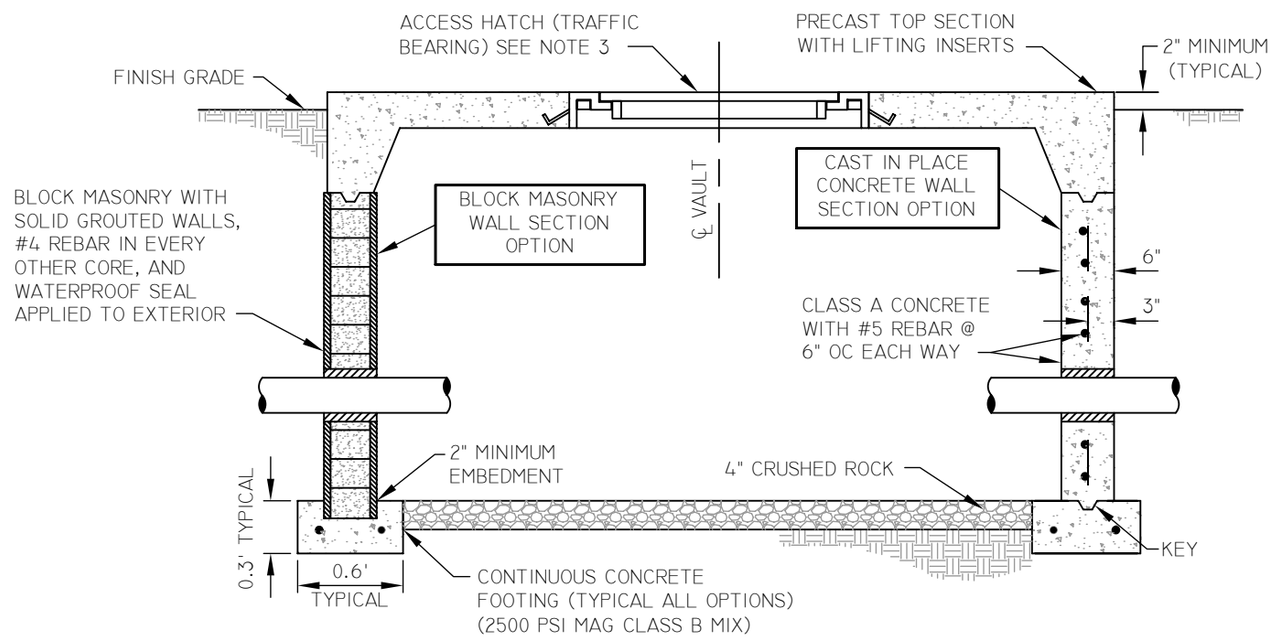

CONSTRUCTION NOTES

1. METER VAULT SHALL BE LOCATED IN AREA IMMEDIATELY ADJACENT TO OR BE ACCESSIBLE FROM A PERMANENT VEHICULAR ACCESS ROAD (BUT NOT IN A TRAFFIC AREA).
2. METER VAULT WALLS MAY BE CONSTRUCTED OF BLOCK MASONRY, CAST-IN-PLACE CONCRETE, OR PRECAST CONCRETE. TOP SECTION SHALL BE PRECAST CONCRETE WITH LIFTING INSERTS AND ACCESS HATCH INSTALLED BY PRECAST MANUFACTURER.
3. ACCESS HATCH SHALL BE 42" SQUARE TYPE "J" SPECIAL AS MANUFACTURED BY THE BILCO COMPANY OR 42" SQUARE AS MANUFACTURED BY UTILITY VAULT COMPANY. THE HATCH SHALL BE FLUSH MOUNTED, TORSION ASSISTED WITH REMOVABLE HANDLE OR PENTA HEAD BOLTS. THE HATCH SHALL BE DIAMOND PATTERN ALUMINUM. ALL SURFACES IN CONTACT WITH CONCRETE SHALL BE COATED WITH COAL TAR EPOXY.
4. SEE COM DETAIL M-30.02 FOR MINIMUM INTERIOR VAULT DIMENSIONS REQUIRED BY VARIOUS TYPES AND SIZES OF WATER METERS.
5. A 1.5 FOOT WIDE ACCESS LADDER IS REQUIRED IN ALL VAULTS GREATER THAN SIX (6) FEET IN DEPTH. THE LADDER SHALL BE OF ALUMINUM CONSTRUCTION AND OSHA APPROVED. THE LADDER SHALL BE COATED WITH A RUST PROOF PAINT AFTER COMPLETION OF CONSTRUCTION.
6. ALL METERS SHALL BE PURCHASED FROM THE CITY OF MESA.

SPECIAL NOTE: ABOVE-GROUND INSTALLATION IS REQUIRED FOR WATER METERS 3" AND LARGER. THIS DETAIL FOR A BELOW GROUND INSTALLATION MAY BE USED ONLY WITH SPECIAL PERMISSION FROM THE CITY OF MESA'S WATER DIVISION AND THEN ONLY IN INSTANCES WHERE AN ABOVE-GROUND INSTALLATION IS NOT POSSIBLE.

NOT TO SCALE

mesa·az

SPECIAL WATER METER VAULT
FOR BURIED METERS 3" OR LARGER

DETAIL NO.
M-30.01

REV. 1/31/2014

METER TYPE AND APPLICATION	METER SIZE	MINIMUM INSIDE VAULT DIMENSIONS*		
		WIDTH	LENGTH	HEIGHT
NON-FIRE RATED WATER METER (M-28.01)	3"	6'-0"	6'-0"	6'-0"
	4"	6'-0"	6'-0"	6'-0"
	6"	6'-0"	6'-0"	6'-0"
FIRE-RATED WATER METER (M-27.01) WITH LARGE DIAMETER BYPASS	4"	8'-0"	6'-3"	6'-0"
	6"	8'-0"	7'-6"	6'-0"
	8"	8'-0"	8'-6"	6'-0"
FIRE-RATED WATER METER (M-27.01) WITHOUT LARGE DIAMETER BYPASS	4"	6'-0"	6'-3"	6'-0"
	6"	6'-0"	7'-6"	6'-0"
	8"	6'-9"	8'-6"	6'-0"

* DIMENSIONS SHOWN REPRESENT ACCEPTABLE MINIMUMS. CONTRACTOR SHALL VERIFY THAT SPECIFIED MINIMUM CLEAR DISTANCES BETWEEN PIPING AND VAULT ARE PROVIDED BASED ON ACTUAL EQUIPMENT BEING FURNISHED. (MINIMUM WIDTH OF VAULTS TO BE 6'-0".)

SPECIAL NOTE:
ABOVE-GROUND INSTALLATION IS REQUIRED FOR WATER METERS 3" AND LARGER. THIS DETAIL FOR A BELOW GROUND INSTALLATION MAY BE USED ONLY WITH SPECIAL PERMISSION FROM THE CITY OF MESA'S WATER DIVISION AND THEN ONLY IN INSTANCES WHERE AN ABOVE GROUND INSTALLATION IS NOT POSSIBLE.

mesa·az

WATER METER VAULT DIMENSIONS
FOR BURIED METERS 3" & LARGER

DETAIL NO.
M-30.02

REV. 1/31/2014

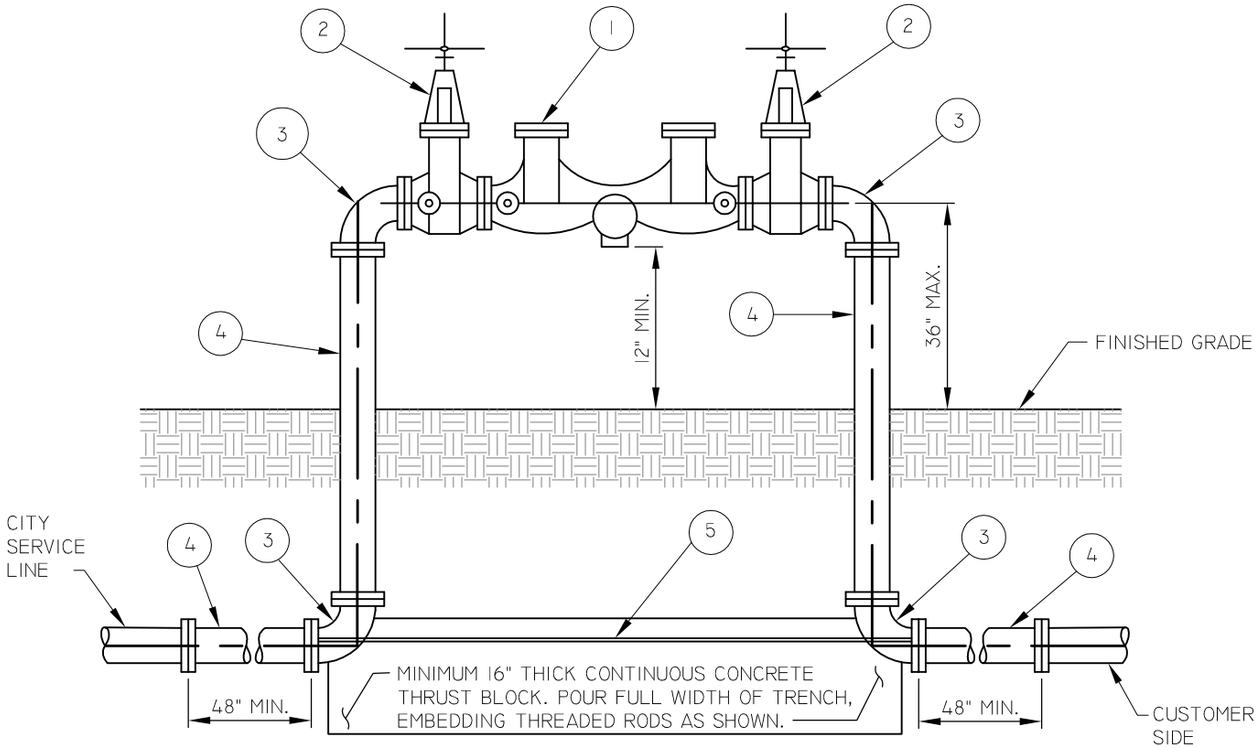

REDUCED PRESSURE PRINCIPLE BACKFLOW PREVENTION ASSEMBLY

LIST OF MATERIALS

1. APPROVED REDUCED PRESSURE PRINCIPLE BACKFLOW PREVENTION ASSEMBLY.
2. RESILIENT SEATED GATE VALVE. O.S. & Y. (FIRE LINE CONNECTION) N.R.S. (NON FIRE LINE)
3. 90° ELL. FLANGED D.I.P. 2 1/2" THROUGH 10"
4. PIPE SPOOL. FLANGED D.I.P. 2 1/2" THROUGH 10"
5. ZINC COATED THREADED STEEL ROD, BOLT TO FLANGES AS SHOWN, TYPICAL BOTH SIDES. ROD DIAMETER TO MATCH NOMINAL BOLT DIAMETER FOR CONNECTING FLANGES.

NOTES

1. CONTACT CITY OF MESA, WATER QUALITY SERVICES FOR LATEST LIST OF APPROVED BACKFLOW PREVENTERS OR CERTIFIED TESTERS.
2. THE REQUIRED BACKFLOW PREVENTION ASSEMBLY SHALL BE A MANUFACTURER AND MODEL NUMBER DESIGNATED IN THE CURRENT CITY OF MESA LIST OF APPROVED BACKFLOW PREVENTION ASSEMBLIES.
3. THE BACKFLOW PREVENTION ASSEMBLY SHALL BE TESTED AND APPROVED BY A CERTIFIED TECHNICIAN DESIGNATED IN THE CURRENT CITY OF MESA LIST OF APPROVED INSPECTORS PRIOR TO THE REQUEST FOR FINAL INSPECTION.
4. BACKFLOW PREVENTERS SHALL BE PAINTED LIGHT TAN OR A COLOR TO MATCH THE BUILDING. DO NOT PAINT THE NAME PLATE OR ANY BRASS PARTS OF THE ASSEMBLY.
5. INSTALL BRASS PIPE PLUG IN EACH TESTCOCK ON THE ASSEMBLY.
6. ALL BACKFLOW PREVENTERS SHALL BE PROTECTED BY GUARD POSTS. SEE COM DETAIL M-32.
7. FINISHED GRADE UNDER THE BACKFLOW PREVENTER SHALL BE COMPACTED TO 95% OF MAXIMUM DENSITY.
8. BACKFLOW PREVENTERS ON FIRE LINES MAY REQUIRE TAMPER SWITCHES ON THE SHUT OFF VALVES. CONTACT CITY OF MESA FIRE PREVENTION FOR SPECIFIC REQUIREMENTS.
9. PROVIDE 24-INCH MINIMUM CLEARANCE BETWEEN BACKFLOW PREVENTION ASSEMBLY AND PERMANENT STRUCTURES.
10. THIS DETAIL IS INTENDED FOR HIGH HAZARD DOMESTIC AND LANDSCAPE SERVICE PROTECTION. IT ALSO APPLIES TO DEDICATED FIRELINES WITH CHEMICAL ADDITIVES, AUXILIARY WATER OR STORAGE TANK CONNECTIONS, OR A SYSTEM EQUIPPED WITH BOOSTER PUMPS THAT OPERATE AGAINST THE BACKFLOW ASSEMBLY.
11. SCREENING SHALL BE AS REQUIRED BY CITY OF MESA. (NOT SHOWN)

NOT TO SCALE

mesa·az

REDUCED PRESSURE PRINCIPLE BACKFLOW PREVENTION ASSEMBLY, 2 1/2" AND LARGER

DETAIL NO. M-31.01

REV. 04/06/2015

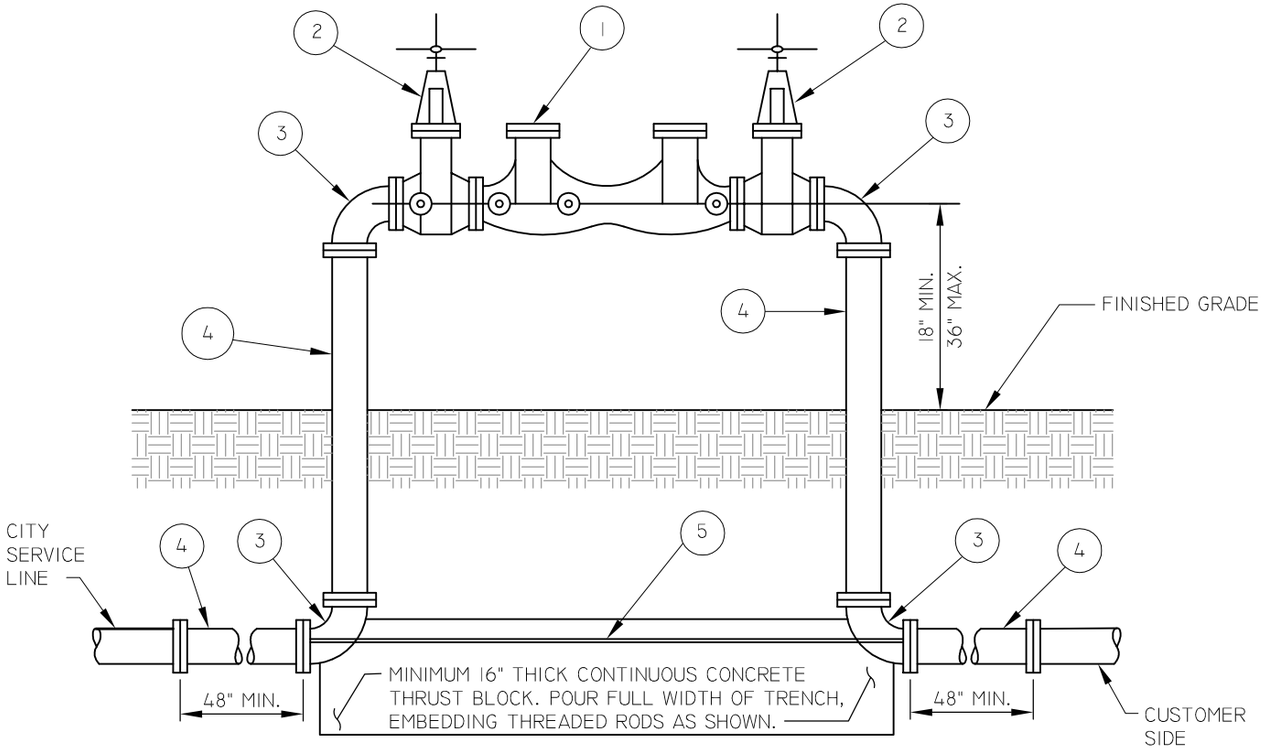

DOUBLE CHECK VALVE BACKFLOW PREVENTION ASSEMBLY

LIST OF MATERIALS

1. APPROVED DOUBLE CHECK VALVE BACKFLOW PREVENTION ASSEMBLY.
2. RESILIENT SEATED GATE VALVE. O.S. & Y. (FIRE LINE CONNECTION) N.R.S. (NON FIRE LINE)
3. 90° ELL. FLANGED D.I.P. 2 1/2" THROUGH 10"
4. PIPE SPOOL. FLANGED D.I.P. 2 1/2" THROUGH 10"
5. ZINC COATED THREADED STEEL ROD, BOLT TO FLANGES AS SHOWN, TYPICAL BOTH SIDES. ROD DIAMETER TO MATCH NOMINAL BLOT DIAMETER FOR CONNECTING FLANGES.

NOTES

1. CONTACT CITY OF MESA, WATER QUALITY SERVICES FOR THE LATEST LIST OF APPROVED BACKFLOW PREVENTERS OR CERTIFIED TESTERS.
2. THE REQUIRED BACKFLOW PREVENTION ASSEMBLY SHALL BE A MANUFACTURER AND MODEL NUMBER DESIGNATED IN THE CURRENT CITY OF MESA LIST OF APPROVED BACKFLOW PREVENTION ASSEMBLIES.
3. THE BACKFLOW PREVENTION ASSEMBLY SHALL BE TESTED AND APPROVED BY A CERTIFIED TECHNICIAN DESIGNATED IN THE CURRENT CITY OF MESA LIST OF APPROVED INSPECTORS PRIOR TO THE REQUEST FOR FINAL INSPECTION.
4. BACKFLOW PREVENTERS SHALL BE PAINTED LIGHT TAN OR A COLOR TO MATCH THE BUILDING. DO NOT PAINT THE NAME PLATE OR ANY BRASS PARTS OF THE ASSEMBLY.
5. INSTALL A BRASS PIPE PLUG IN EACH TESTCOCK ON THE ASSEMBLY.
6. ALL BACKFLOW PREVENTERS SHALL BE PROTECTED BY GUARD POSTS. SEE COM DETAIL M-32.
7. FINISHED GRADE UNDER THE BACKFLOW PREVENTER SHALL BE COMPACTED TO 95% OF MAXIMUM DENSITY.
8. BACKFLOW PREVENTERS ON FIRE LINES MAY REQUIRE TAMPER SWITCHES ON THE SHUT OFF VALVES. CONTACT CITY OF MESA FIRE PREVENTION FOR SPECIFIC REQUIREMENTS.
9. PROVIDE 12-INCH MINIMUM CLEARANCE BETWEEN BACKFLOW PREVENTION ASSEMBLY AND PERMANENT STRUCTURES.
10. THIS DETAIL IS INTENDED FOR LOW HAZARD DOMESTIC SERVICE PROTECTION. ON WATER SERVICES USED STRICTLY FOR FIRE PROTECTION, PREFERENCE SHOULD BE GIVEN TO A SINGLE CHECK INSTALLED ON THE FIRE RISER PER COM DETAIL M-31.06.
11. SCREENING SHALL BE AS REQUIRED BY CITY OF MESA. (NOT SHOWN)

NOT TO SCALE

mesa·az

DOUBLE CHECK VALVE BACKFLOW PREVENTION ASSEMBLY, 2 1/2" INCHES AND LARGER

DETAIL NO. M-31.02

REV. 04/06/2015

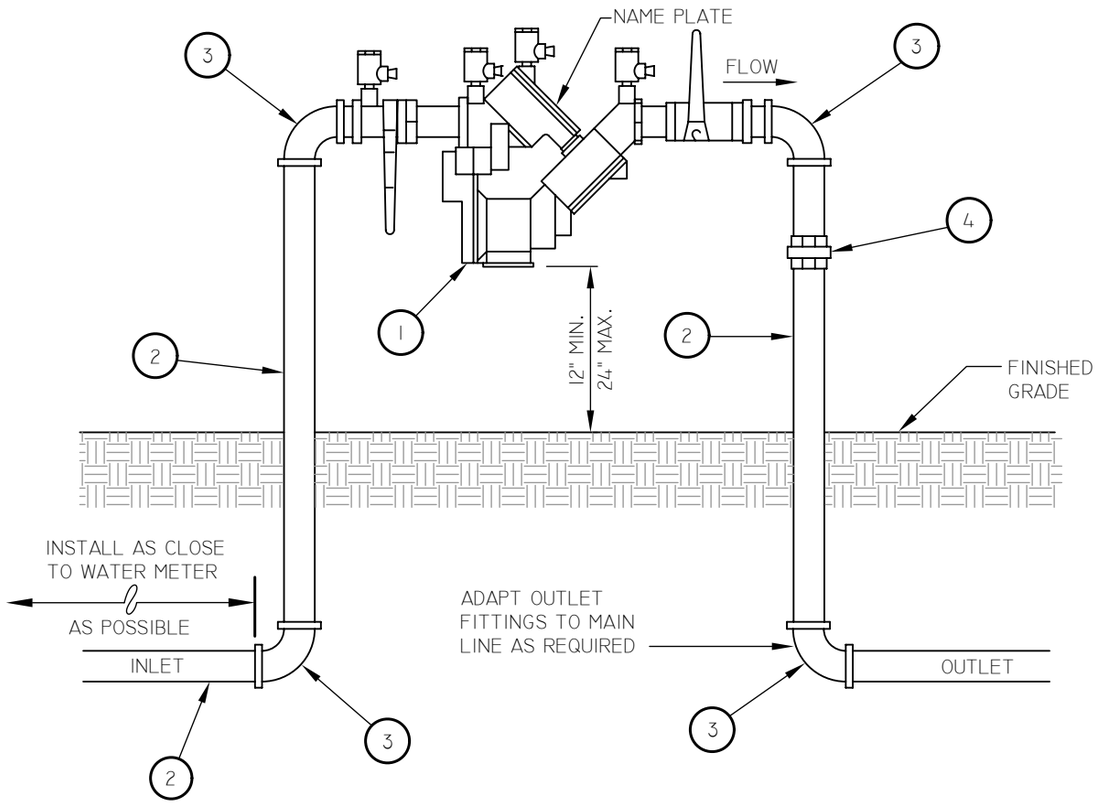

REDUCED PRESSURE PRINCIPLE BACKFLOW PREVENTION ASSEMBLY

LIST OF MATERIALS

1. APPROVED REDUCED PRESSURE PRINCIPLE BACKFLOW PREVENTION ASSEMBLY, BALL VALVES INCLUDED
2. TYPE "L" COPPER PIPE, 3/4" THROUGH 2"
3. 90° ELL, COPPER, 3/4" THROUGH 2"
4. PIPE UNION, BRASS OR COPPER

NOTES

1. CONTACT CITY OF MESA, WATER QUALITY SERVICES FOR LATEST LIST OF APPROVED BACKFLOW PREVENTERS OR CERTIFIED TESTERS.
2. THE REQUIRED BACKFLOW PREVENTION ASSEMBLY SHALL BE A MANUFACTURER AND MODEL NUMBER DESIGNATED IN THE CURRENT CITY OF MESA LIST OF APPROVED BACKFLOW PREVENTION ASSEMBLIES.
3. THE BACKFLOW PREVENTION ASSEMBLY SHALL BE TESTED AND APPROVED BY A CERTIFIED TECHNICIAN DESIGNATED IN THE CURRENT CITY OF MESA LIST OF APPROVED INSPECTORS PRIOR TO THE REQUEST FOR FINAL INSPECTION.
4. ALL COPPER PIPE JOINTS SHALL BE SOLDERED. THE SOLDERED ALLOY SHALL COMPLY W/ASTM B 32 HAVING A SILVER CONTENT OF NOT LESS THAN 3.4% INTENDED FOR JOINING COPPER PIPES FOR POTABLE WATER SYSTEMS (GRADES SN 94, SN 95, OR SN 96). THE FLUX SHALL BE TYPE OA FOR GENERAL SOLDERING ON COPPER.
5. INSTALL A BRASS PIPE PLUG IN EACH TESTCOCK ON THE ASSEMBLY.
6. FINISHED GRADE UNDER THE BACKFLOW PREVENTER SHALL BE COMPACTED TO 95% OF MAXIMUM DENSITY.
7. PROVIDE 12-INCH MINIMUM CLEARANCE BETWEEN BACKFLOW PREVENTION ASSEMBLY AND PERMANENT STRUCTURES OR LANDSCAPE VEGETATION.
8. FOR OUTSIDE INSTALLATIONS, BACKFLOW PREVENTER AND COPPER PIPE SHALL BE PAINTED DARK GREEN. THE NAME PLATE IS NOT TO BE PAINTED.
9. BACKFLOW ASSEMBLIES INSTALLED ON A CONCRETE PAD WILL HAVE THE COPPER PIPE WRAPPED OR SLEEVED WHERE IT PENETRATES THE CONCRETE.
10. SCREENING SHALL BE AS REQUIRED BY CITY OF MESA. (NOT SHOWN)

NOT TO SCALE

mesa·az

REDUCED PRESSURE PRINCIPLE BACKFLOW PREVENTION ASSEMBLY, 2" AND LESS

DETAIL NO. M-31.03

REV. 1/31/2014

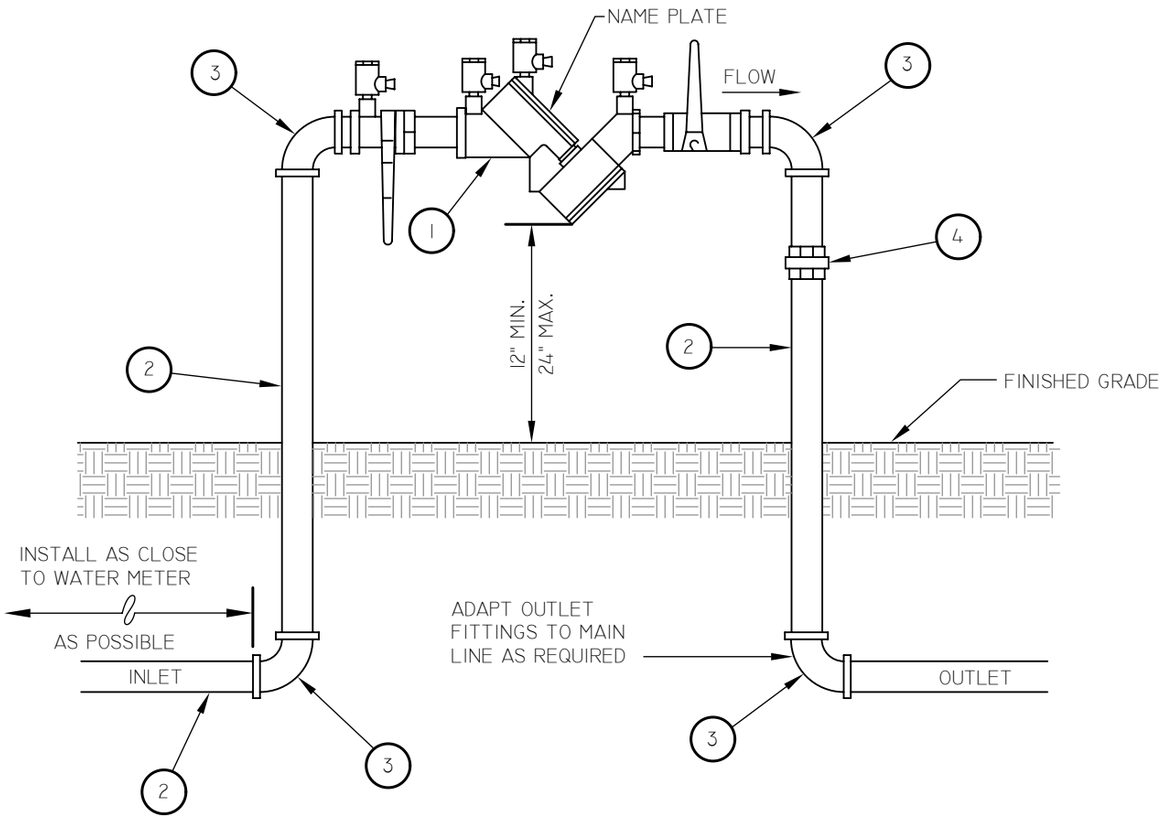

DOUBLE CHECK VALVE BACKFLOW PREVENTION ASSEMBLY

LIST OF MATERIALS

1. APPROVED DOUBLE CHECK VALVE BACKFLOW PREVENTION ASSEMBLY, BALL VALVES INCLUDED
2. TYPE "L" COPPER PIPE, 3/4" THROUGH 2"
3. 90° ELL, COPPER, 3/4" THROUGH 2"
4. PIPE UNION, BRASS OR COPPER

NOTES

1. CONTACT CITY OF MESA, WATER QUALITY SERVICES FOR THE LATEST LIST OF APPROVED BACKFLOW PREVENTERS OR CERTIFIED TESTERS.
2. THE REQUIRED BACKFLOW PREVENTION ASSEMBLY SHALL BE A MANUFACTURER AND MODEL NUMBER DESIGNATED IN THE CURRENT CITY OF MESA LIST OF APPROVED BACKFLOW PREVENTION ASSEMBLIES.
3. THE BACKFLOW PREVENTION ASSEMBLY SHALL BE TESTED AND APPROVED BY A CERTIFIED TECHNICIAN DESIGNATED IN THE CURRENT CITY OF MESA LIST OF APPROVED INSPECTORS PRIOR TO THE REQUEST FOR FINAL INSPECTION.
4. ALL COPPER PIPE JOINTS SHALL BE SOLDERED. THE SOLDER ALLOY SHALL COMPLY W/ASTM B 32 HAVING A SILVER CONTENT OF NOT LESS THAN 3.4% INTENDED FOR JOINING COPPER PIPES FOR POTABLE WATER SYSTEMS (GRADES SN 94, SN 95, OR SN 95). THE FLUX SHALL BE TYPE OA FOR GENERAL SOLDERING ON COPPER.
5. INSTALL A BRASS PIPE PLUG IN EACH TESTCOCK ON THE ASSEMBLY.
6. FINISHED GRADE UNDER THE BACKFLOW PREVENTER SHALL BE COMPACTED TO 95% OF MAXIMUM DENSITY.
7. PROVIDE 12-INCH MINIMUM CLEARANCE BETWEEN BACKFLOW PREVENTION ASSEMBLY AND PERMANENT STRUCTURES OR LANDSCAPE VEGETATION.
8. FOR OUTSIDE INSTALLATIONS, BACKFLOW PREVENTER AND COPPER PIPE SHALL BE PAINTED DARK GREEN. THE DEVICE NAME IS NOT TO BE PAINTED.
9. BACKFLOW ASSEMBLIES INSTALLED ON A CONCRETE PAD WILL HAVE THE COPPER PIPE WRAPPED OR SLEEVED WHERE IT PENETRATES THE CONCRETE.
10. SCREENING SHALL BE AS REQUIRED BY CITY OF MESA PLANNING DIVISION. (NOT SHOWN)

NOT TO SCALE

mesa·az

DOUBLE CHECK VALVE BACKFLOW PREVENTION ASSEMBLY, 2" AND LESS

DETAIL NO.
M-31.04

REV. 1/31/2014

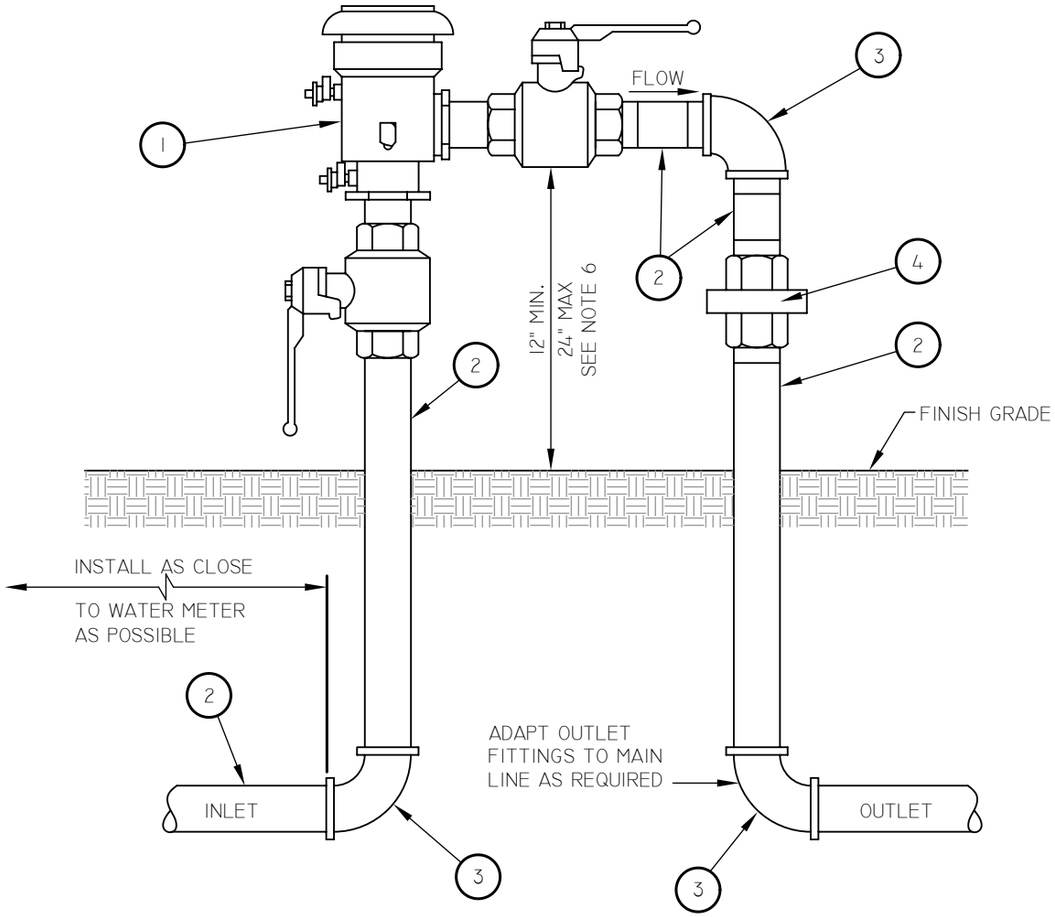

PRESSURE VACUUM BREAKER ASSEMBLY

LIST OF MATERIALS

1. APPROVED PRESSURE VACUUM BREAKER ASSEMBLY, BALL VALVES INCLUDED.
2. TYPE "L" COPPER PIPE, 3/4" THROUGH 2".
3. 90° ELL, COPPER, 3/4" THROUGH 2".
4. PIPE UNION, BRASS OR COPPER

NOTES

1. CONTACT CITY OF MESA, WATER QUALITY SERVICES FOR LATEST LIST OF APPROVED BACKFLOW PREVENTERS OR CERTIFIED TESTERS.
2. THE REQUIRED BACKFLOW PREVENTION ASSEMBLY SHALL BE A MANUFACTURER AND MODEL NUMBER DESIGNATED IN THE CURRENT CITY OF MESA LIST OF APPROVED BACKFLOW PREVENTION ASSEMBLIES.
3. THE BACKFLOW PREVENTION ASSEMBLY SHALL BE TESTED AND APPROVED BY A CERTIFIED TECHNICIAN DESIGNATED IN THE CURRENT CITY OF MESA LIST OF APPROVED INSPECTORS PRIOR TO THE REQUEST FOR FINAL INSPECTION.
4. ALL COPPER PIPE JOINTS SHALL BE SOLDERED. THE SOLDER ALLOY SHALL COMPLY W/ASTM B 32 HAVING A SILVER CONTENT OF NOT LESS THAN 3.4% INTENDED FOR JOINING COPPER PIPES FOR POTABLE WATER SYSTEMS (GRADES SN 94, SN 95, AND SN 96). THE FLUX SHALL BE TYPE OA FOR GENERAL SOLDERING ON COPPER.
5. INSTALL A BRASS PIPE PLUG IN EACH TESTCOCK ON THE ASSEMBLY.
6. PRESSURE VACUUM BREAKERS MUST BE INSTALLED AT LEAST 12-INCHES ABOVE ALL DOWNSTREAM PIPING AND THE HIGHEST OUTLET ON THE SYSTEM. IF THIS DISTANCE EXCEEDS 24-INCHES, A REDUCED PRESSURE PRINCIPLE BACKFLOW PREVENTION ASSEMBLY MUST BE UTILIZED. SEE COM DETAIL M-31.03.
7. FINISHED GRADE UNDER THE BACKFLOW PREVENTER SHALL BE COMPACTED TO 95% OF MAXIMUM DENSITY.
8. PROVIDE 12-INCH MINIMUM CLEARANCE BETWEEN BACKFLOW PREVENTION ASSEMBLY AND PERMANENT STRUCTURES OR LANDSCAPE VEGETATION.
9. FOR OUTSIDE INSTALLATIONS, BACKFLOW PREVENTER AND COPPER PIPE SHALL BE PAINTED DARK GREEN. THE DEVICE NAME IS <u>NOT</u> TO BE PAINTED.
10. BACKFLOW ASSEMBLIES INSTALLED ON A CONCRETE PAD WILL HAVE THE COPPER PIPE WRAPPED OR SLEEVED WHERE IT PENETRATES THE CONCRETE.
11. SCREENING SHALL BE AS REQUIRED BY CITY OF MESA PLANNING DIVISION. (NOT SHOWN)

NOT TO SCALE

mesa·az

PRESSURE VACUUM BREAKER ASSEMBLY, 2" AND LESS

DETAIL NO. M-31.05

REV. 1/31/2014

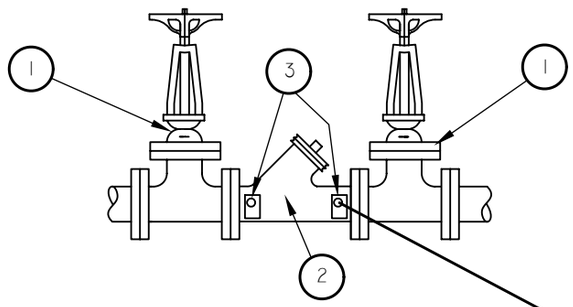

HORIZONTAL ORIENTATION

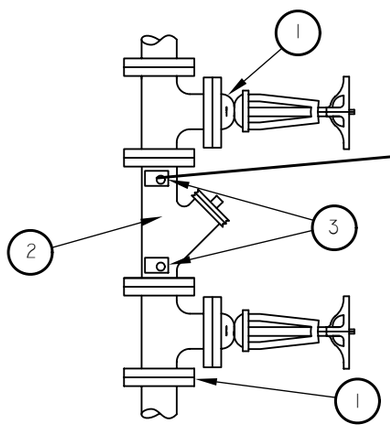

VERTICAL ORIENTATION

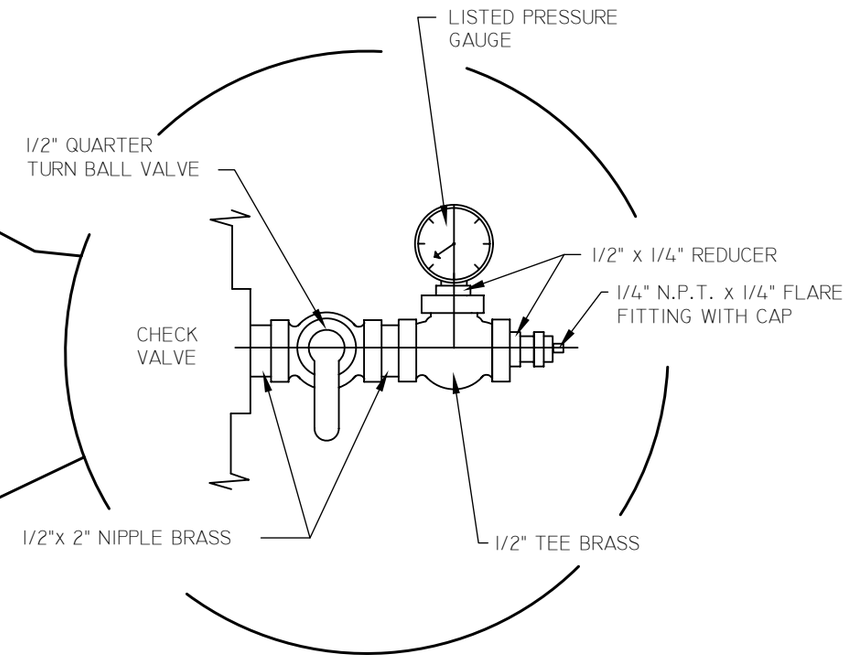

DETAIL A

NOTES

1. CHECK VALVE SHALL BE TESTED FOR PROPER OPERATION PER COM REQUIREMENTS BY A CERTIFIED TESTER RECOGNIZED BY THE CITY BEFORE A FINAL APPROVAL IS ISSUED.
2. CONTACT COM WATER QUALITY SERVICES FOR A CURRENT LIST OF CERTIFIED TESTERS.
3. CONTACT COM BUILDING SAFETY DIVISION, FIRE PLAN REVIEW FOR FIRE PREVENTION CODE REQUIREMENTS.
4. PROVIDE 12-INCH MINIMUM CLEARANCE BETWEEN CHECK VALVE PIPING & STRUCTURES.
5. LOCATION OF ASSEMBLY SHALL BE AS APPROVED BY BUILDING INSPECTIONS.
6. ASSEMBLIES NOT INSTALLED WITHIN A BUILDING SHALL BE PRIMED AND PAINTED LIGHT TAN OR A COLOR TO MATCH THE BUILDING OR SURROUNDINGS. DO NOT PAINT THE DEVICE NAME OR ANY BRASS PARTS OF THE ASSEMBLY.
7. THIS DETAIL IS SPECIFICALLY DESIGNED FOR FIRE RISER APPLICATION. WHERE THE FIRE DEPARTMENT CONNECTION (FDC) IS LOCATED CURBSIDE OR IN A REMOTE LOCATION, THIS DETAIL MAY BE APPLIED OUTSIDE WITH THE FDC INSTALLED IMMEDIATELY DOWNSTREAM.
8. THIS DETAIL DOES NOT APPLY TO FIRE SYSTEMS THAT USE ADDITIVES, HAVE CONNECTIONS TO AUXILIARY WATER; OR STORAGE TANKS, OR EQUIPPED WITH BOOSTER PUMPS THAT OPERATE AGAINST THE CHECK VALVE. A FIRE SYSTEM OF THIS TYPE MAY REQUIRE THE INSTALLATION OF A DOUBLE CHECK OR REDUCED PRESSURE BACKFLOW ASSEMBLY.

LIST OF MATERIALS

1. APPROVED RESILIENT SEATED INDICATING SHUT OFF VALVE (2 REQUIRED) U.L. LISTED OR FM APPROVED FOR USE ON FIRE PROTECTION SYSTEMS.
2. APPROVED RESILIENT SEATED, INTERNALLY SPRING-LOADED CHECK VALVE (FEBCO 800, AMES 1000, OR WILKINS 310 OR EQUIVALENT) U.L. LISTED AND APPROVED FOR USE ON FIRE PROTECTION SYSTEMS.
3. LISTED PRESSURE GAUGE AND APPROVED TEST COCK PIPING (2 REQUIRED) (SEE DETAIL A)

NOT TO SCALE

mesa·az

CHECK VALVE ASSEMBLIES FOR FIRE PROTECTION SYSTEMS

DETAIL NO. M-31.06

REV. 1/31/2014

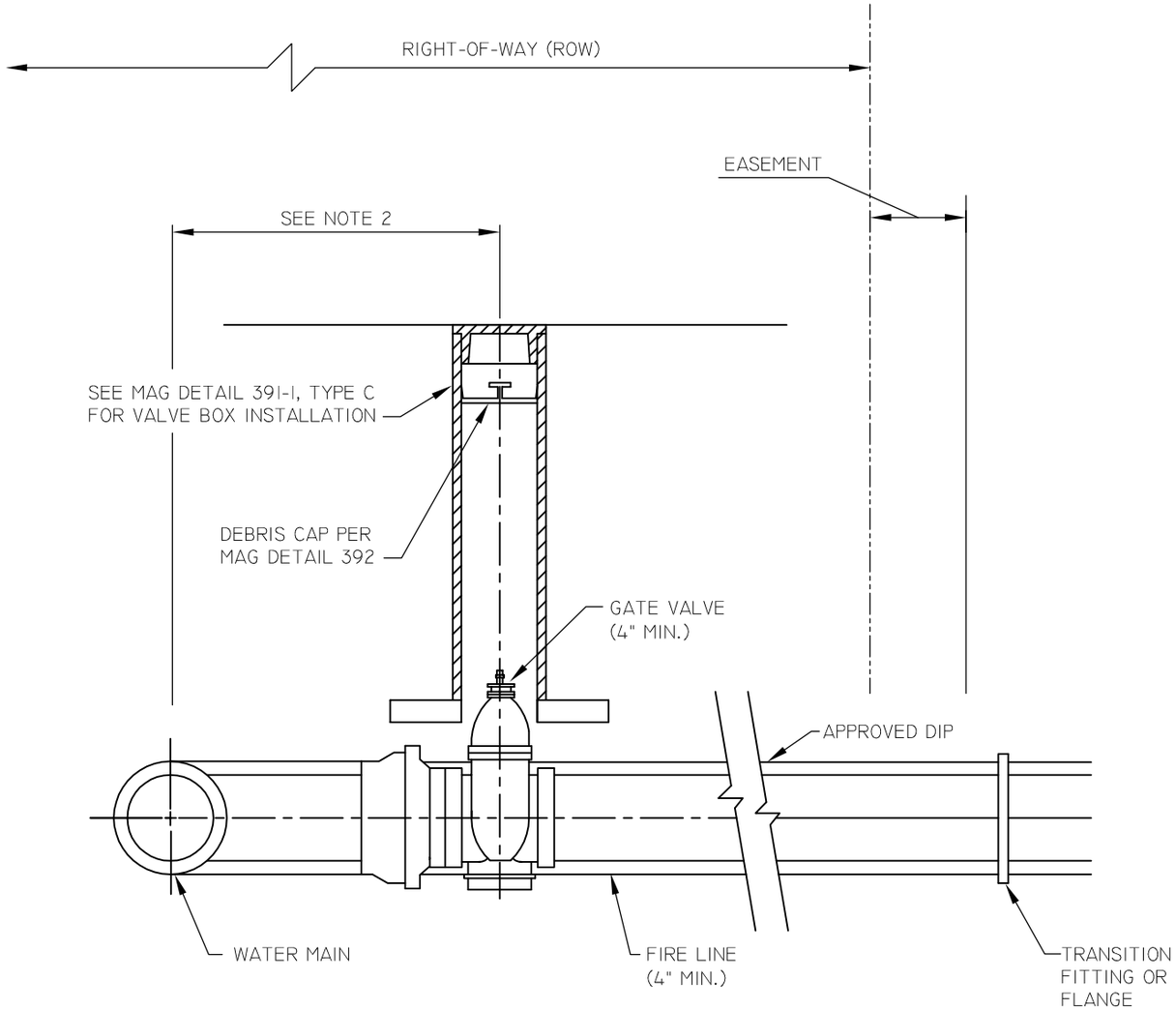

NOTES

1. AN APPROVED VALVE BOX ASSEMBLY WITH "DEBRIS CAP" SHALL BE INSTALLED ON ALL FIRE LINES PER MAG DETAIL 391-1, TYPE C. SEE WATER RESOURCES APPROVED PRODUCTS LIST FOR APPROVED VALVES AND VALVE BOXES (WWW.MESAAZ.GOV/ENGNEERING)

2. VALVES SHALL BE INSTALLED AS NEAR AS PRACTICAL TO POINT OF TAKE-OFF FROM MAIN.

3. VALVES SHALL MEET OR EXCEED REQUIREMENTS OF MAG SECTION 630 AS AMENDED BY THE CITY OF MESA AND SHALL HAVE A MINIMUM WORKING PRESSURE RATING OF 200 PSIG. VALVE SHALL BE A GATE VALVE WITH A 2" SQUARE OPERATING NUT AND DESIGNED TO PREVENT CLOSURE IN LESS THAN FIVE (5) SECONDS FROM FULL OPEN POSITION.

4. VALVES SHALL BE SAME SIZE AS FIRE LINE. IN NO CASE SHALL THE VALVE BE SMALLER THAN 4". ON FIRE LINES SMALLER THAN 4", THE LINE SHALL NOT BE REDUCED TO SMALLER THAN 4" UNTIL BEYOND THE RIGHT-OF-WAY OR EASEMENT IF AN EASEMENT EXISTS.

5. THE PORTION OF FIRE LINE LOCATED IN AN EASEMENT OR ROW SHALL BE APPROVED DIP ONLY. OWNER MAY INSTALL OTHER SUITABLE FIRE LINE MATERIALS APPROVED BY THE BUILDING SAFETY DEPT. FOR LINE BEYOND EASEMENT OR ROW. IN THIS CASE, AN APPROVED TRANSITION FITTING OR FLANGE SHALL BE INSTALLED BEYOND THE ROW OR EASEMENT IF AN EASEMENT EXISTS. DIP PIPE AND FITTINGS SHALL BE PER WATER RESOURCES APPROVED PRODUCTS LIST (WWW.MESAAZ.GOV/ENGINEERING)

6. OWNER OF FIRE LINE SHALL BE RESPONSIBLE FOR LOCATING, REPAIRING, REPLACING, MOVING, OR MODIFYING TRANSITION FITTING AND ALL PIPING BEYOND THE EASEMENT OR ROW.

7. THE CITY SHALL BE RESPONSIBLE FOR LOCATING, REPAIRING, REPLACING, MOVING, OR MODIFYING THE FIRE LINE AND ANY FIRE HYDRANTS LOCATED IN THE EASEMENT OR ROW.

NOT TO SCALE

mesa·az

FIRE LINES TO PRIVATE PROPERTY

DETAIL NO.
M-31.07

REV. 01/29/2015

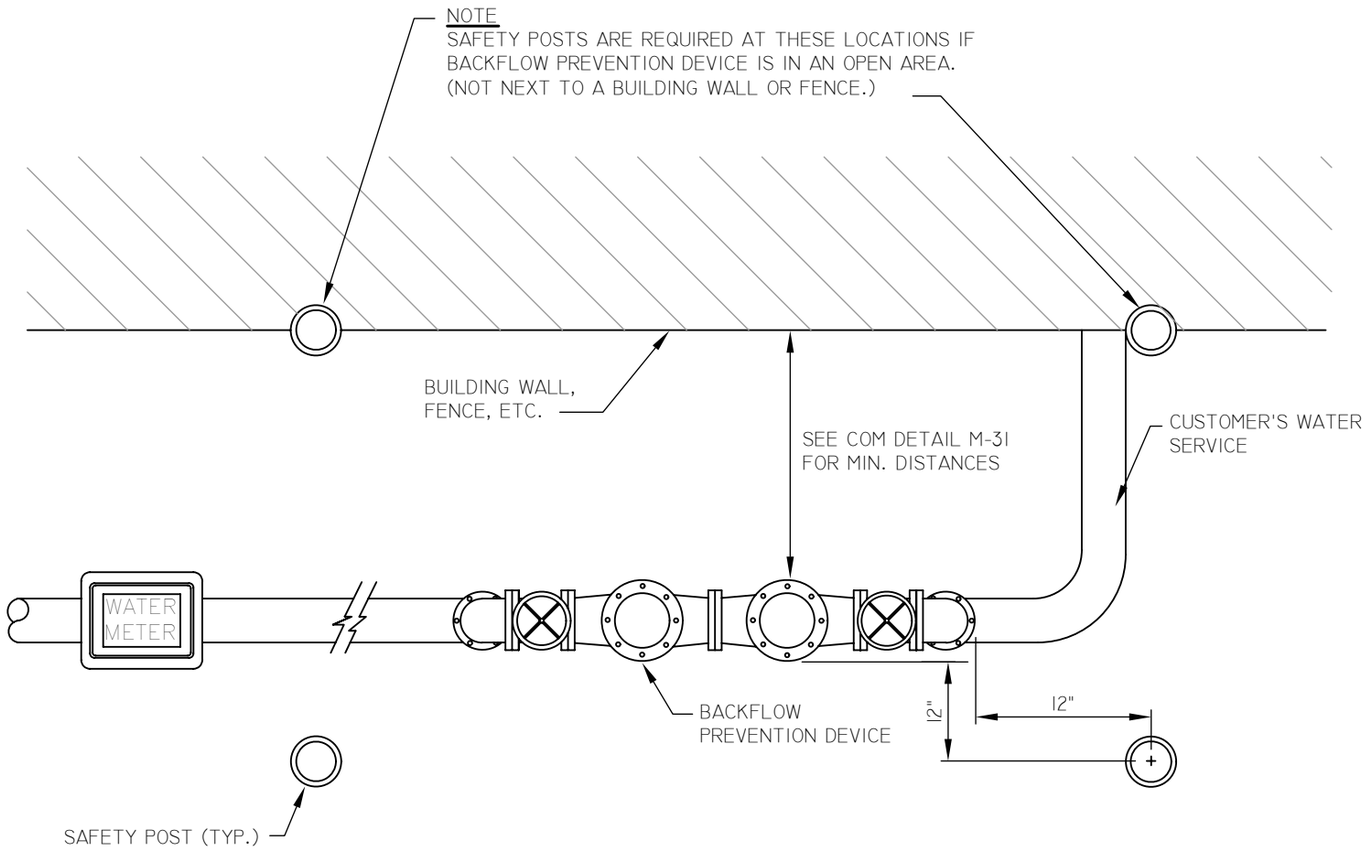

SAFETY POST FOR BACKFLOW PREVENTION DEVICES
PLAN VIEW

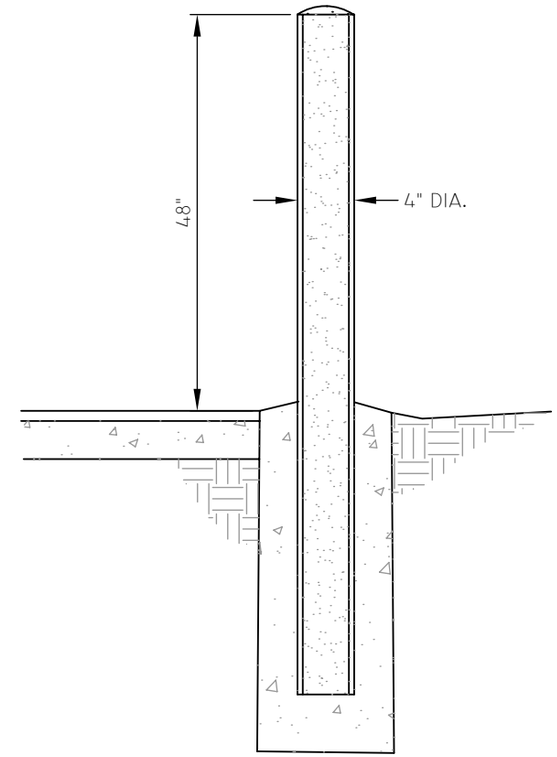

SAFETY POST PER MAG DETAIL 140
EXCEPT AS NOTED ABOVE

NOT TO SCALE

GUARD POST FOR BACKFLOW PREVENTION DEVICES

DETAIL NO.
M-32

REV. 1/31/2014

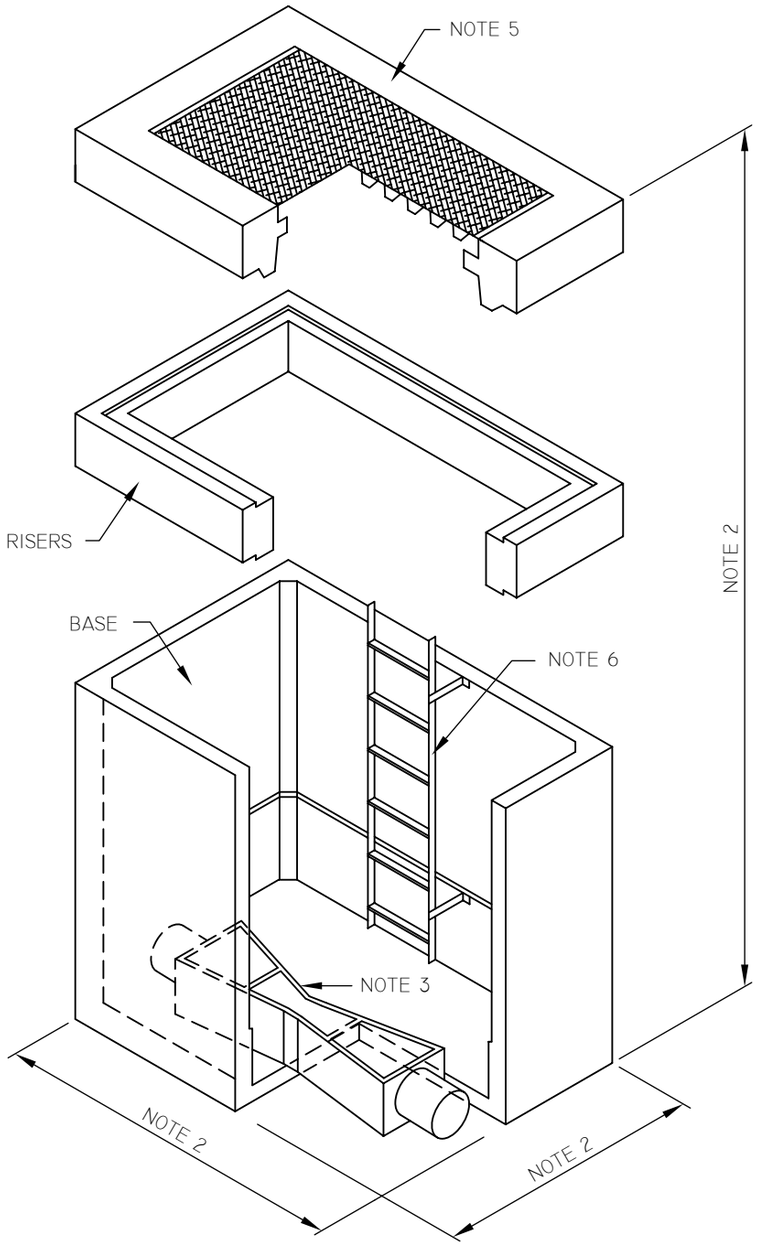

NOTES

1. VAULT SHALL BE INSTALLED ONLY IN NON-TRAFFIC AREAS.
2. THE SIZE OF THE VAULT SHALL BE DETERMINED BY THE SIZE OF THE PRIMARY MEASURING DEVICE.
3. THE SELECTION OF TYPE AND SIZE OF A PRIMARY MEASURING DEVICE SHALL BE APPROVED BY THE CITY OF MESA INDUSTRIAL PRETREATMENT SECTION.
4. VAULT SHALL BE A PRE-CAST CONCRETE FLUME VAULT BY UTILITY VAULT CO., SMITH PRECAST, OR EQUAL. LIFTING INSERTS AND ACCESS DOORS INSTALLED BY PRE-CAST MANUFACTURER.
5. ACCESS DOORS SHALL BE HINGED, FLUSH MOUNTED WITH RECESSED LIFTING HANDLES AND SHALL HAVE PENTAHEAD LOCKING BOLTS WITH A RECESSED AREA FOR SECURING THE VAULT WITH A PADLOCK AND SHALL BE TORSION ASSISTED. THE ACCESS DOORS SHALL HAVE A CLEAR OPENING OF NOT LESS THAN 36" X 60".
6. LADDER SHALL BE A MINIMUM OF 1.5 FEET WIDE. LADDER AND ALL LADDER HARDWARE SHALL BE FIBERGLASS OR STAINLESS STEEL.
7. WHEN REQUIRED FOR THE PURPOSE OF OBTAINING MONTHLY CITY OF MESA WASTEWATER SERVICE CHARGE INFORMATION, THE SECONDARY MEASURING DEVICE SHALL BE A MILLTRONIC OPEN CHANNEL MONITOR. MODEL TYPE TO BE APPROVED BY THE CITY OF MESA'S INDUSTRIAL PRETREATMENT SECTION.

NOT TO SCALE

mesa·az

FLUME VAULT STRUCTURE

DETAIL NO.
M-33

REV. 1/31/2014

NOTES

1. PVC TYPE COUPLINGS SHALL BE USED FOR ALL REPAIRS ON PVC SEWER LINES.
2. RUBBER TYPE COUPLINGS MAY BE USED ONLY WHEN REPAIRING OTHER TYPES OF SEWER LINES, SUCH AS CLAY, DUCTILE IRON, OR TRANSITIONS FROM PVC TO OTHER TYPE PIPE.
3. APPROVED GASKETED SEWER FITTINGS INCLUDE FERNCO AND MULTI FITTINGS, INC.
4. BACKFILL MATERIAL FROM THE BOTTOM OF THE EXCAVATION TO THE SPRING LINE OF THE PIPE SHALL BE PLACED TO PROVIDE FULL SUPPORT FOR THE PIPE. BACKFILL, WHETHER IMPORTED OR NATIVE, THAT IS USED FOR THIS PURPOSE SHALL BE GRANULAR PER MAG SECTION 601.4.6; BE PLACED AT A MOISTURE CONTENT SUCH THAT IT IS SEMI-FLOWABLE; BE LOW-SHRINK AND REQUIRE MINIMAL COMPACTION EFFORT. MATERIALS SUCH AS CONTROLLED LOW STRENGTH MATERIAL (CLSM) PER MAG SECTION 728, PORTLAND CEMENT PER MAG SECTION 725, ABC SLURRY, PEA GRAVEL, ETC. MAY BE USED.

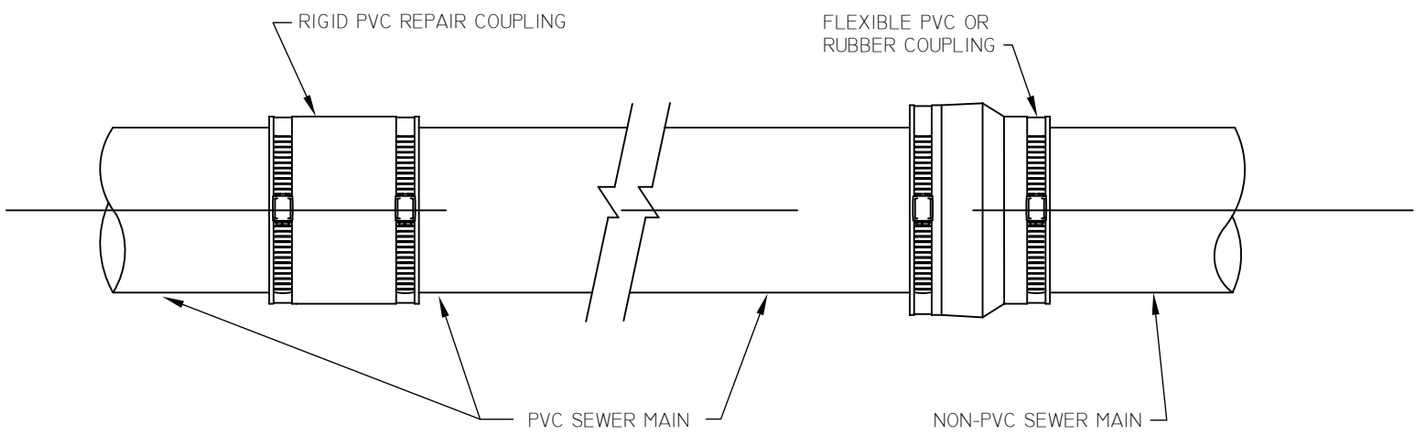

REPAIR COUPLINGS

NOT TO SCALE

mesa·az

GASKETED SEWER FITTINGS

DETAIL NO.
M-34

REV. 1/31/2014

NOTES

1. THIS CONTROL MANHOLE PLAN SHALL BE USED FOR 6" AND 8" DIAMETER SEWERS AND NOT EXCEED 0.8 CU FT PER SECOND FLOW. LARGER SEWERS REQUIRE SPECIAL DESIGN.

2. ONLY ONE INLET AND OUTLET PIPE SHALL BE CONSTRUCTED THROUGH CONTROL MANHOLE. THE NEAREST JUNCTION BETWEEN THE INLET PIPE AND OTHER CONNECTING SEWERS SHOULD BE LOCATED A MINIMUM OF SIX FEET UPSTREAM.

3. CONSTRUCT MANHOLE ON STRAIGHT RUN OF SEWER PIPE. FLOW SHALL BE STRAIGHT THROUGH AS SHOWN.

4. ALL MANHOLE CONSTRUCTION SHALL BE PER MAG DETAIL 420 AND 424 EXCEPT AS REQUIRED ON THIS DETAIL. ECCENTRIC CONICAL TOPS ARE ALLOWABLE.

5. WHEN THE INDUSTRIAL WASTE SECTION REQUIRES THE INSTALLATION OF A PRIMARY FLOW MEASUREMENT DEVICE, THE SELECTION OF THE TYPE OF FLUME MUST BE BASED ON THE EXISTING SITE CONFIGURATION, THE NATURE OF THE FLOW, AND THE RANGE OF EXPECTED FLOWS. DOCUMENTATION OF THE METHOD USED TO DETERMINE THE TYPE AND SIZE OF FLUME MUST BE SUBMITTED TO THE INDUSTRIAL WASTE SECTION FOR WRITTEN APPROVAL PRIOR TO CONSTRUCTION.

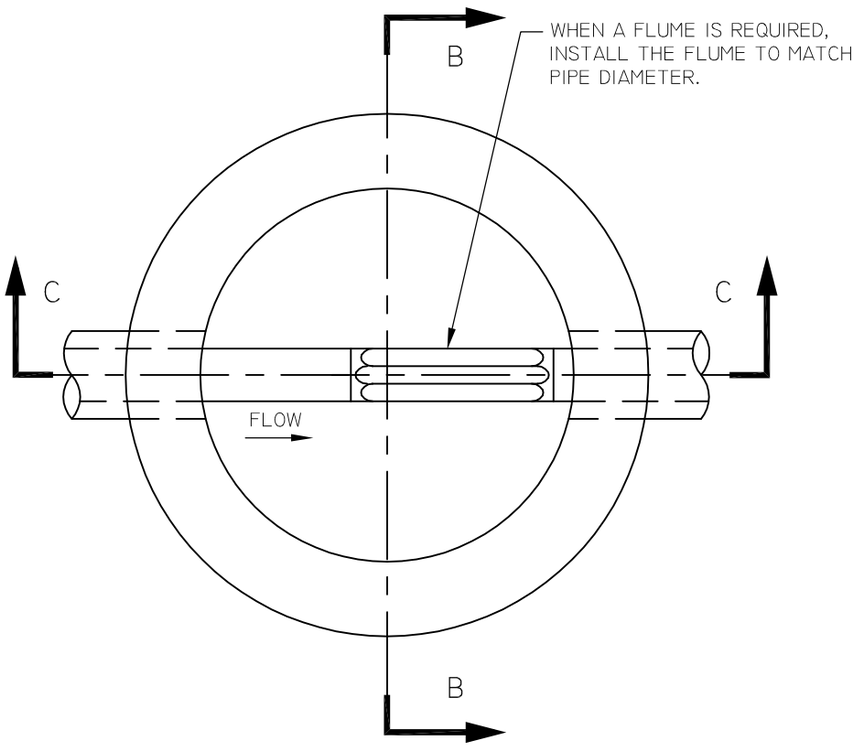

SECTION A-A

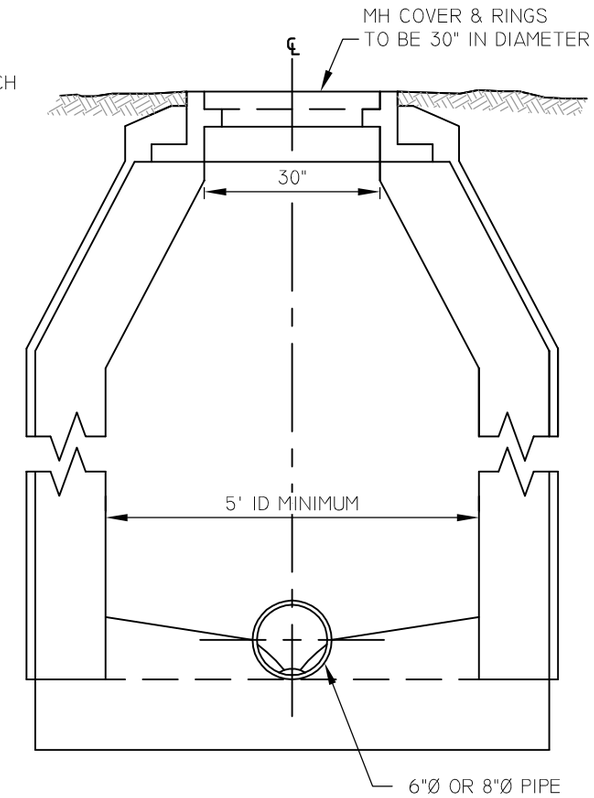

SECTION B-B

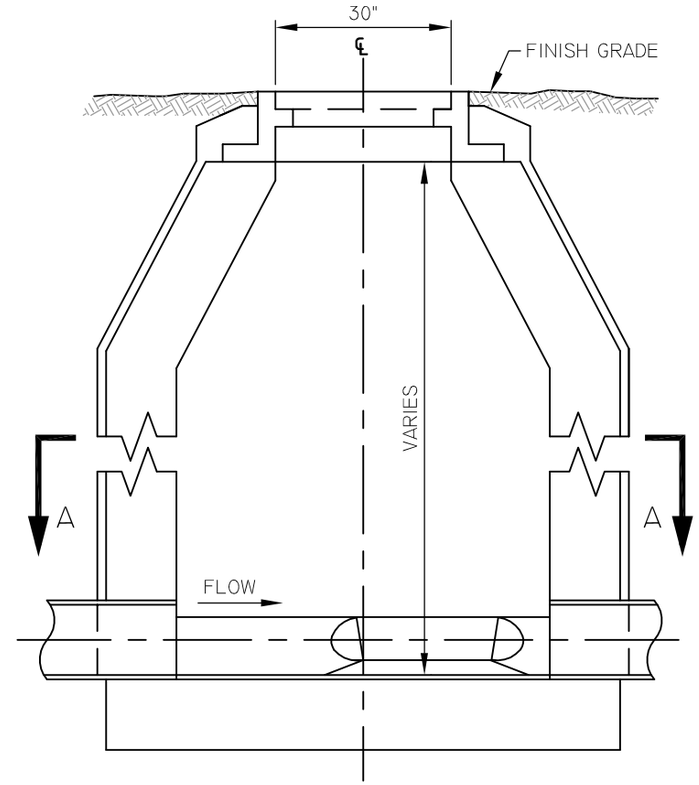

SECTION C-C

NOT TO SCALE

mesa·az

CONTROL MANHOLE

DETAIL NO. M-35

REV. 1/31/2014

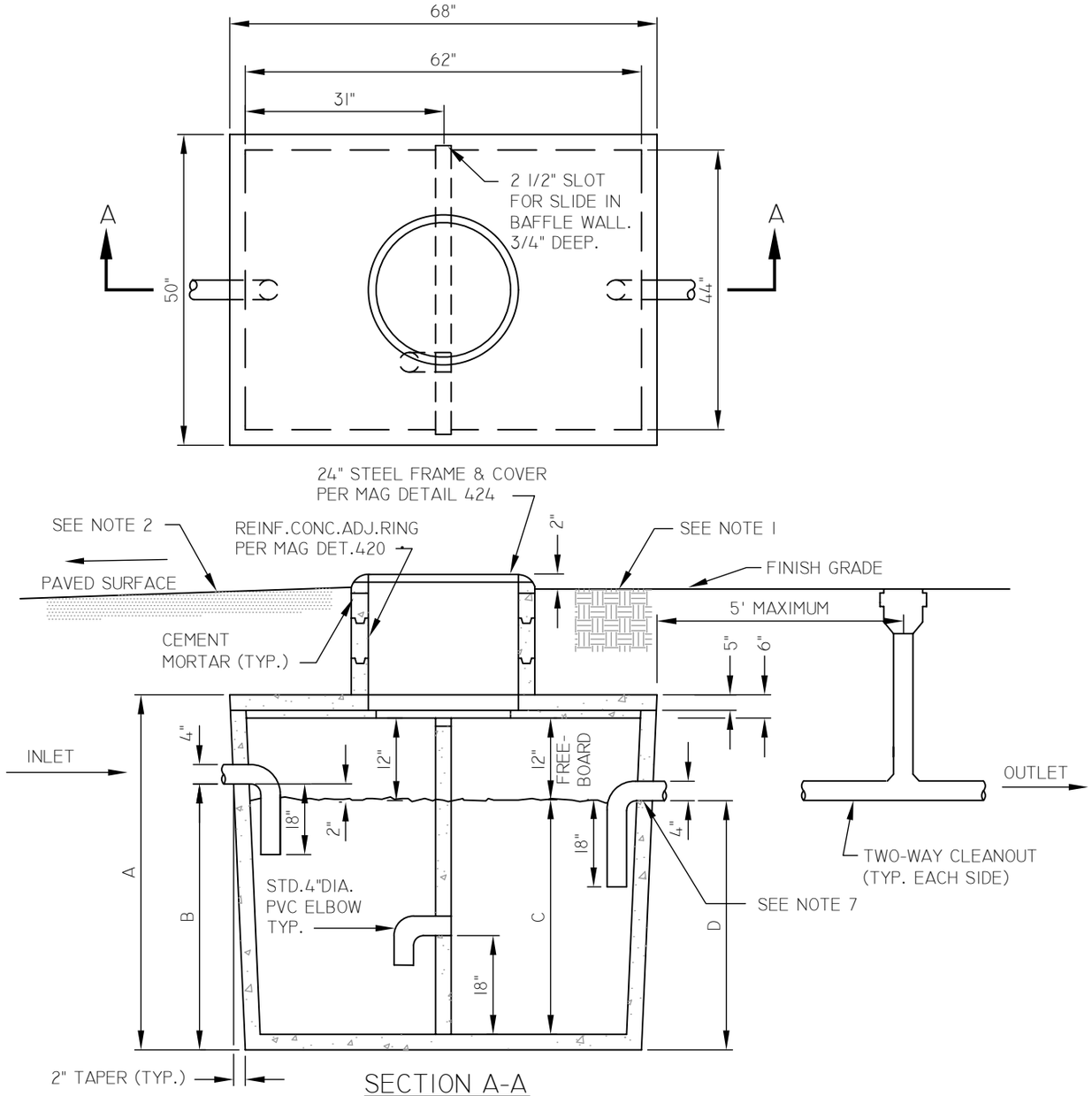

SECTION A-A

NOTES

1. WHEN INSTALLED IN UNPAVED AREAS, ELEVATE MANHOLE LID ABOVE SURROUNDING GRADE TO EXCLUDE SURFACE WATER. DO NOT INSTALL IN RETENTION OR WATER PONDING AREAS.
2. IF INSTALLED IN A PAVED OR CONCRETE AREA, SLOPE SURFACE AWAY FROM LID TO PROTECT AGAINST ENTRANCE OF SURFACE WATER.
3. NOT APPROVED FOR USE INSIDE AN ENCLOSED BUILDING. TANK MUST BE A MINIMUM OF 2-FEET OUTSIDE OF BUILDING FOUNDATION.
4. PRE-CAST TANK TO BE REINFORCED AS REQUIRED TO MEET STRUCTURAL REQUIREMENTS OF EACH SEPARATE INSTALLATION. AT A MINIMUM, DESIGN FOR H-20 LOADING.
5. INTERIOR OF TANK SHALL BE COATED WITH ASPHALT EMULSION.
6. EXCAVATION MUST ALLOW FOR 12" CLEARANCE AROUND TANK. EXCAVATION AND BACKFILL SHALL BE PER MAG SPEC SECTION 206.
7. INLET AND OUTLET MUST BE WATERTIGHT TO STRUCTURE.
8. THE FOLLOWING DIMENSIONS ARE THE MINIMUM ALLOWABLE FOR THIS TYPE OF WASTE INTERCEPTOR:

TANK SIZE	A	B	C	D
350 GAL.	58"	41"	35"	38"
500 GAL.	69"	54"	48"	51"

NOT TO SCALE

mesa·az

GREASE, OIL AND SAND INTERCEPTOR - SINGLE MANHOLE

DETAIL NO.
M-36.01.1

REV. 1/31/2014

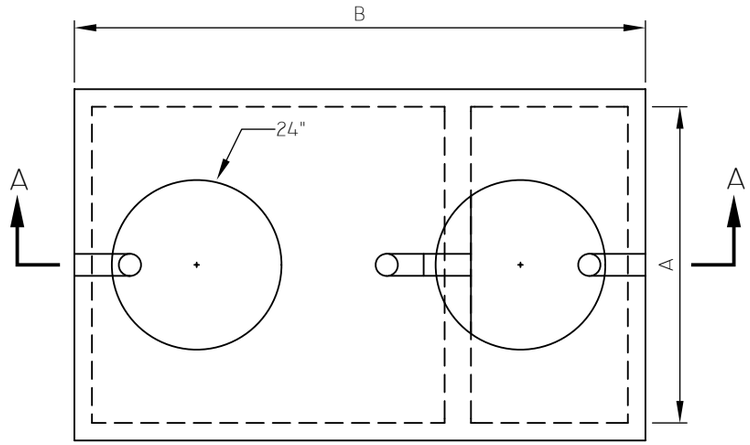

PLAN VIEW

(COVERS AND RINGS NOT SHOWN)

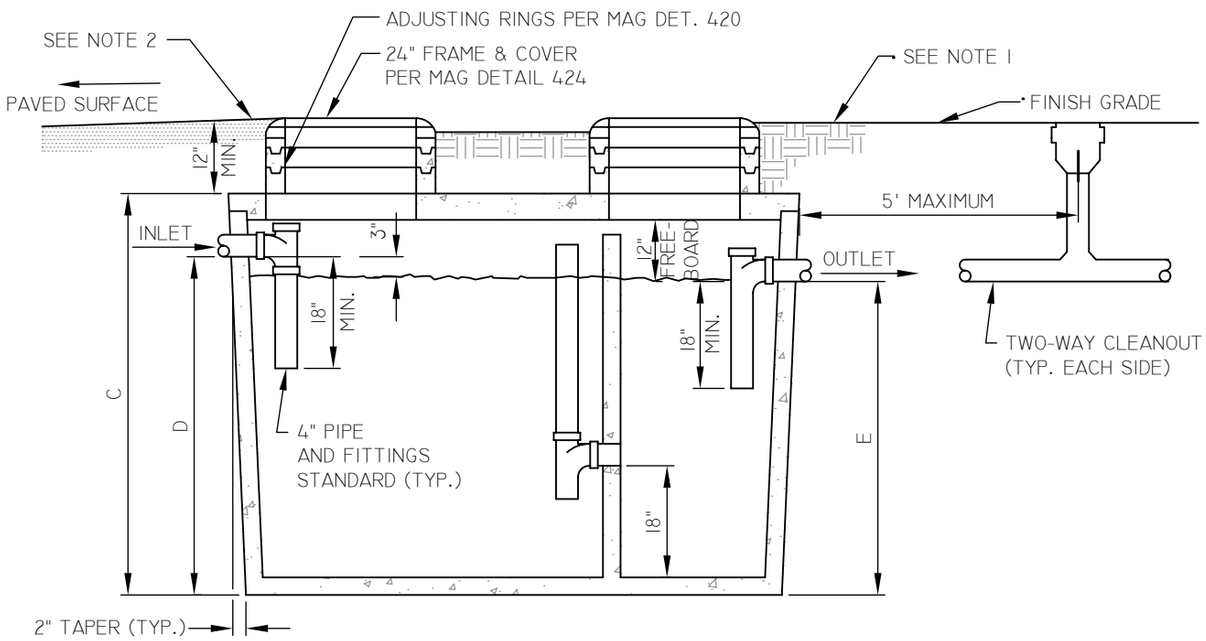

SECTION A-A

NOTES

1. WHEN INSTALLED IN UNPAVED AREAS, ELEVATE MANHOLE LIDS 2-INCHES MINIMUM ABOVE SURROUNDING GRADE TO EXCLUDE SURFACE WATER. DO NOT INSTALL IN RETENTION OR WATER-PONDING AREAS.
2. IF INSTALLED IN A PAVED OR CONCRETE AREA, SLOPE SURFACE AWAY FROM MANHOLE LIDS TO PROTECT AGAINST ENTRANCE OF SURFACE WATER.
3. NOT APPROVED FOR USE INSIDE AN ENCLOSED BUILDING. TANK MUST BE A MINIMUM OF 2-FEET OUTSIDE OF BUILDING FOUNDATION.
4. PRE-CAST TANK TO BE REINFORCED AS REQUIRED TO MEET STRUCTURAL REQUIREMENTS OF EACH SEPARATE INSTALLATION. AT A MINIMUM, DESIGN FOR H-20 LOADING.
5. INTERIOR OF TANK SHALL BE COATED WITH ASPHALT EMULSION.
6. EXCAVATION MUST ALLOW FOR 12" CLEARANCE AROUND TANK. EXCAVATION AND BACKFILL SHALL BE PER MAG SPEC SECTION 206.
7. INLET AND OUTLET MUST BE WATERTIGHT TO STRUCTURE.
8. THE FOLLOWING DIMENSIONS ARE THE MINIMUM ALLOWABLE FOR THIS TYPE OF WASTE INTERCEPTOR:

TANK SIZE	A	B	C	D	E
320 GAL.	3'-0"	7'-0"	4'-6"	3'-7"	3'-4"
500 GAL.	4'-0"	6'-0"	5'-10"	4'-10"	4'-7"

NOT TO SCALE

mesa·az

GREASE, OIL AND SAND INTERCEPTOR - TWO MANHOLES

DETAIL NO.
M-36.01.2

REV. 1/31/2014

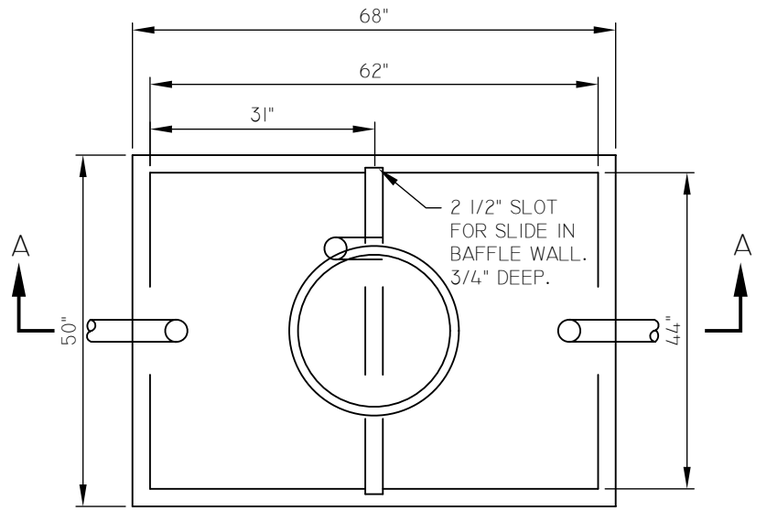

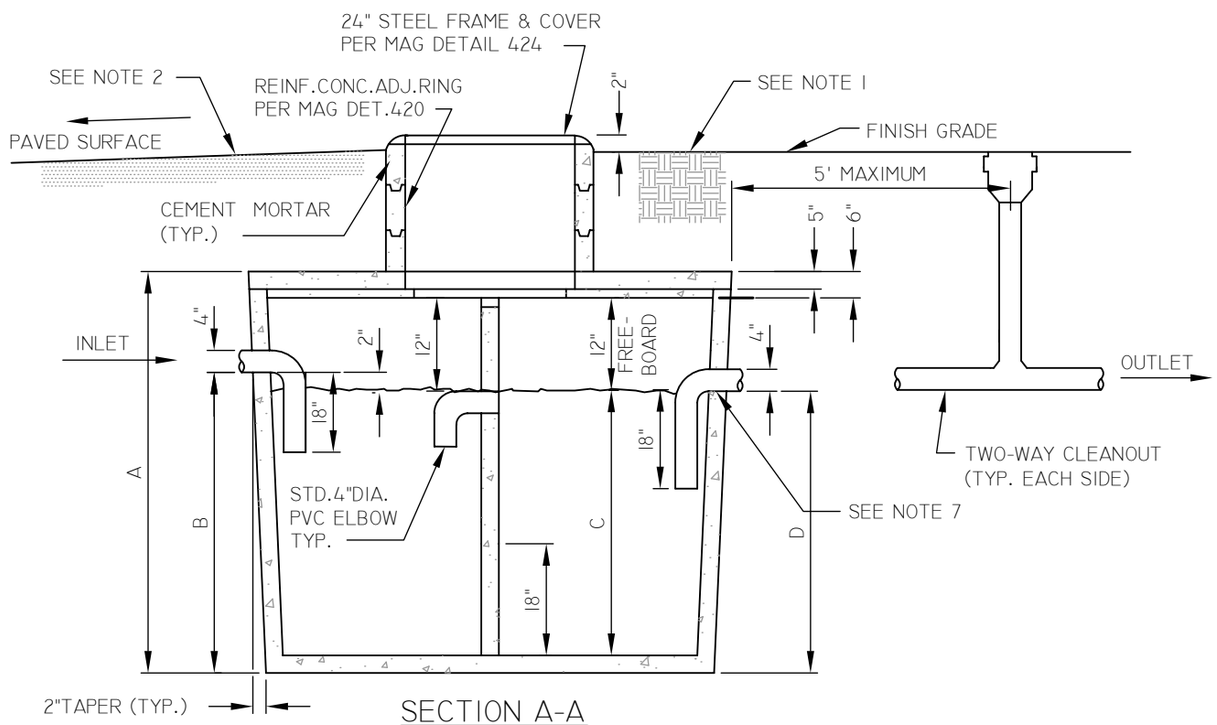

SECTION A-A

NOTES

1. ELEVATE SIDEWALLS ABOVE SURROUNDING GROUND SURFACE, AS SHOWN IN DETAIL, TO EXCLUDE SURFACE WATERS.
2. IF INSTALLED IN A PAVED AREA, SLOPE SURFACE TO PROTECT AGAINST ENTRANCE OF SURFACE RUN-OFF WATER.
3. NOT APPROVED FOR USE INSIDE AN ENCLOSED BUILDING. TANK MUST BE MINIMUM OF 2-FEET OUTSIDE OF BLDG. FOUNDATION.
4. PRE-CAST TANK TO BE REINFORCED AS REQUIRED TO MEET STRUCTURAL REQUIREMENTS OF EACH SEPARATE INSTALLATION. USE NOT RECOMMENDED WHERE VEHICLE WHEEL LOAD PASSES DIRECTLY ACROSS TOP OF INTERCEPTOR.
5. INTERIOR OF TANK SHALL BE COATED WITH ASPHALT EMULSION.
6. EXCAVATION MUST ALLOW FOR 12" CLEARANCE AROUND TANK. EXCAVATION AND BACKFILL SHALL BE PER MAG SPEC SECTION 206.
7. INLET AND OUTLET MUST BE WATERTIGHT TO STRUCTURE.
8. THE FOLLOWING DIMENSIONS ARE THE MINIMUM ALLOWABLE FOR THIS TYPE OF WASTE INTERCEPTOR:

TANK SIZE	A	B	C	D
350 GAL.	58"	41"	35"	38"
500 GAL.	69"	54"	48"	51"

NOT TO SCALE

mesa·az

LINT INTERCEPTOR

DETAIL NO.
M-36.02

REV. 1/31/2014

NOTES

1. ELEVATE SIDEWALLS ABOVE SURROUNDING GROUND SURFACE, AS SHOWN IN DETAIL, TO EXCLUDE SURFACE WATERS.
2. IF INSTALLED IN A PAVED AREA, SLOPE SURFACE TO PROTECT AGAINST ENTRANCE OF SURFACE RUN-OFF WATER.
3. DIMENSIONS SHOWN ARE THE MINIMUM ALLOWABLE FOR THIS TYPE OF WASTE INTERCEPTOR.
4. NOT APPROVED FOR USE INSIDE AN ENCLOSED BUILDING. TANK MUST BE MINIMUM OF 2-FEET OUTSIDE OF BUILDING FOUNDATION.
5. PRE-CAST TANK TO BE REINFORCED AS REQUIRED TO MEET STRUCTURAL REQUIREMENTS OF EACH SEPARATE INSTALLATION. USE NOT RECOMMENDED WHERE VEHICLE WHEEL LOAD PASSES DIRECTLY ACROSS TOP OF INTERCEPTOR.
6. INTERIOR OF TANK SHALL BE COATED WITH ASPHALT EMULSION.
7. EXCAVATION MUST ALLOW FOR 12" CLEARANCE AROUND TANK. EXCAVATION AND BACKFILL SHALL BE PER MAG SPEC. SEC. 206.
8. INLET AND OUTLET TO BE WATERTIGHT TO STRUCTURE.

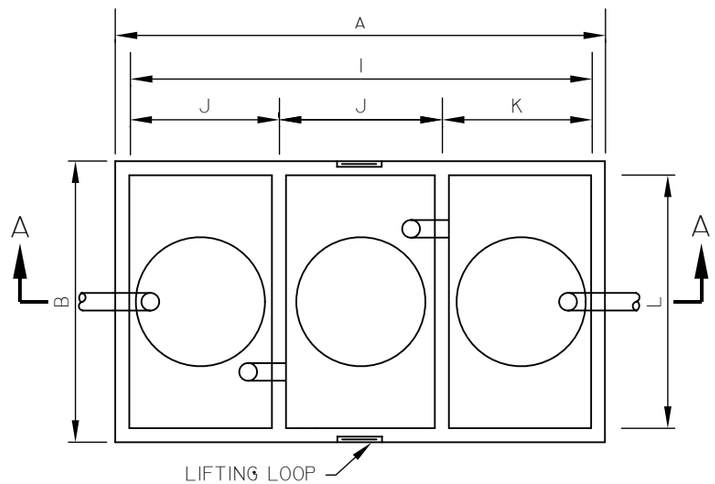

PLAN VIEW

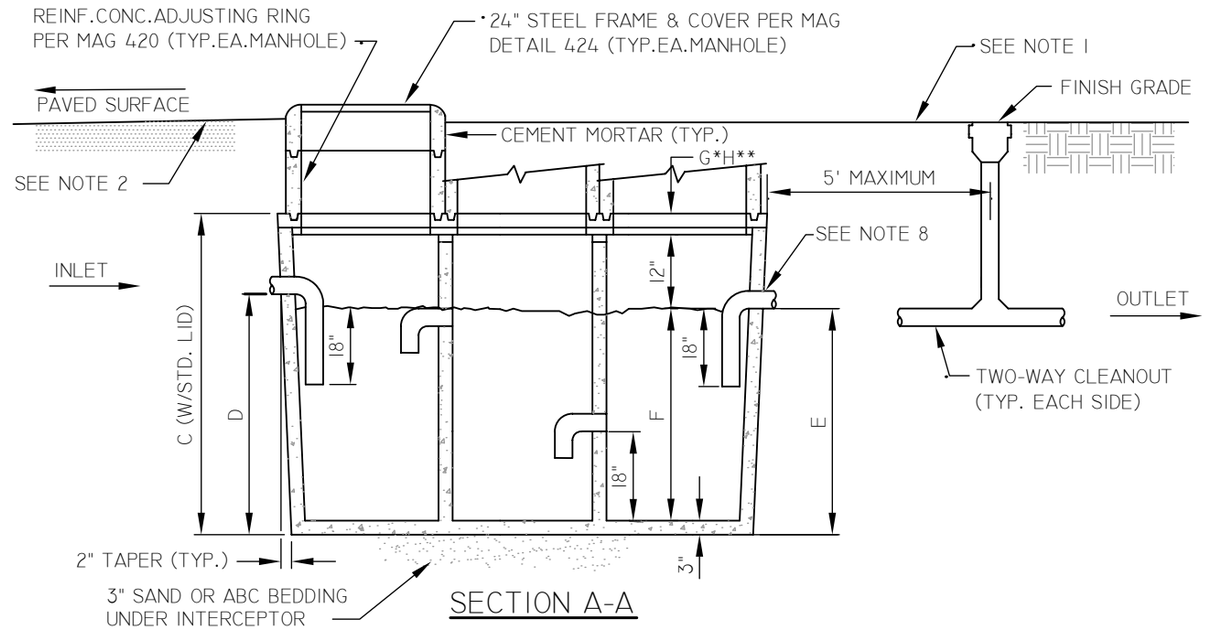

SECTION A-A

TANK SIZE	A	B	C	D	E	F	G	H	I	J	K	L
750	102"	50"	69"	54"	51"	48"	6"	6"	96"	31"	31"	44"
1050	125"	61"	64"	48"	46"	43"	6"	8"	119"	40"	39"	55"
1250	125"	61"	72"	56"	54"	51"	6"	8"	119"	40"	39"	55"
1500	125"	61"	82"	66"	64"	61"	6"	8"	119"	40"	39"	55"
2000	156"	81"	71"	53"	51"	48"	8"	10"	150"	51"	48"	75"
2500	156"	81"	80"	62"	60"	57"	8"	10"	150"	51"	48"	75"

NOT TO SCALE

mesa·az

INDUSTRIAL WASTE INTERCEPTOR

DETAIL NO.
M-36.03

REV. 1/31/2014

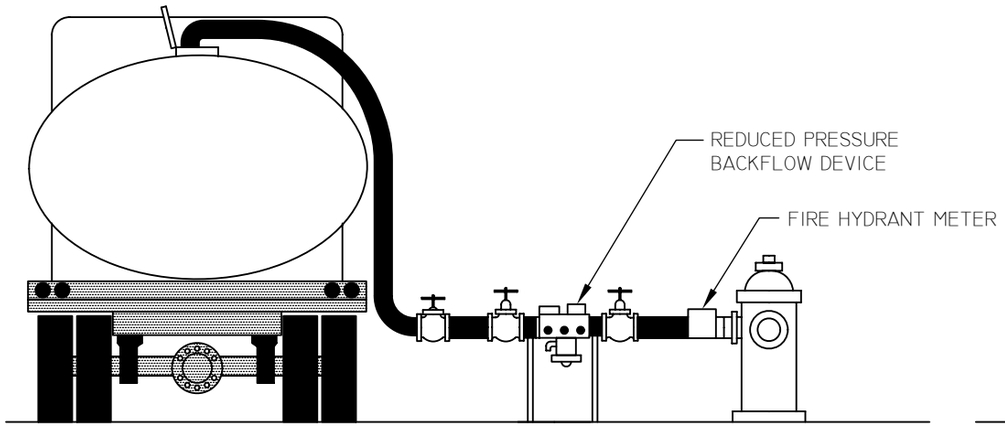

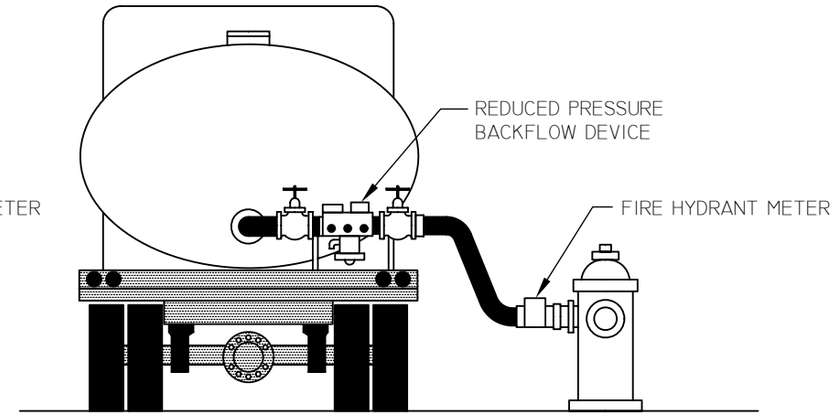

NOTE:
REDUCED PRESSURE BACKFLOW DEVICE SHALL BE SUPPLIED BY THE CONTRACTOR FROM A LIST SUPPLIED BY THE CITY OF MESA.

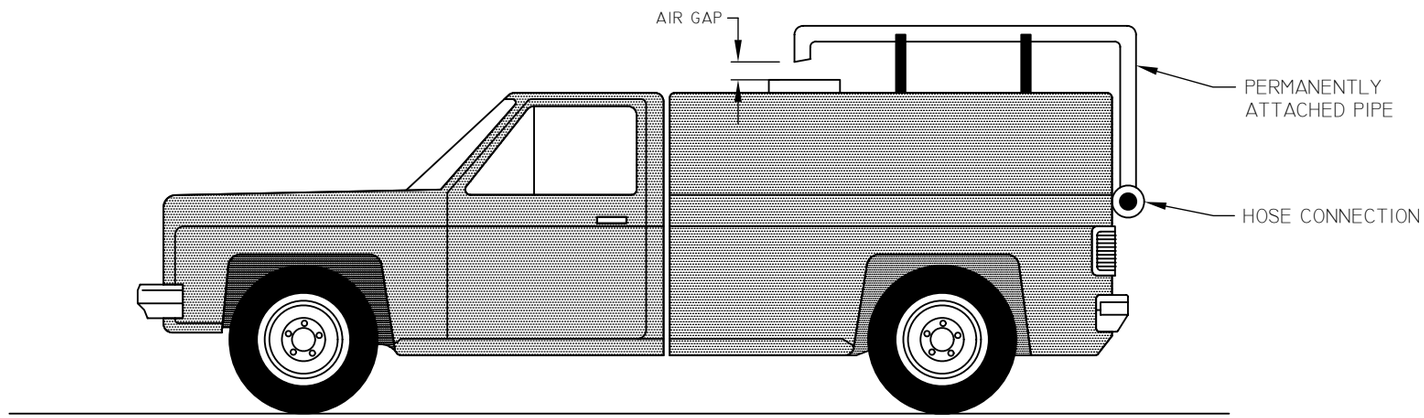

NOT TO SCALE

mesa·az

BACKFLOW PROTECTION FOR TANK TRUCKS

DETAIL NO.
M-37.01

REV. 1/31/2014

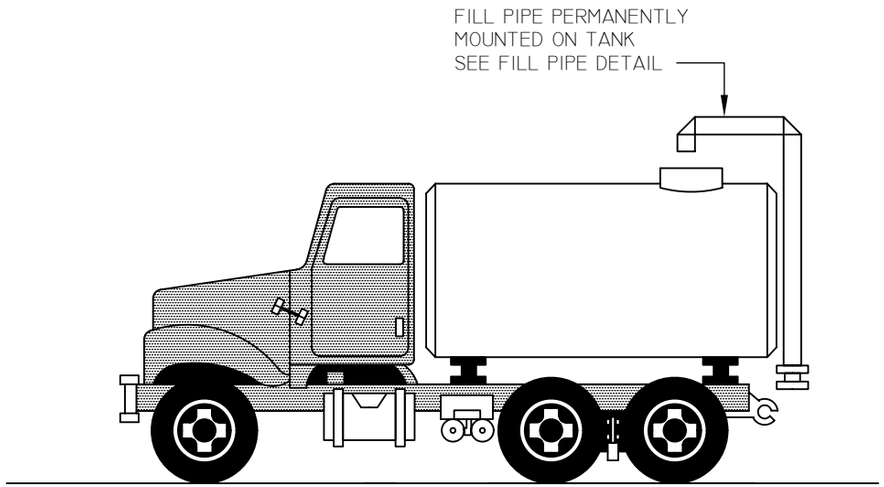

WATER TRUCK

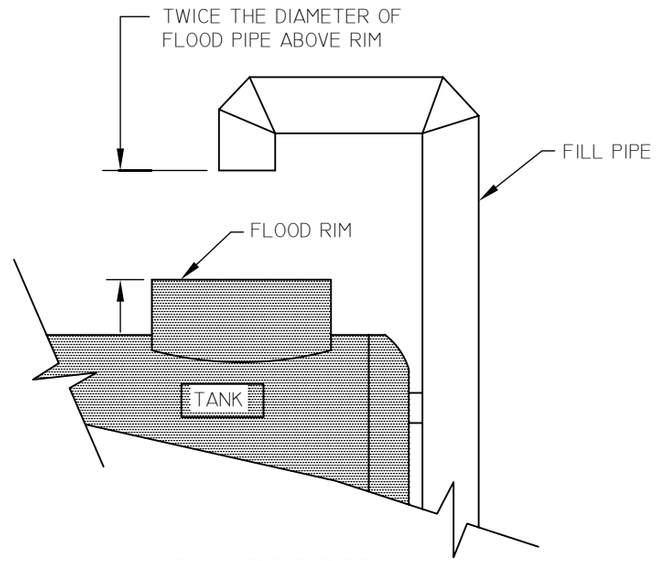

FILL PIPE DETAIL

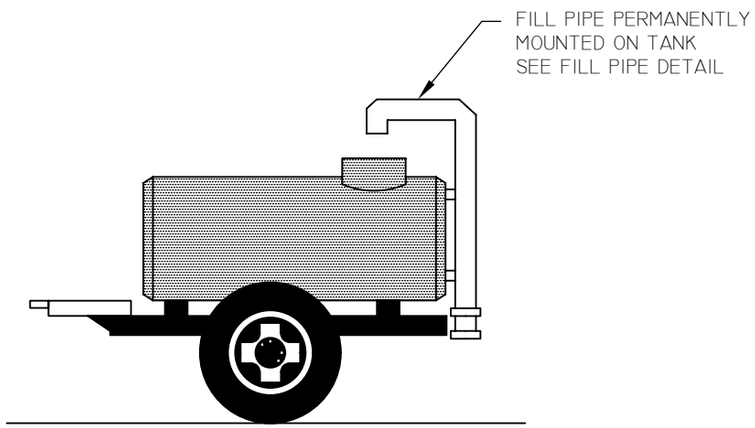

WATER WAGON

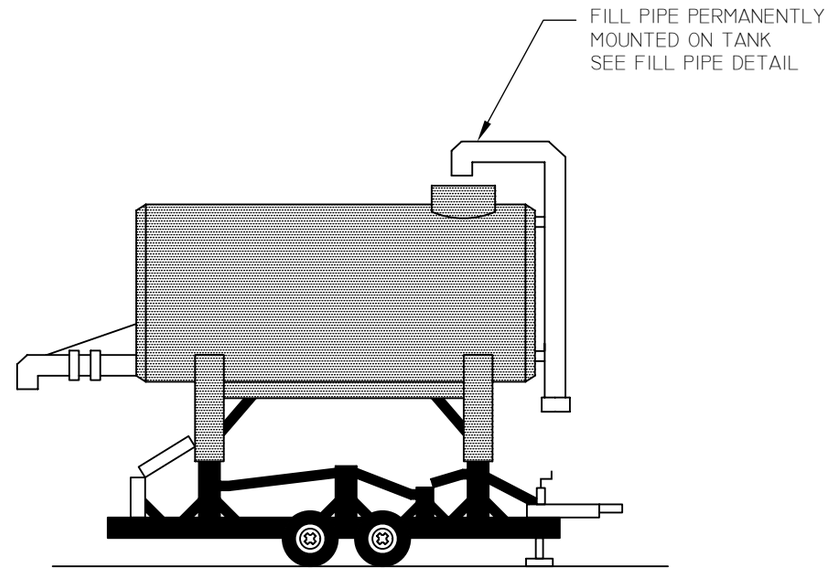

ELEVATED TANK

NOT TO SCALE

mesa·az

AIR GAP BACKFLOW PREVENTION FOR WATER TANKS

DETAIL NO.
M-37.02

REV. 1/31/2014

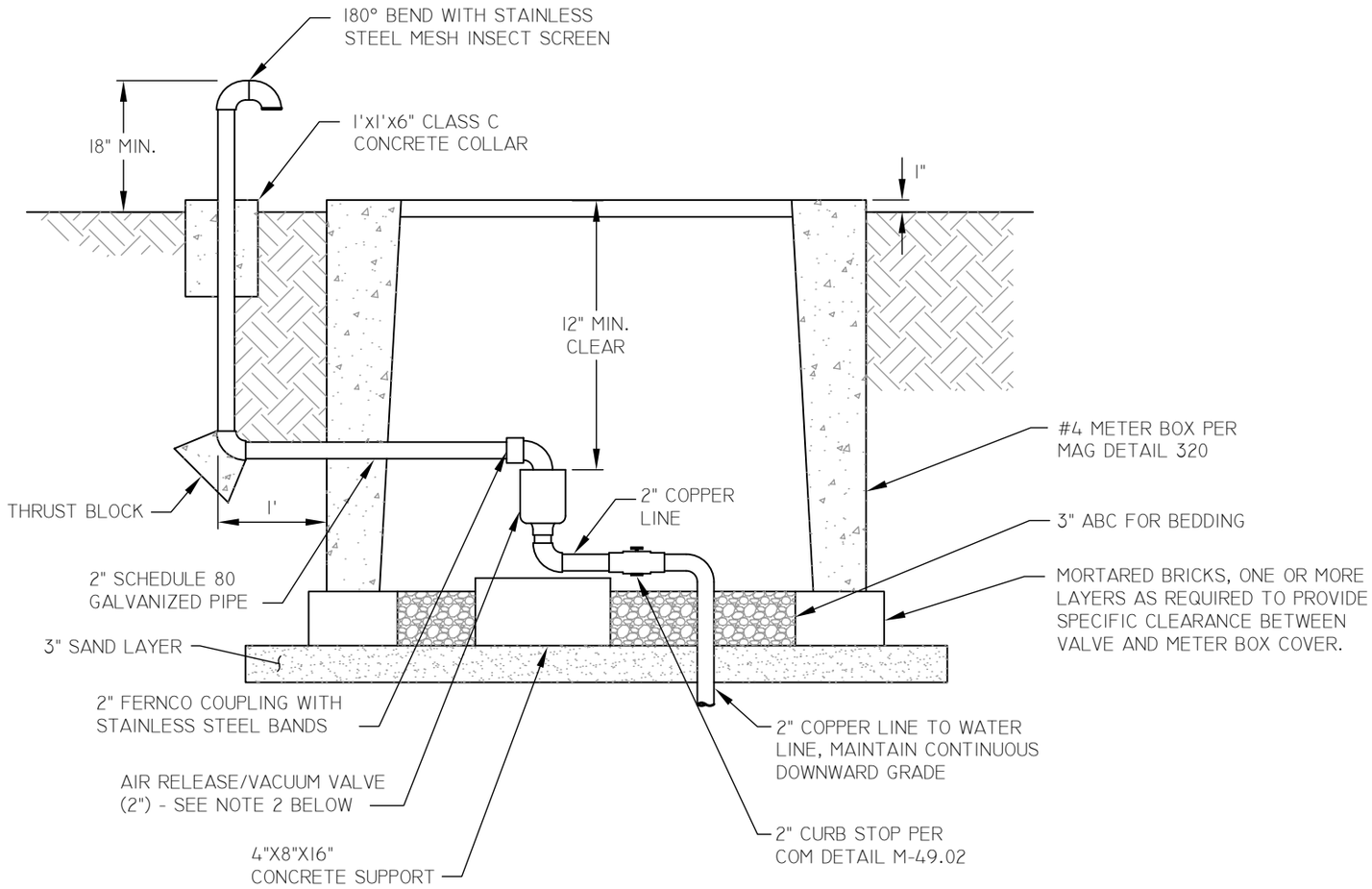

NOTES

1. PROVIDE MARKER IN NON-PAVED AREAS ONLY. SEE COM DETAIL M-38.03.
2. COMBINATION AIR RELEASE AND AIR VACUUM VALVES SHALL COMPLY WITH SECTION 630.6 OF THE MAG UNIFORM STANDARD SPECIFICATIONS, MESA AMENDMENTS, AND SHALL INCLUDE BALL VALVES, ALL PIPING, AND AIR RELEASE VALVE COVER AND CONCRETE BASE. INSTALLATION SHALL BE IN ACCORDANCE WITH THE DRAWINGS FOR APPROVED AIR RELEASE/VACUUM VALVE ASSEMBLIES. SEE APPROVED PRODUCT LIST.
3. RESTRAIN ALL PIPING FROM ARV TO MAIN.
4. SERVICE SADDLE 2" CURB STOP AND ASSOCIATED ITEMS PER COM DETAIL M-49.01 (AT WATER MAIN CONNECTION).

NOT TO SCALE

mesa·az

2" AIR/VACUUM RELEASE VALVE

DETAIL NO.
M-38.01

REV. 1/31/2014

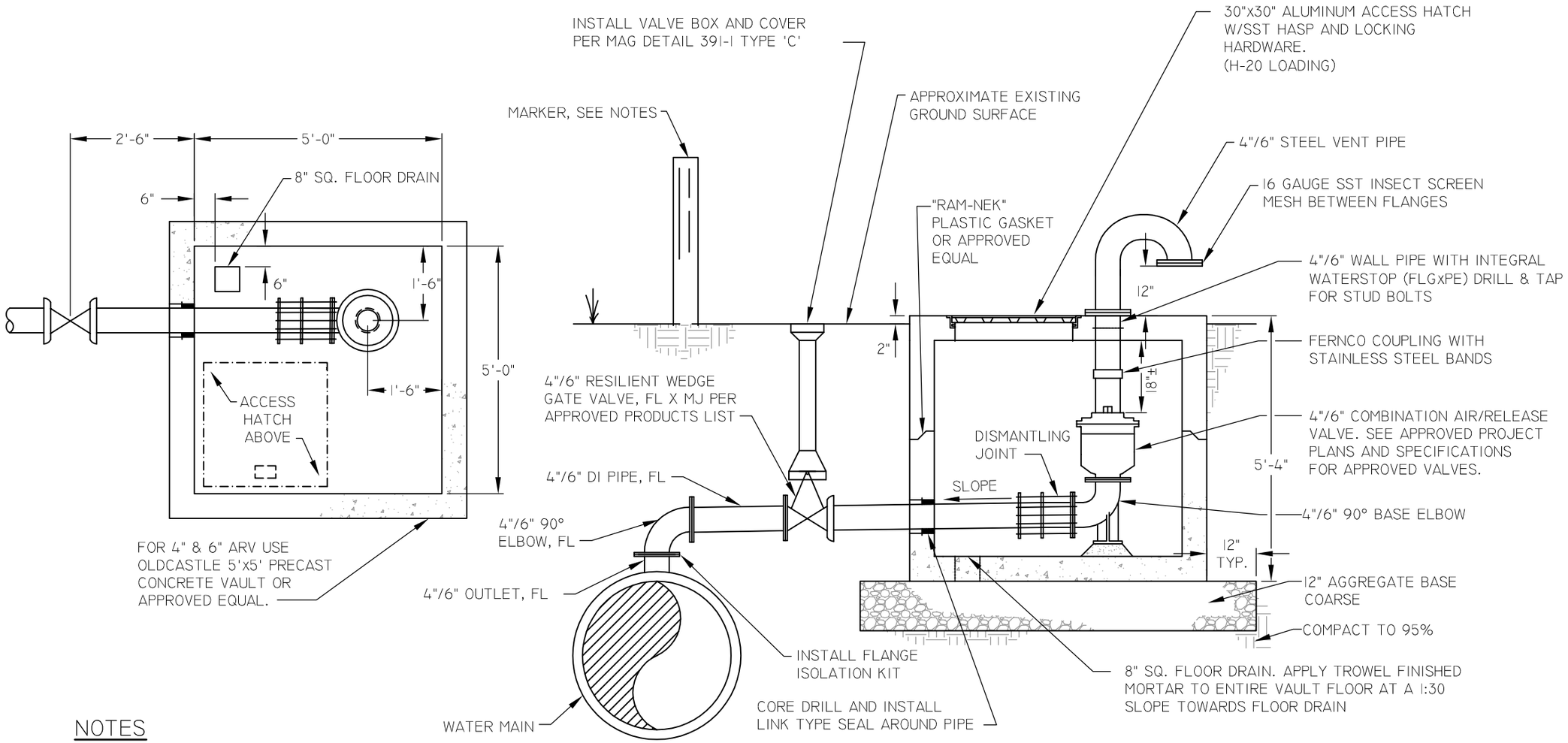

NOTES

1. MARKERS TO BE INSTALLED ONLY FOR VALVES IN NON-PAVED AREAS. REFER TO COM DETAIL M-38.03.
2. RESTRAIN ALL JOINTS FROM BASE OF ARV TO MAIN.
3. FOR 3" VALVE USE TWO 2" SIDE BY SIDE ARV'S.
4. ALL BURIED FLANGE BOLTS SHALL BE STAINLESS STEEL WITH ANTI-SEIZE APPLIED TO THREADS.

NOT TO SCALE

mesa·az

AIR/VACUUM RELEASE VALVE - 4" & 6"

DETAIL NO. M-38.02

REV. 02/11/2015

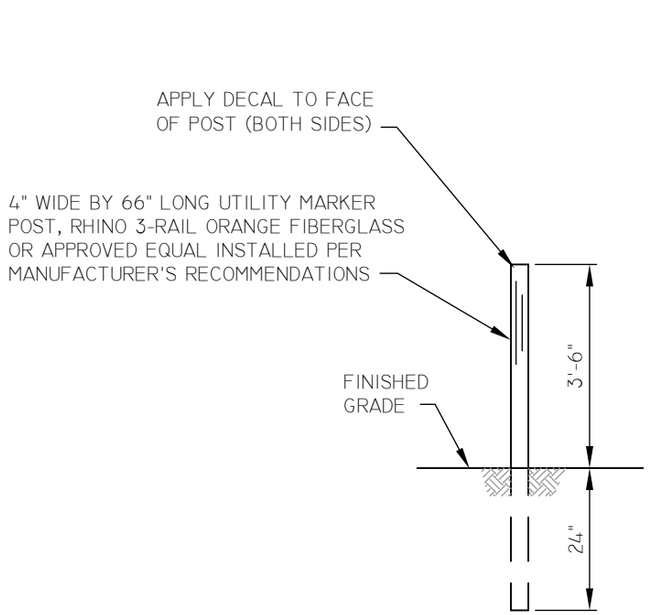

POST

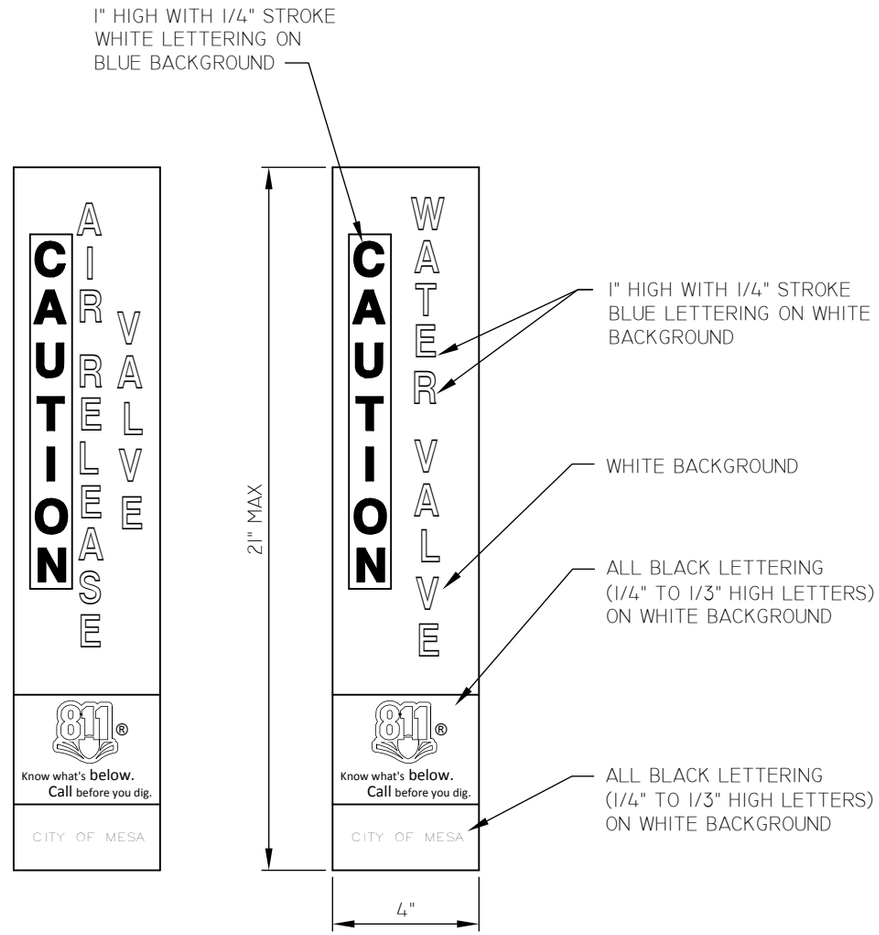

DECAL

NOTES

1. PLACE MARKERS WHERE SHOWN ON THE PLANS.
2. MARKERS NOT TYPICALLY REQUIRED IN DEVELOPED OR PAVED AREAS.

NOT TO SCALE

mesa·az

ARV / WV MARKER DETAIL

DETAIL NO.
M-38.03

REV. 1/31/2014

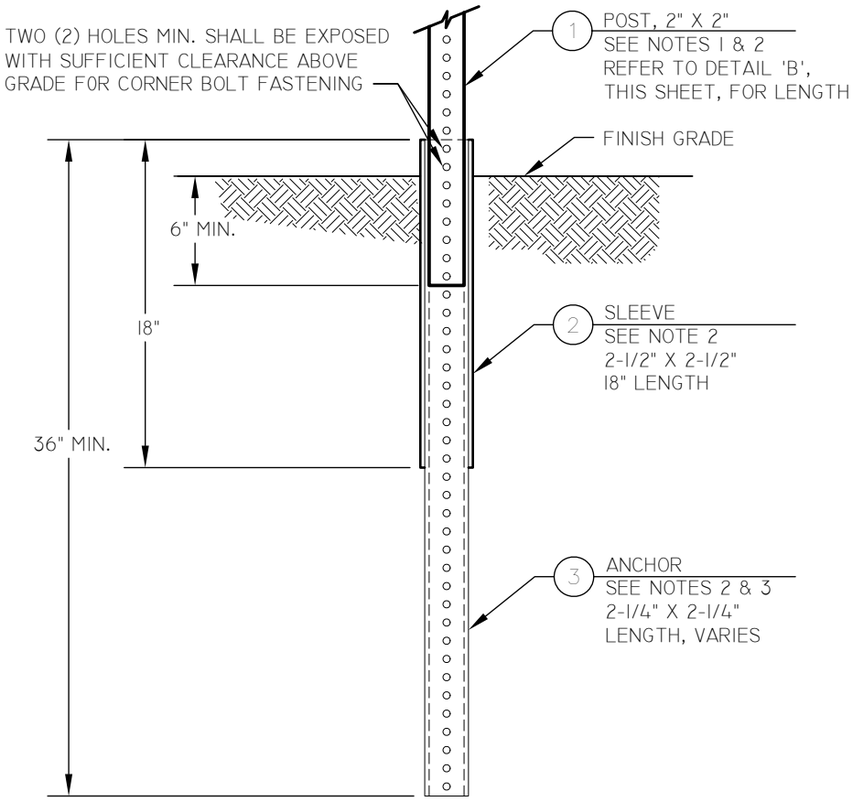

ELEVATION A - ANCHOR, SLEEVE & POST

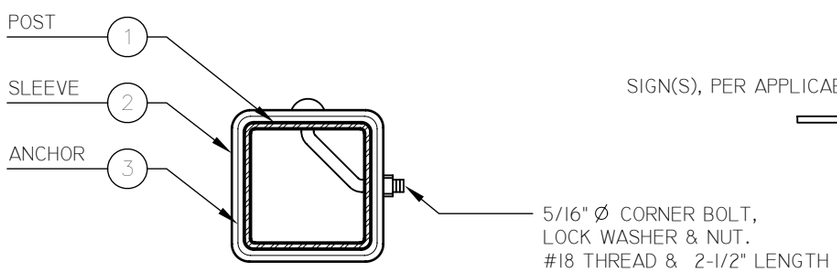

SECTION A - ANCHOR, SLEEVE & POST

DETAIL A - ANCHOR, SLEEVE & POST ASSEMBLY

NOTES

1. WHEN TOTAL AREA OF SIGNAGE EXCEEDS 2,000 SQ. IN., AN ADDITIONAL POST IS REQUIRED.
2. ANCHOR, SLEEVE AND POST SHALL BE 12 GAUGE GALVANIZED STEEL SQUARE TUBING.
3. SOIL CONDITIONS DICTATE MINIMUM ANCHOR DEPTH AND STABILIZATION:
   - WHERE SOIL CONDITIONS ALLOW, AS DETERMINED BY THE CITY, THE POST ANCHOR SHALL BE INSTALLED IN UNDISTURBED COMPACTED NATIVE SOIL TO A MINIMUM DEPTH OF 34" USING A MECHANICAL DRIVER. THE MECHANICAL DRIVER SHALL INCLUDE A DRIVING HEAD TO PREVENT DEFORMATION AND HOLD THE POST, SLEEVE AND ANCHOR ASSEMBLY IN ALIGNMENT.
   - WHERE SOIL CONDITIONS DICTATE, AS DETERMINED BY THE CITY, THE POST, SLEEVE AND ANCHOR ASSEMBLY SHALL BE EMBEDDED IN CLASS "C" CONCRETE PER MAG SECTION 725 AND AS SHOWN. TAPE OVER ANCHOR BOTTOM AND HOLES PRIOR TO CONCRETE PLACEMENT.
4. LATERAL CLEARANCES FROM POST(S) PER APPLICABLE SIGN DETAIL AND AS DETERMINED BY THE CITY.

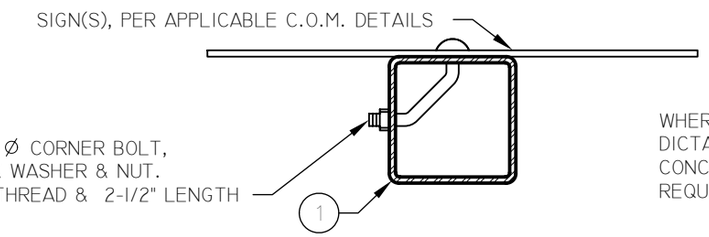

SECTION B - SIGN FASTENING

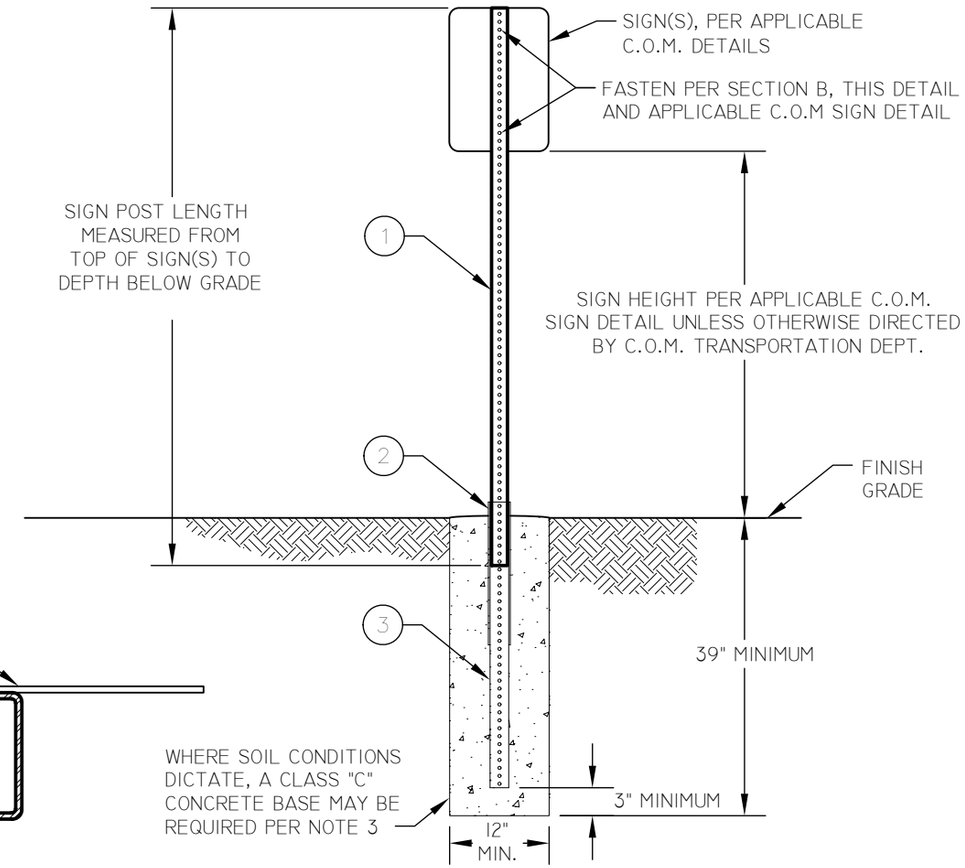

ELEVATION B - SIGN ASSEMBLY

DETAIL B - POST & SIGN ASSEMBLY

NOT TO SCALE

mesa·az

SIGN POST INSTALLATION (SQUARE TUBING)

DETAIL NO. M-39

REV. 02/04/13

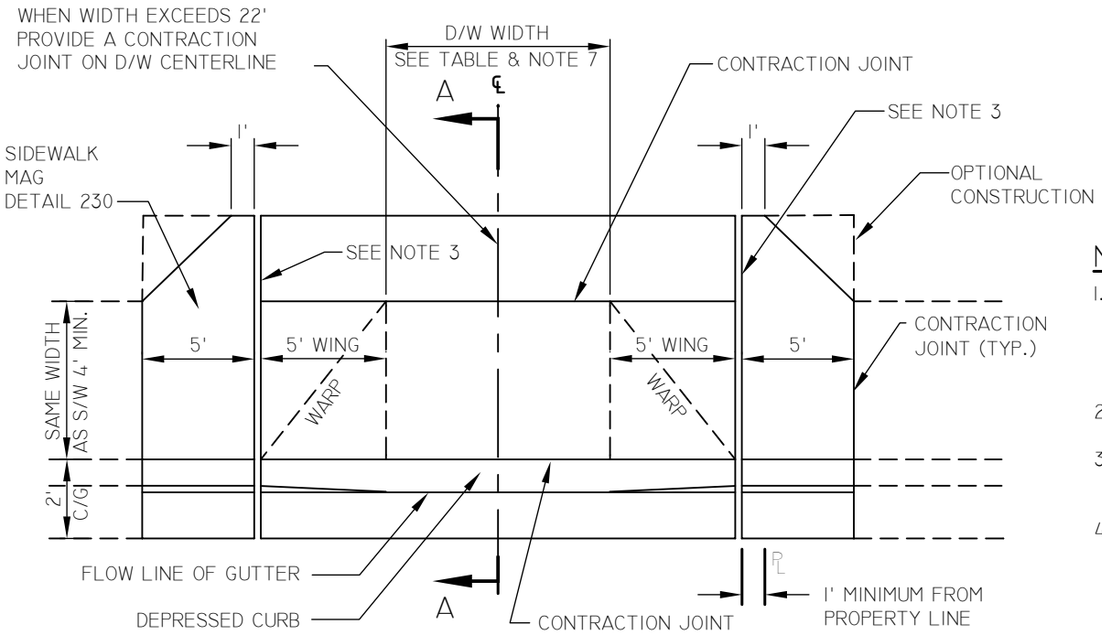

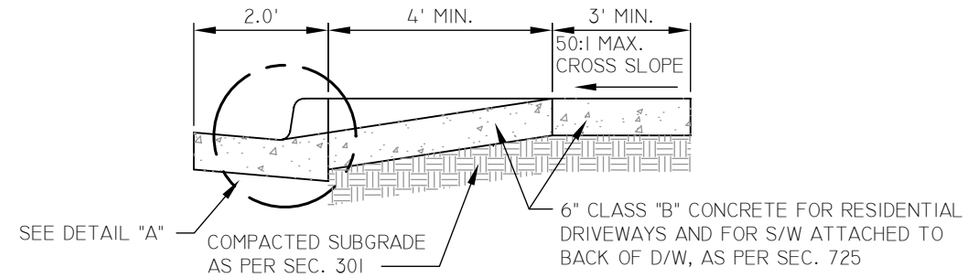

SECTION "A"-"A"

CARPORT/GARAGE	1 CAR	2 CAR	3 CAR
DRIVEWAY WIDTH	12'-16' 16' MIN. ON ARTERIAL STREET	16'-20'	26'-30'

NOTES

1. EXPANSION JOINT MATERIAL SHALL BE SECURED IN PLACE PRIOR TO POURING CONCRETE AND SHALL COMPLETELY SEPARATE THE DRIVEWAY SLAB FROM THE SIDEWALK, EXTENDING FROM THE SURFACE TO THE SUBGRADE. EXPANSION JOINT FILLER SHALL BE 1/2" BITUMINOUS TYPE PREFORMED EXPANSION JOINT FILLER A.S.T.M. D-1751.
2. REFER TO MAG DETAIL 230 FOR CONTRACTION AND EXPANSION JOINT DETAILS.
3. DRIVEWAYS GREATER THAN 30' IN WIDTH REQUIRE CITY APPROVAL. UTILITY AND PROPERTY LINE CONFLICTS SHALL BE CONSIDERED FOR ALL DRIVEWAY INSTALLATIONS.
4. WHEN INSTALLING A DRIVEWAY IN EXISTING SIDEWALK AND/OR CURB, THE FOLLOWING NOTES APPLY:
   A. REMOVE CURB PORTION ONLY WHEN CONSTRUCTING NEW DEPRESSION IN EXISTING CURB & GUTTER. EXISTING CURB SHALL BE REMOVED BY SAWCUTTING CURB HORIZONTALLY TO GRADES AS SHOWN IN DETAIL A. DAMAGED GUTTER SHALL BE REMOVED AND REPLACED WHERE DIRECTED BY ENGINEER.
   B. SIDEWALK MUST BE SAWCUT TO FULL DEPTH OR REMOVED TO NEXT EXPANSION JOINT.
5. THE BACK OF R/W OR PUFE SHALL EXTEND 2' MINIMUM BEYOND THE BACK OF SIDEWALK BEHIND THE DRIVEWAY APPROACH UNLESS OTHERWISE APPROVED BY THE CITY.
6. WHEN WINGS OF TWO DRIVEWAYS ARE SEPARATED BY A DISTANCE OF 15' OR LESS, THE SIDEWALK SHALL CONTINUE STRAIGHT BETWEEN THE DRIVEWAYS AS NOTED IN DETAIL B.
7. FOR RESIDENTIAL SMALL LOT-MULTI-LOT PRIVATE DEVELOPMENTS, MINIMUM DRIVEWAY WIDTH SHALL BE 24' ON A LOCAL STREET. USE COM DETAIL M-42 FOR DRIVEWAYS ON COLLECTOR OR ARTERIAL STREETS.

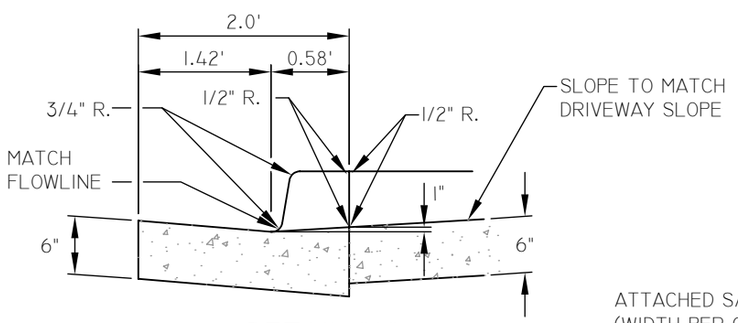

DETAIL "A"

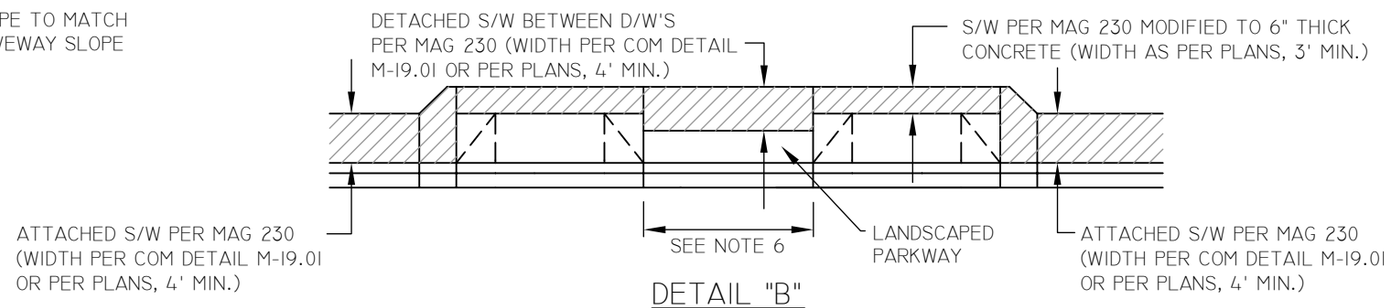

DETAIL "B"

(ADJACENT DRIVEWAYS SEPARATED BY 15' OR LESS)

NOT TO SCALE

RESIDENTIAL DRIVEWAY ENTRANCE - TYPE 1
(SIDEWALK ADJACENT TO CURB)

DETAIL NO. M-40.01

REV. 1/31/2014

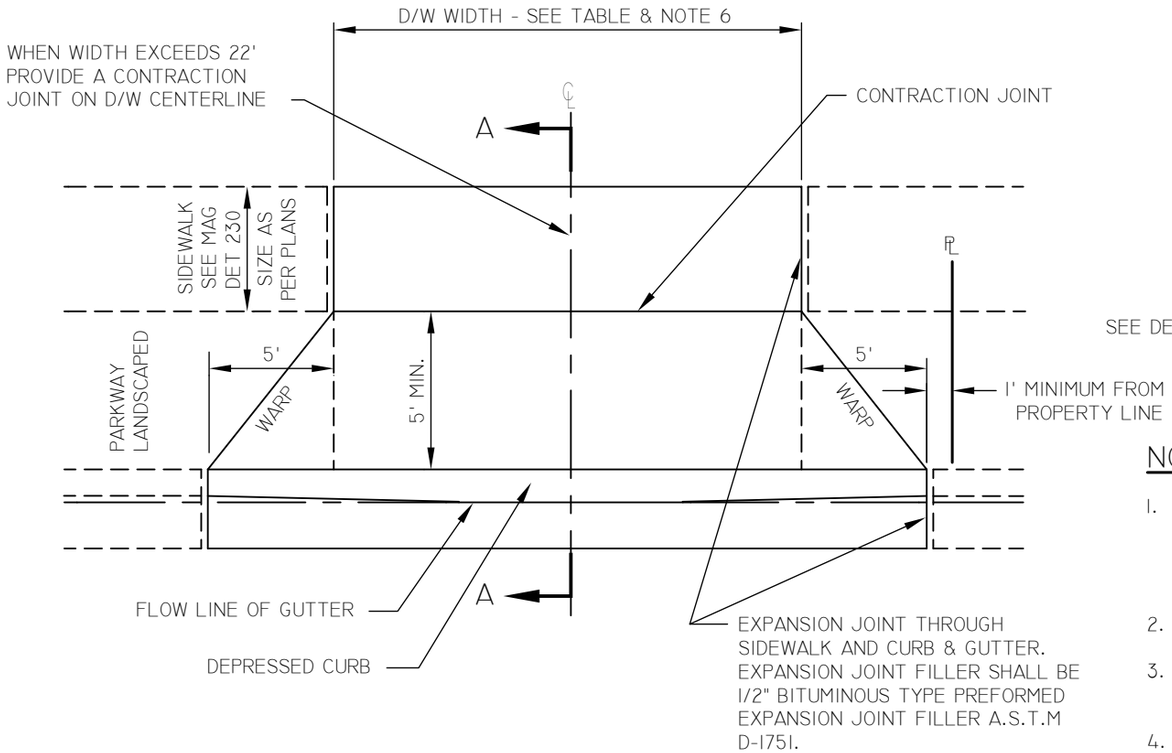

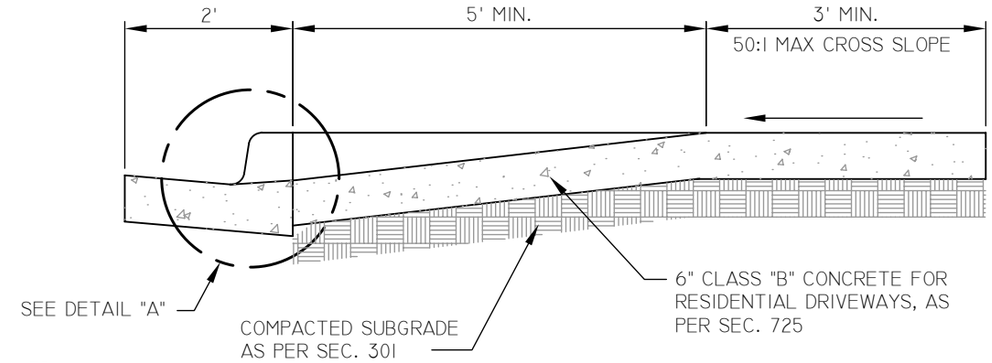

SECTION "A"-"A"

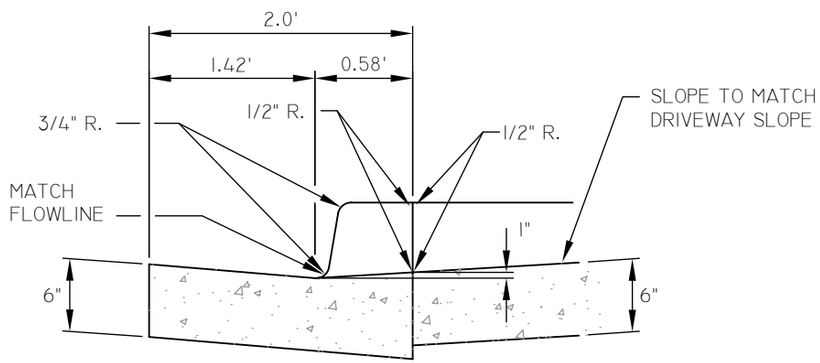

DETAIL "A"

NOTES

1. EXPANSION JOINT MATERIAL SHALL BE SECURED IN PLACE PRIOR TO POURING CONCRETE AND SHALL COMPLETELY SEPARATE THE DRIVEWAY SLAB FROM THE SIDEWALK, EXTENDING FROM THE SURFACE TO THE SUBGRADE. EXPANSION JOINT FILLER SHALL BE 1/2" BITUMINOUS TYPE PREFORMED EXPANSION JOINT FILLER A.S.T.M. D-1751.
2. REFER TO MAG DETAIL 230 FOR CONTRACTION AND EXPANSION JOINT DETAILS.
3. DRIVEWAYS GREATER THAN 30' IN WIDTH REQUIRE CITY APPROVAL. UTILITY AND PROPERTY LINE CONFLICTS SHALL BE CONSIDERED FOR ALL DRIVEWAY INSTALLATIONS.
4. WHEN INSTALLING A DRIVEWAY IN EXISTING SIDEWALK AND/OR CURB, THE FOLLOWING NOTES APPLY:
   A. REMOVE CURB PORTION ONLY WHEN CONSTRUCTING NEW DEPRESSION IN EXISTING CURB & GUTTER. EXISTING CURB SHALL BE REMOVED BY SAWCUTTING CURB HORIZONTALLY TO GRADES AS SHOWN IN DETAIL A. DAMAGED GUTTER SHALL BE REMOVED AND REPLACED WHERE DIRECTED BY ENGINEER.
   B. SIDEWALK MUST BE SAWCUT TO FULL DEPTH OR REMOVED TO NEXT EXPANSION JOINT.
5. THE BACK OF R/W OR PUFE SHALL EXTEND 2' MINIMUM BEYOND THE BACK OF SIDEWALK BEHIND THE DRIVEWAY APPROACH, UNLESS OTHERWISE APPROVED BY THE CITY.
6. FOR RESIDENTIAL SMALL LOT/MULTI-LOT PRIVATE DRIVE DEVELOPMENTS, MINIMUM DRIVEWAY WIDTH SHALL BE 24' ON A LOCAL STREET. USE COM DETAIL M-42 FOR DRIVEWAYS ON COLLECTOR OR ARTERIAL STREETS.

CARPORT/GARAGE	1 CAR	2 CAR	3 CAR
DRIVEWAY WIDTH	12'-16' 16' MIN. ON ARTERIAL STREET	16'-20'	26'-30'

NOT TO SCALE

mesa·az

RESIDENTIAL DRIVEWAY ENTRANCE - TYPE 2
(DETACHED SIDEWALK)

DETAIL NO.
M-40.02

REV. 1/31/2014

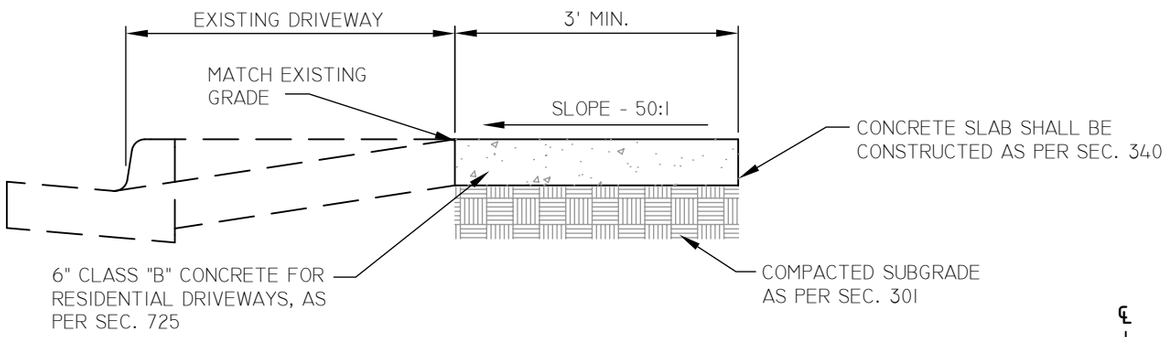

SECTION "A"-"A"

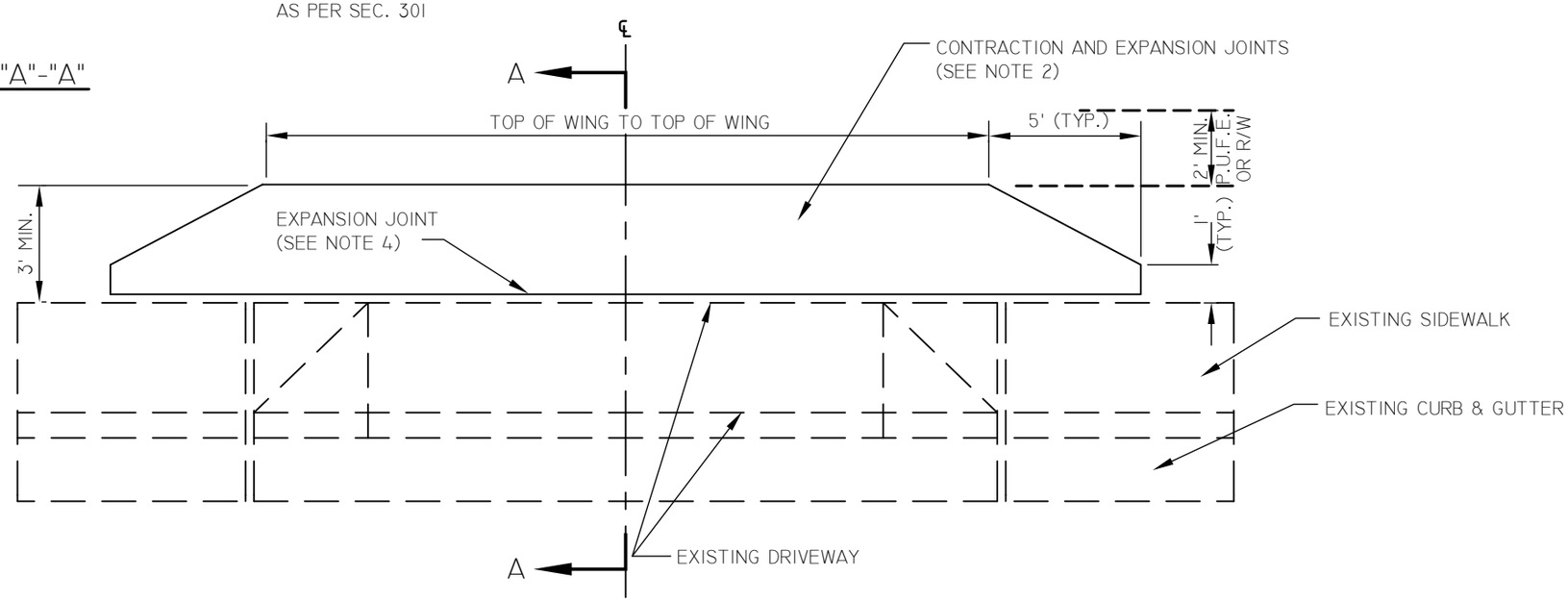

PLAN

NOTES

1. COM DETAIL M-40.03, "RESIDENTIAL DRIVEWAY ENTRANCE- RETROFIT ONLY" SHALL BE USED ONLY ON EXISTING DRIVEWAYS. REFER TO COM DETAILS M-40.01 AND M-40.02 FOR NEW RESIDENTIAL DRIVEWAY INSTALLATIONS.
2. CONTRACTION AND EXPANSION JOINTS SHALL ALIGN WITH EXISTING JOINTS IN DRIVEWAY.
3. REFER TO MAG DETAIL 230 FOR CONTRACTION AND EXPANSION JOINT DETAILS.
4. EXPANSION JOINT MATERIAL SHALL BE SECURED IN PLACE PRIOR TO POURING CONCRETE AND SHALL COMPLETELY SEPARATE THE DRIVEWAY SLAB FROM THE SIDEWALK, EXTENDING FROM THE SURFACE TO THE SUBGRADE. EXPANSION JOINT FILLER SHALL BE 1/2" BITUMINOUS TYPE PREFORMED EXPANSION JOINT FILLER A.S.T.M D-1751.
5. CONCRETE SHALL BE CLASS "B" SEC. 725.
6. THE BACK OF R/W OR PUFE SHALL EXTEND 2' MINIMUM BEYOND THE BACK OF SIDEWALK BEHIND THE DRIVEWAY APPROACH, UNLESS OTHERWISE APPROVED BY THE CITY.

NOT TO SCALE

mesa·az

RESIDENTIAL DRIVEWAY ENTRANCE - RETROFIT ONLY

DETAIL NO. M-40.03

REV. 1/31/14

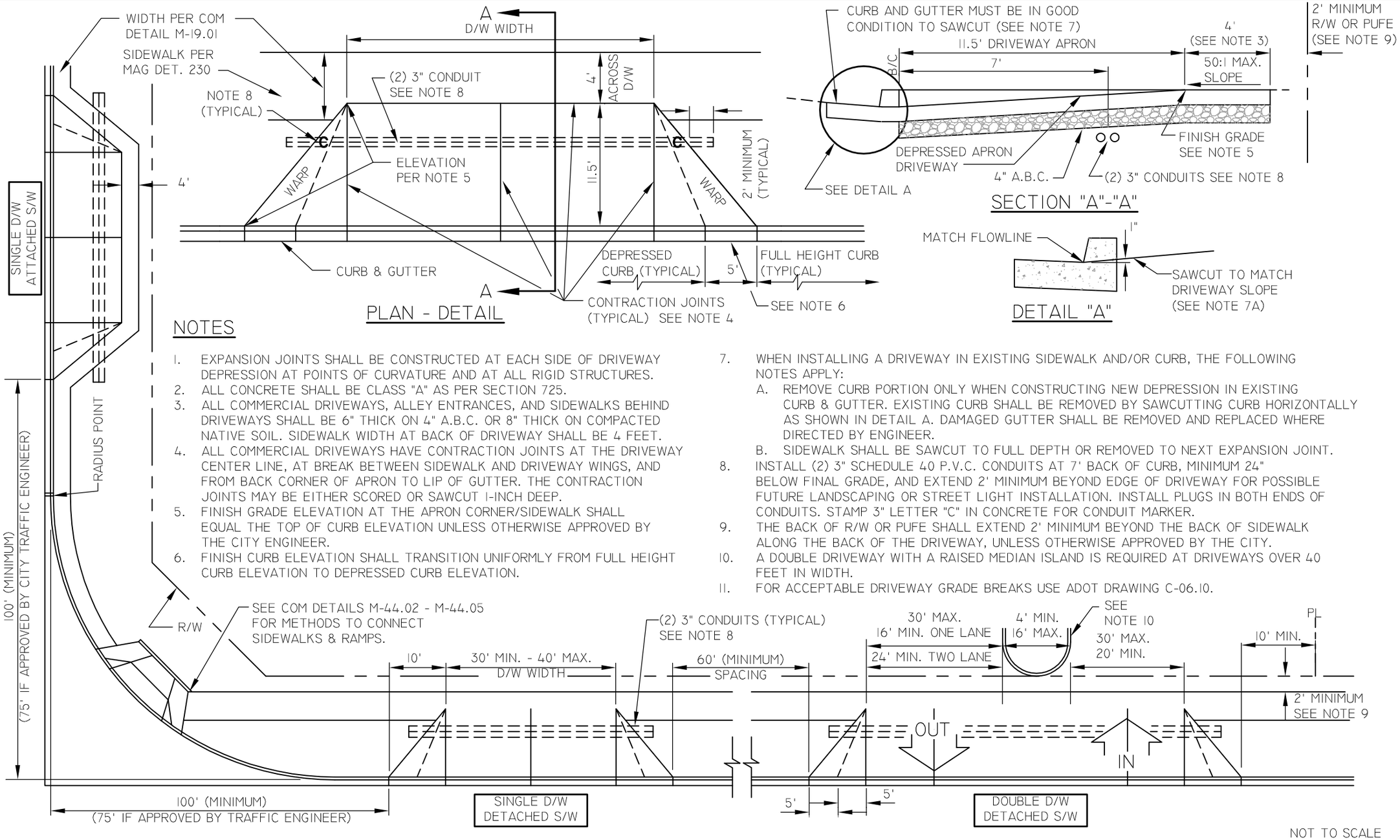

NOTES

1. EXPANSION JOINTS SHALL BE CONSTRUCTED AT EACH SIDE OF DRIVEWAY DEPRESSION AT POINTS OF CURVATURE AND AT ALL RIGID STRUCTURES.
2. ALL CONCRETE SHALL BE CLASS "A" AS PER SECTION 725.
3. ALL COMMERCIAL DRIVEWAYS, ALLEY ENTRANCES, AND SIDEWALKS BEHIND DRIVEWAYS SHALL BE 6" THICK ON 4" A.B.C. OR 8" THICK ON COMPACTED NATIVE SOIL. SIDEWALK WIDTH AT BACK OF DRIVEWAY SHALL BE 4 FEET.
4. ALL COMMERCIAL DRIVEWAYS HAVE CONTRACTION JOINTS AT THE DRIVEWAY CENTER LINE, AT BREAK BETWEEN SIDEWALK AND DRIVEWAY WINGS, AND FROM BACK CORNER OF APRON TO LIP OF GUTTER. THE CONTRACTION JOINTS MAY BE EITHER SCORED OR SAWCUT 1-INCH DEEP.
5. FINISH GRADE ELEVATION AT THE APRON CORNER/SIDEWALK SHALL EQUAL THE TOP OF CURB ELEVATION UNLESS OTHERWISE APPROVED BY THE CITY ENGINEER.
6. FINISH CURB ELEVATION SHALL TRANSITION UNIFORMLY FROM FULL HEIGHT CURB ELEVATION TO DEPRESSED CURB ELEVATION.
7. WHEN INSTALLING A DRIVEWAY IN EXISTING SIDEWALK AND/OR CURB, THE FOLLOWING NOTES APPLY:
   A. REMOVE CURB PORTION ONLY WHEN CONSTRUCTING NEW DEPRESSION IN EXISTING CURB & GUTTER. EXISTING CURB SHALL BE REMOVED BY SAWCUTTING CURB HORIZONTALLY AS SHOWN IN DETAIL A. DAMAGED GUTTER SHALL BE REMOVED AND REPLACED WHERE DIRECTED BY ENGINEER.
   B. SIDEWALK SHALL BE SAWCUT TO FULL DEPTH OR REMOVED TO NEXT EXPANSION JOINT.
8. INSTALL (2) 3" SCHEDULE 40 P.V.C. CONDUITS AT 7' BACK OF CURB, MINIMUM 24" BELOW FINAL GRADE, AND EXTEND 2' MINIMUM BEYOND EDGE OF DRIVEWAY FOR POSSIBLE FUTURE LANDSCAPING OR STREET LIGHT INSTALLATION. INSTALL PLUGS IN BOTH ENDS OF CONDUITS. STAMP 3" LETTER "C" IN CONCRETE FOR CONDUIT MARKER.
9. THE BACK OF R/W OR PUFE SHALL EXTEND 2' MINIMUM BEYOND THE BACK OF SIDEWALK ALONG THE BACK OF THE DRIVEWAY, UNLESS OTHERWISE APPROVED BY THE CITY.
10. A DOUBLE DRIVEWAY WITH A RAISED MEDIAN ISLAND IS REQUIRED AT DRIVEWAYS OVER 40 FEET IN WIDTH.
11. FOR ACCEPTABLE DRIVEWAY GRADE BREAKS USE ADOT DRAWING C-06.10.

mesa·az

COMMERCIAL, INDUSTRIAL AND APARTMENT
DRIVEWAY DETAIL - DETACHED S/W

DETAIL NO. M-42

REV. 02/19/2015

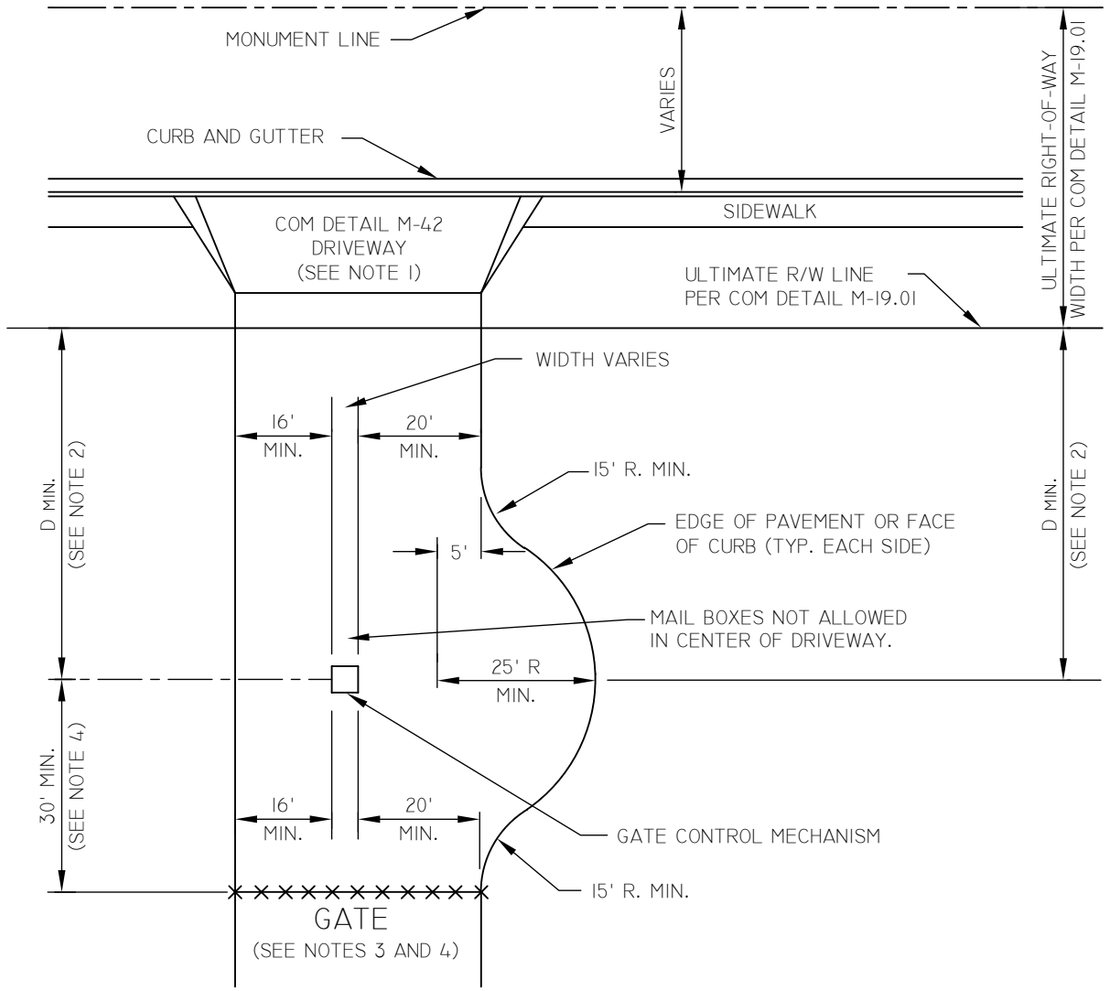

NOTES

1. DRIVEWAY PER COM DETAIL M-42. DOUBLE DRIVEWAY MAX. WIDTH = 60'.

2. D MIN. FROM ULTIMATE R/W LINE PER COM DETAIL M-19.01 TO CENTERLINE OF GATE CONTROL MECHANISM. D MIN. VARIES IN ACCORDANCE WITH THE TYPE OF DEVELOPMENT (RESIDENTIAL OR NON- RESIDENTIAL) AND THE NUMBER OF UNITS IN THE DEVELOPMENT AS SHOWN BELOW:

RESIDENTIAL UNITS	D MIN.
LESS THAN 25	20'
25 TO 100	40'
101 TO 150	60'
151 TO 200	80'
GREATER THAN 200	100'
NON-RESIDENTIAL UNITS	**D MIN.**
ANY NUMBER OF UNITS	60'

3. GATE INSTALLED AT BEGINNING OF 15' RADIUS.

4. 30' MIN. DIMENSION FROM CENTERLINE OF GATE CONTROL MECHANISM TO FACE OF GATE.

5. WHERE EXISTING CONDITIONS DEEM IT NECESSARY TO REQUEST A DESIGN EXCEPTION OF THE GATED ACCESS, THIS STANDARD MAY BE MODIFIED BY THE TRAFFIC ENGINEER AND/OR CITY ENGINEER.

NOT TO SCALE

mesa·az

TYPICAL DRIVEWAY ACCESS TO PRIVATE
GATED COMMUNITY WITHOUT MAILBOX AREA

DETAIL NO.
M-42.01

REV. 01/31/14

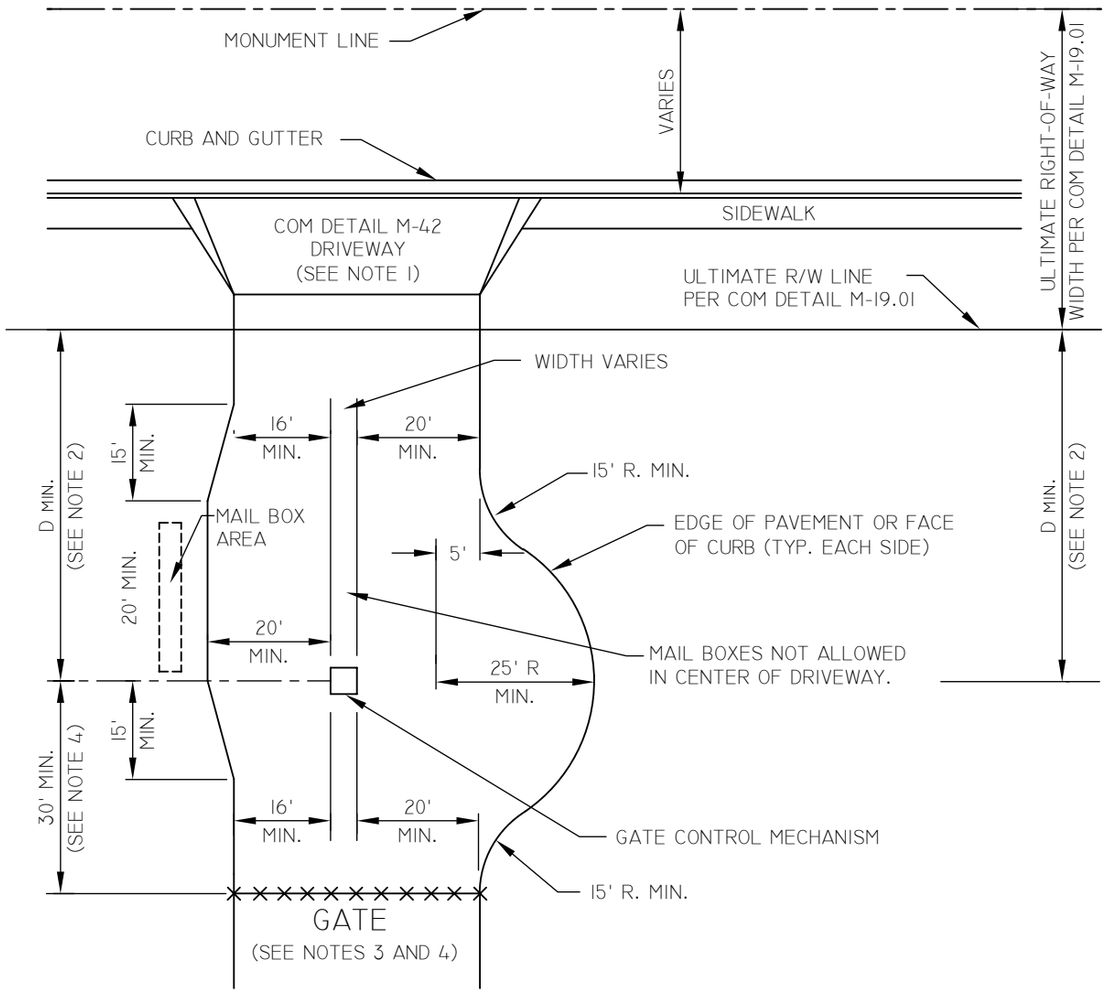

NOTES

1. DRIVEWAY PER COM DETAIL M-42. DOUBLE DRIVEWAY MAX. WIDTH = 60'.

2. D MIN. FROM ULTIMATE R/W LINE PER COM DETAIL M-19.01 TO CENTERLINE OF GATE CONTROL MECHANISM. D MIN. VARIES IN ACCORDANCE WITH THE TYPE OF DEVELOPMENT (RESIDENTIAL OR NON- RESIDENTIAL) AND THE NUMBER OF UNITS IN THE DEVELOPMENT AS SHOWN BELOW:

RESIDENTIAL UNITS	D MIN.
LESS THAN 25	20'
25 TO 100	40'
101 TO 150	60'
151 TO 200	80'
GREATER THAN 200	100'

NON-RESIDENTIAL UNITS	D MIN.
ANY NUMBER OF UNITS	60'

3. GATE INSTALLED AT BEGINNING OF 15' RADIUS.

4. 30' MIN. DIMENSION FROM CENTERLINE OF GATE CONTROL MECHANISM TO FACE OF GATE.

5. WHERE EXISTING CONDITIONS DEEM IT NECESSARY TO REQUEST A DESIGN EXCEPTION OF THE GATED ACCESS, THIS STANDARD MAY BE MODIFIED BY THE TRAFFIC ENGINEER AND/OR CITY ENGINEER.

NOT TO SCALE

mesa·az

TYPICAL DRIVEWAY ACCESS TO PRIVATE GATED COMMUNITY WITH MAILBOX AREA

DETAIL NO.
M-42.02

REV. 01/31/14

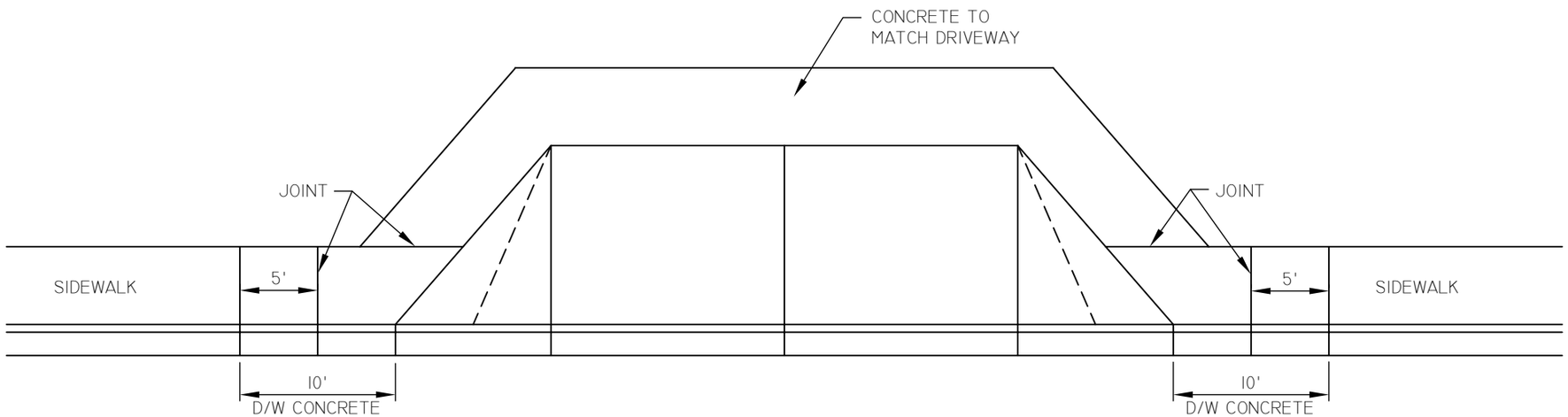

NOTE

1. SEE COM DETAIL M-42 FOR DRIVEWAY DETAILS.

NOT TO SCALE

COMMERCIAL, INDUSTRIAL AND APARTMENT DRIVEWAY
DETAIL - SIDEWALK ADJACENT TO CURB

DETAIL NO.
M-42.03

REV. 01/31/14

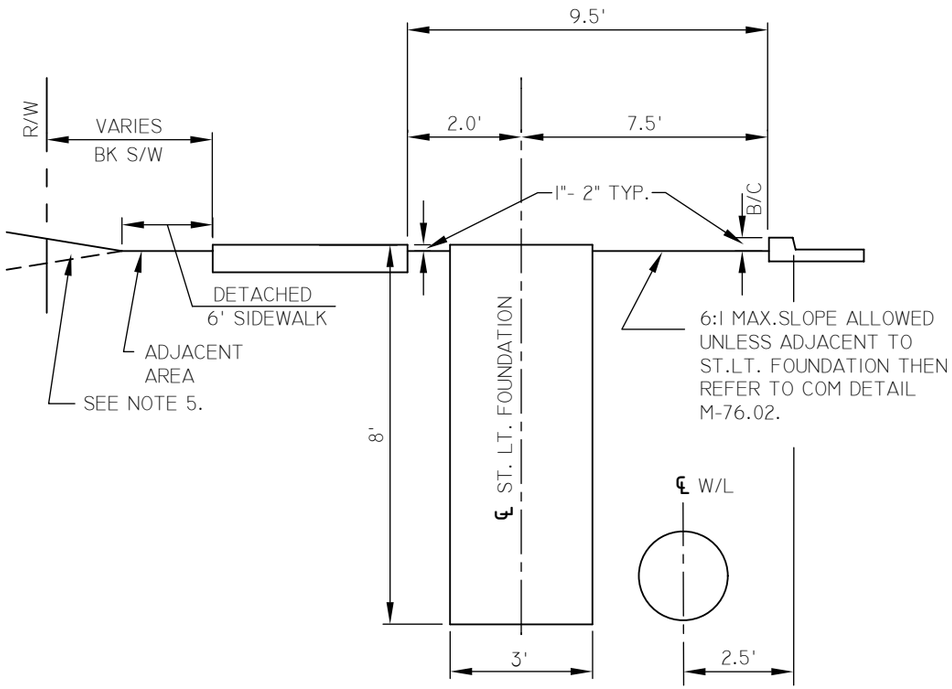

TYPICAL SECTION

MAY NOT APPLY WITHIN 600 FEET OF AN INTERSECTION. SEE COM DETAILS M-46.01 THROUGH M-46.05.

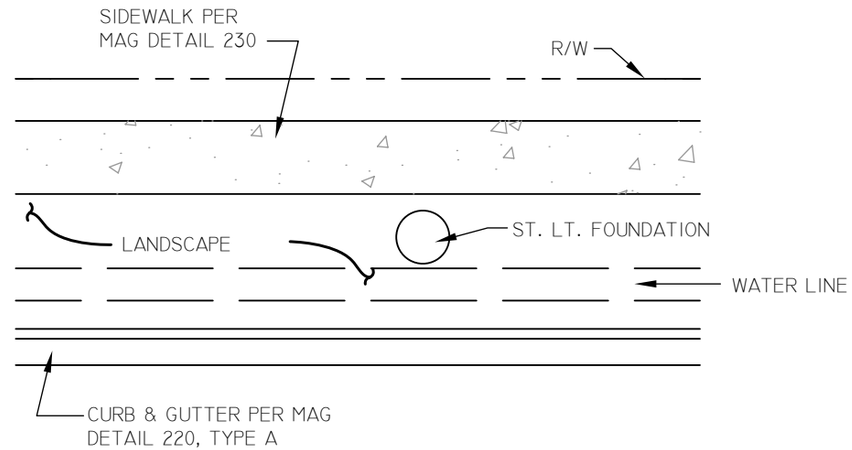

TYPICAL PLAN VIEW

NOTES

1. SIDEWALKS SHALL BE PER MAG DETAIL 230 WITH A MINIMUM 6-FOOT WIDTH UNLESS OTHERWISE APPROVED BY THE CITY. SIDEWALKS AT BRIDGE STRUCTURES SHALL HAVE A MINIMUM WIDTH OF 8-FEET UNLESS OTHERWISE APPROVED BY THE CITY.
2. ATTACHED SIDEWALK OR REDUCED SIDEWALK SETBACK MAY BE ALLOWED IN CASES WHERE RIGHT OF WAY OR EASEMENTS ARE LIMITED.
3. IN THOSE LOCATIONS WHERE THIS DETAIL CANNOT BE APPLIED BECAUSE OF EXISTING CONDITIONS, REFER TO MAG DETAIL 230 FOR MINIMUM SIDEWALK SETBACK.
4. THIS DETAIL IS A GUIDE FOR INSTALLATION OF DETACHED SIDEWALKS. EACH PROJECT SITE SHALL BE REVIEWED FOR FINAL APPROVAL BY THE CITY OF MESA.
5. THE BACK OF R/W OR PUFE SHALL EXTEND 2' MINIMUM BEYOND THE BACK OF SIDEWALK ALONG THE BACK OF THE DRIVEWAY, UNLESS OTHERWISE APPROVED BY THE CITY.
6. MAX. 6:1 SLOPE ALLOWED EXCEPT WHERE AREA ADJACENT TO R/W OR SIDEWALK HAS 3' MIN. AREA AT SLOPE OF 6:1 OR LESS. THEN SLOPE BEYOND SAID 3' AREA CAN BE INCREASED TO A MAX. OF 4:1.

NOT TO SCALE

mesa·az

DETACHED SIDEWALK ON ARTERIAL AND COLLECTOR STREETS

DETAIL NO.
M-43

REV. 01/31/14

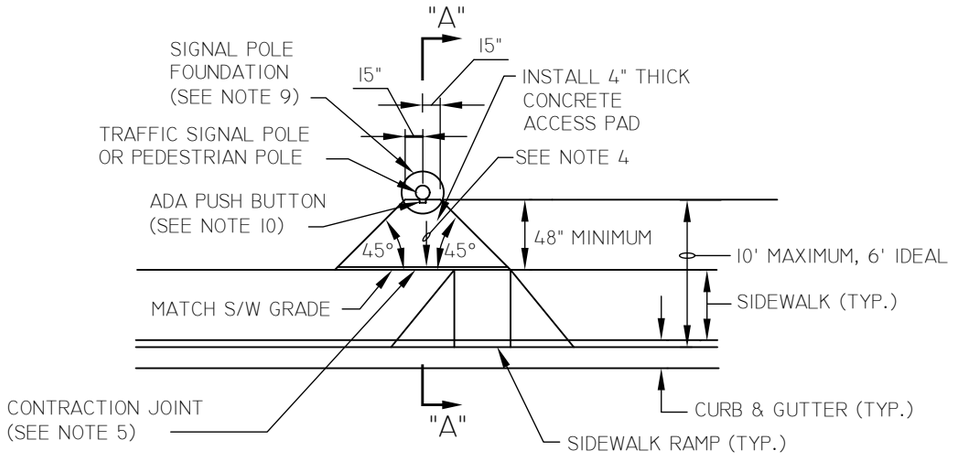

DETAIL 1

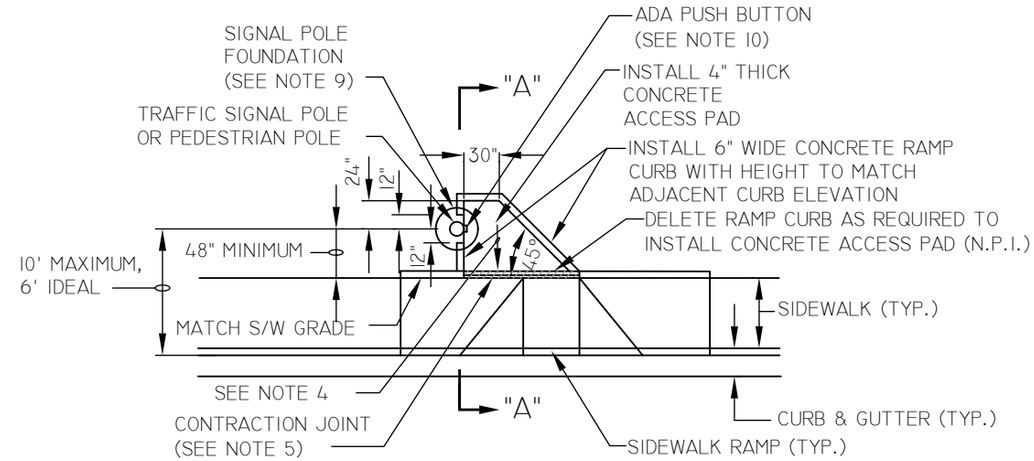

DETAIL 2

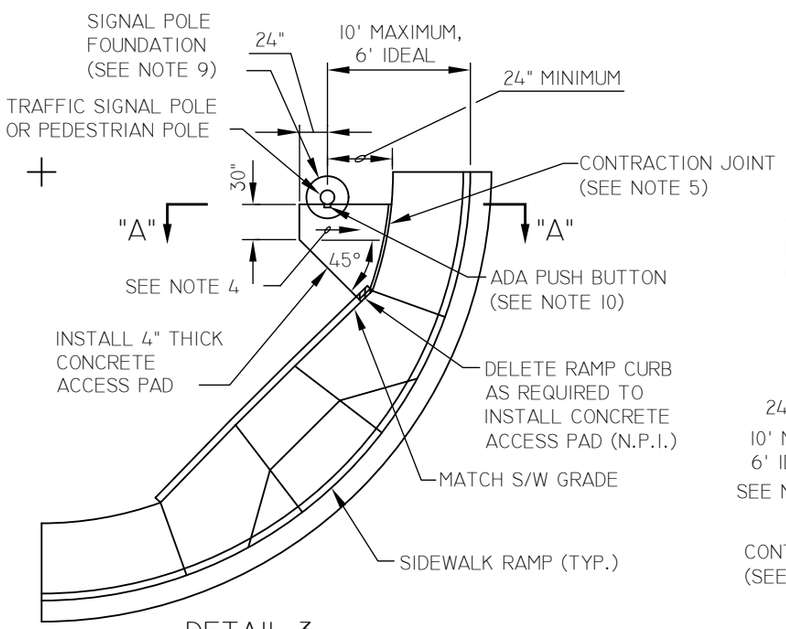

DETAIL 3

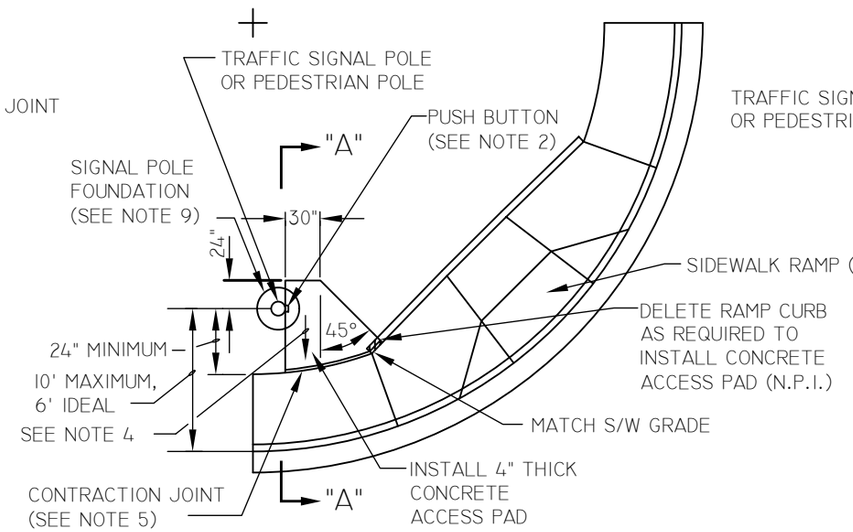

DETAIL 4

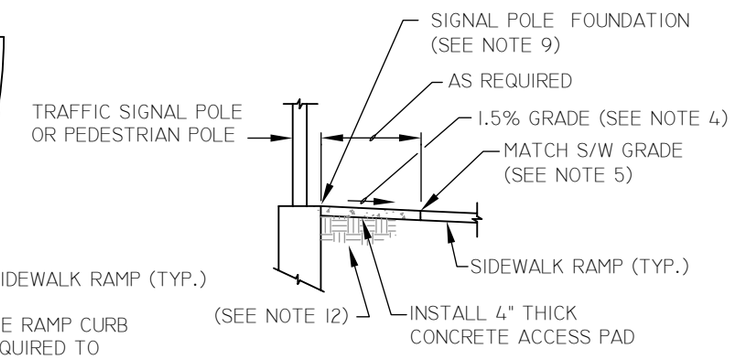

SECTION "A"-"A"

SEE M-44.01.2 FOR REFERENCED NOTES

NOT TO SCALE

mesa·az

RETROFIT ADA PUSH BUTTON ACCESS PAD DETAILS

DETAIL NO.
M-44.01.1

REV. 01/31/14

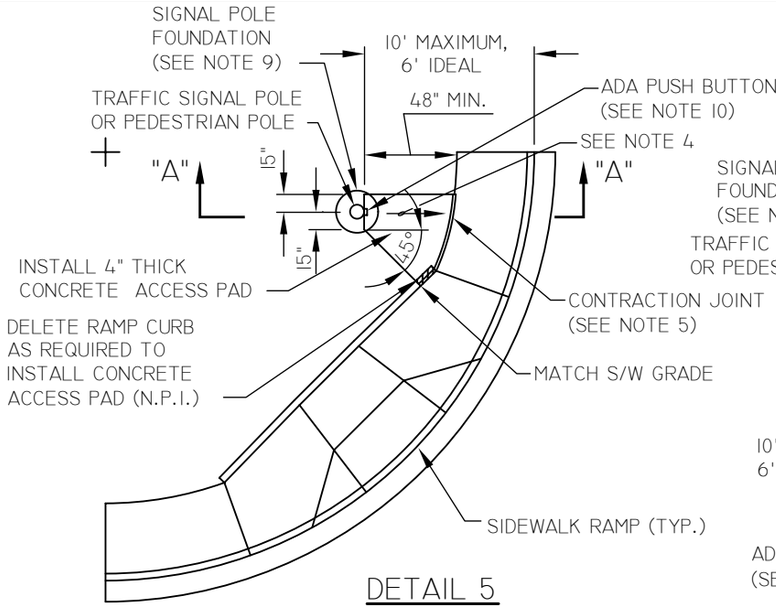

DETAIL 5

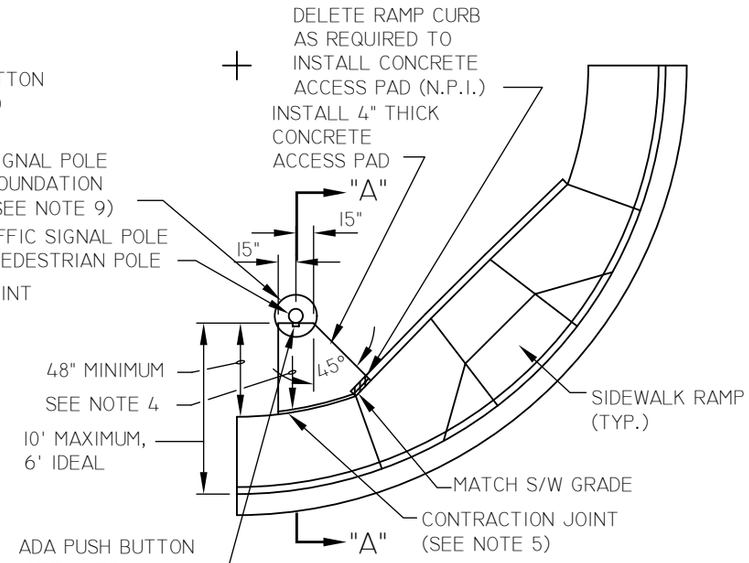

DETAIL 6

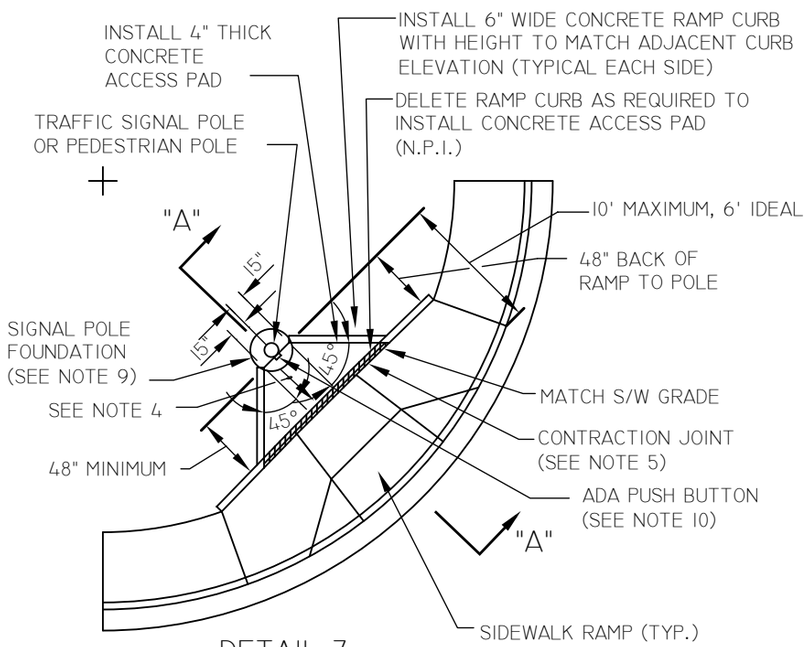

DETAIL 7

NOTES

1. INSTALL CONCRETE ACCESS PAD IN ACCORDANCE TO THE REQUIREMENTS SPECIFIED IN MAG DETAIL 230 FOR SIDEWALK INSTALLATIONS.
2. THE CONCRETE ACCESS PAD SHALL PROVIDE A MINIMUM 30"x48" CONCRETE SURFACE ADJACENT TO THE ADA PUSH BUTTON AS SHOWN.
3. ALL CONCRETE SHALL BE CLASS "B" PER MAG STANDARD SPECIFICATIONS SECTION 725.
4. SLOPE CONCRETE ACCESS PADS 1.5% TOWARDS SIDEWALK FOR DRAINAGE PURPOSES.
5. INSTALL CONTRACTION JOINT BETWEEN CONCRETE ACCESS PAD AND SIDEWALK RAMP. IF SIDEWALK RAMP IS EXISTING, INSTALL EXPANSION JOINT IN LIEU OF CONTRACTION JOINT.
6. GRADE SOILS AT A 6:1 MAX. SLOPE AT PERIMETER OF CONCRETE ACCESS PAD TO MATCH EXISTING, UNLESS OTHERWISE NOTED.
7. THE TYPICAL DETAILS SHOWN ON THIS SHEET MAY REQUIRE MODIFICATIONS TO ACCOMMODATE EXISTING FIELD CONDITIONS AS DIRECTED BY THE CITY INSPECTOR.
8. NEW CONCRETE ACCESS PAD SHALL NOT COVER OR INTERFERE WITH TRAFFIC SIGNAL OR PEDESTRIAN POLE MOUNTINGS.
9. TOP OF SIGNAL POLE FOUNDATION SHALL MATCH CONCRETE ACCESS PAD (SEE COM DETAIL M-44.01.1 SECTION "A"-"A").
10. SEE COM DETAIL M-95.04 FOR ADA PUSH BUTTON DETAIL.
11. PAYMENT FOR ADA PUSH BUTTON ACCESS PADS SHALL BE INCLUDED IN THE BID ITEM FOR SIDEWALK RAMP INSTALLATION, UNLESS OTHERWISE NOTED.
12. SOIL UNDER CONCRETE ACCESS PAD SHALL BE COMPACTED PER SIDEWALK COMPACTION REQUIREMENTS.

NOT TO SCALE

mesa·az

RETROFIT ADA PUSH BUTTON ACCESS PAD DETAILS

DETAIL NO.
M-44.01.2

REV. 01/31/14

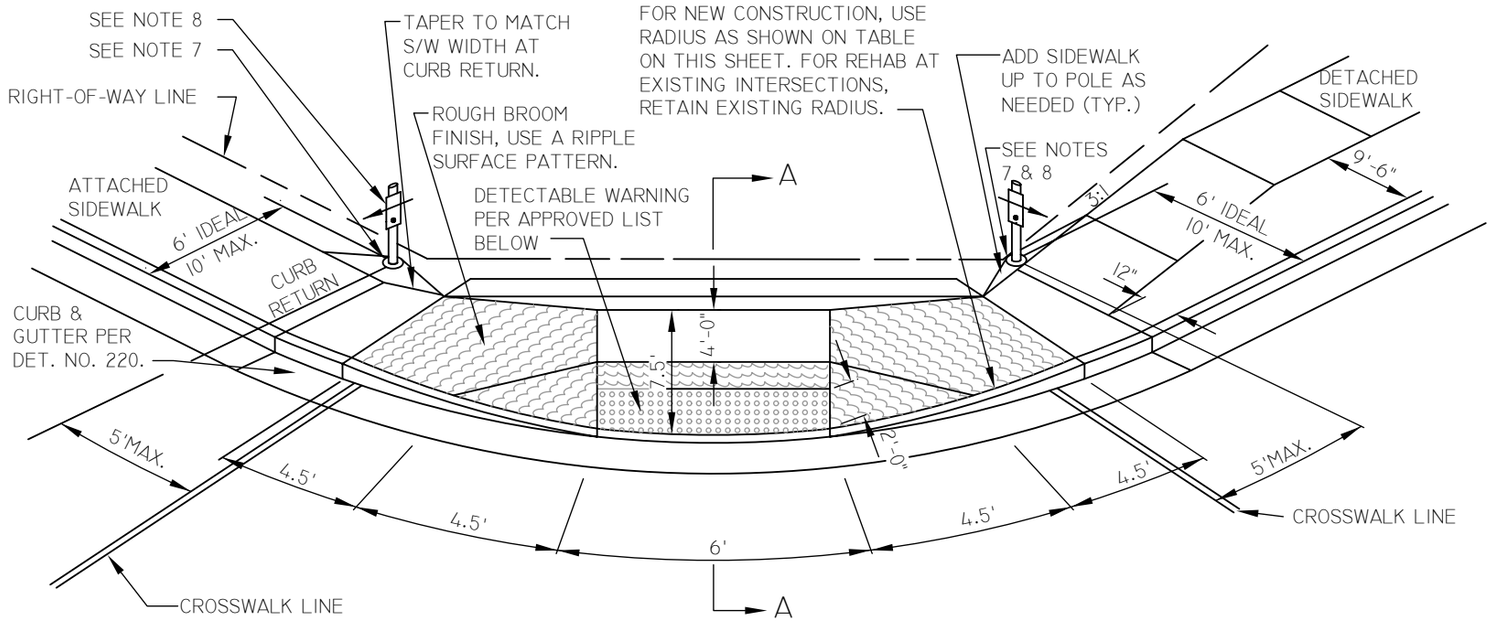

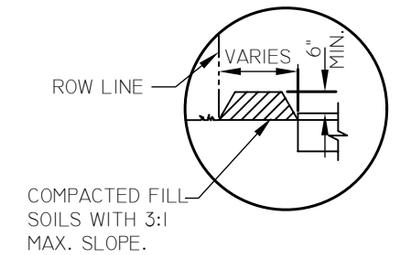

ALTERNATE FILL SOIL DETAIL

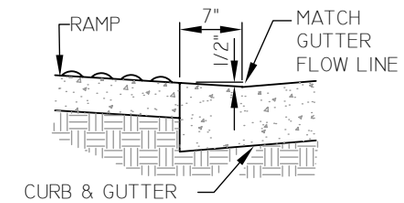

DETAIL 1

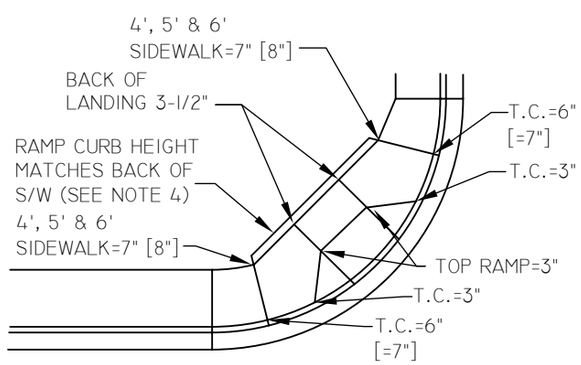

CONTROL ELEVATIONS

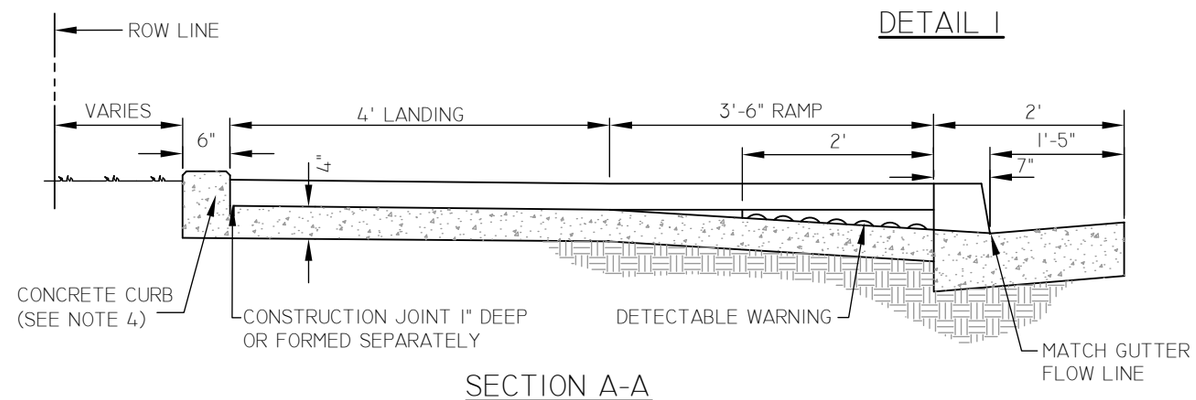

SECTION A-A

SEE M-44.02.2 FOR REFERENCED NOTES

NOT TO SCALE

SIDEWALK RAMPS - TYPE A

DETAIL NO. M-44.02.1

REV. 01/31/14

APPROVED DETECTABLE WARNING PRODUCTS (TRUNCATED DOMES)

1. STANDARD COLOR SHALL BE RED (FEDERAL COLOR NO. 20109 OR EQUIVALENT). STANDARD COLOR SHALL BE USED UNLESS OTHERWISE DIRECTED.

2. ONLY THOSE PRODUCTS LISTED ON THE CITY OF MESA'S APPROVED LIST OF DETECTABLE WARNING PRODUCTS (TRUNCATED DOMES) MAY BE USED. NO SUBSTITUTIONS ARE PERMITTED. THE APPROVED LIST IS AVAILABLE ON THE ENGINEERING WEB SITE AT HTTP://WWW.MESAAZ.GOV/ENGINEERING/APPROVEDPRODUCTSLIST.ASPX.

NEW CONSTRUCTION INTERSECTION TYPE	CORNER RADIUS (TO FC)	RAMP TYPE
LOCAL STREET INTERSECTING A LOCAL, COLLECTOR OR ARTERIAL	20.5'	A-COM DETAIL M-44.02
COLLECTOR STREET INTERSECTING A COLLECTOR OR ARTERIAL	20.5'	C-COM DETAIL M-44.03
MAJOR COLLECTOR STREET INTERSECTING A MAJOR COLLECTOR OR ARTERIAL	25.5'	C-COM DETAIL M-44.03
4-LANE ARTERIAL INTERSECTING A 4-LANE ARTERIAL (M-46.01 & M-46.02)	25.5'	C-COM DETAIL M-44.04
4-LANE ARTERIAL INTERSECTING A 6-LANE ARTERIAL	25.5'	B-COM DETAIL M-44.03
6-LANE ARTERIAL INTERSECTING A 6-LANE ARTERIAL (M-46.03 & M-46.04)	30.5'	B-COM DETAIL M-44.03

NOTES

1. CONTROL ELEVATIONS SHOWN ARE IN RELATION TO THE GUTTER AND ARE LOCATED RADIALLY. GUTTER EL.=0.

2. CLASS 'B' CONC. CONSTRUCTION AS PER SECTION 725.

3. WHEN CURB HEIGHTS OF 7" ARE SHOWN ON PLANS, USE DIMENSIONS SHOWN IN [ ]'S.

4. CONCRETE CURB SHALL BE DELETED AND REPLACED WITH COMPACTED FILL SOILS PER ALTERNATE FILL SOIL DETAIL WHEN IN CONFLICT WITH EXISTING IMPROVEMENTS OR WITH EXISTING R.O.W. LINE.

5. FOR NEW CONSTRUCTION, USE OF TYPE B RAMPS SHALL BE IN ACCORDANCE WITH THE TABLE ON THIS SHEET.

6. REHABILITATION OR RETROFITTING EXISTING CORNERS MAY REQUIRE MODIFYING THIS RAMP. MODIFICATIONS MAY BE MADE AS OUTLINED IN THE CITY OF MESA ENGINEERING AND DESIGN STANDARDS.

7. TOP OF SIGNAL POLE FOUNDATION SHALL MATCH CONCRETE ACCESS PAD (SEE SECTION A-A ON COM DETAIL M-44.01)

8. IF PEDESTRIAN PUSH BUTTON CANNOT BE PLACED ON SIGNAL POLE PER THESE REQUIREMENTS, THEN USE A PEDESTRIAN SIGNAL POLE & PUSH BUTTON PER COM DETAILS M-94.01 & M-95.02.

9. TWO PEDESTRIAN PUSH BUTTONS ON A CORNER SHALL BE SEPARATED BY A MINIMUM OF 10 FEET.

10. MAXIMUM DISTANCE BETWEEN PEDESTRIAN PUSH BUTTON FACE & ACCESSIBLE APPROACH SHALL BE 10 INCHES.

mesa·az

SIDEWALK RAMPS - TYPE A - NOTES

DETAIL NO.
M-44.02.2

REV. 01/31/14

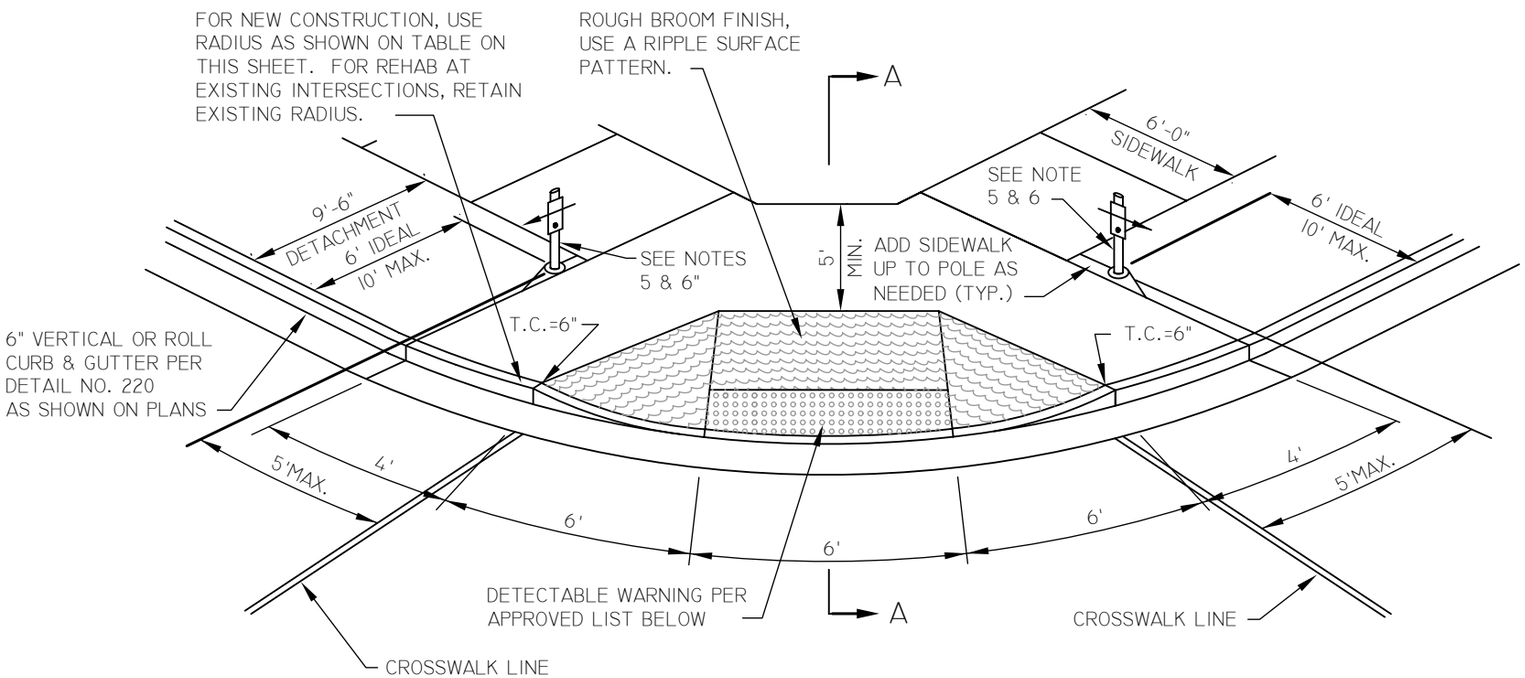

NOTES

1. CONTROL ELEVATIONS SHOWN ARE IN RELATION TO THE GUTTER AND ARE LOCATED RADIALLY. GUTTER EL.=0.
2. CLASS 'B' CONC. CONSTRUCTION AS PER SECTION 725.
3. FOR NEW CONSTRUCTION, USE OF TYPE B RAMPS SHALL BE IN ACCORDANCE WITH THE TABLE ON THIS SHEET.
4. REHABILITATION OR RETROFITTING EXISTING CORNERS MAY REQUIRE MODIFYING THIS RAMP. MODIFICATIONS MAY BE MADE AS OUTLINED IN THE CITY OF MESA ENGINEERING AND DESIGN STANDARDS.
5. TOP OF SIGNAL POLE FOUNDATION SHALL MATCH CONCRETE ACCESS PAD (SEE SECTION A-A ON COM DETAIL M-44.01)
6. IF PEDESTRIAN PUSH BUTTON CANNOT BE PLACED ON SIGNAL POLE PER THESE REQUIREMENTS, THEN USE A PEDESTRIAN SIGNAL POLE & PUSH BUTTON PER COM DETAILS M-94.01 & M-95.02.
7. TWO PEDESTRIAN PUSH BUTTONS ON A CORNER SHALL BE SEPARATED BY A MINIMUM OF 10 FEET.
8. MAXIMUM DISTANCE BETWEEN PEDESTRIAN PUSH BUTTON FACE & ACCESSIBLE APPROACH SHALL BE 10 INCHES.

APPROVED DETECTABLE WARNING PRODUCTS (TRUNCATED DOMES)

1. STANDARD COLOR SHALL BE RED (FEDERAL COLOR NO. 20109 OR EQUIVALENT). STANDARD COLOR SHALL BE USED UNLESS OTHERWISE DIRECTED.
2. ONLY THOSE PRODUCTS LISTED ON THE CITY OF MESA'S APPROVED LIST OF DETECTABLE WARNING PRODUCTS (TRUNCATED DOMES) MAY BE USED. NO SUBSTITUTIONS ARE PERMITTED. THE APPROVED LIST IS AVAILABLE ON THE ENGINEERING WEB SITE AT HTTP://WWW.MESAAZ.GOV/ENGINEERING/APPROVEDPRODUCTSLIST.ASPX.

NEW CONSTRUCTION INTERSECTION TYPE	CORNER RADIUS (TO FC)	RAMP TYPE
LOCAL STREET INTERSECTING A LOCAL, COLLECTOR OR ARTERIAL	20.5'	A-COM DETAIL M-44.02
COLLECTOR STREET INTERSECTING A COLLECTOR OR ARTERIAL	20.5'	C-COM DETAIL M-44.03
MAJOR COLLECTOR STREET INTERSECTING A MAJOR COLLECTOR OR ARTERIAL	25.5'	C-COM DETAIL M-44.03
4-LANE ARTERIAL INTERSECTING A 4-LANE ARTERIAL (M-46.01 & M-46.02)	25.5'	C-COM DETAIL M-44.04
4-LANE ARTERIAL INTERSECTING A 6-LANE ARTERIAL	25.5'	B-COM DETAIL M-44.03
6-LANE ARTERIAL INTERSECTING A 6-LANE ARTERIAL (M-46.03 & M-46.04)	30.5'	B-COM DETAIL M-44.03

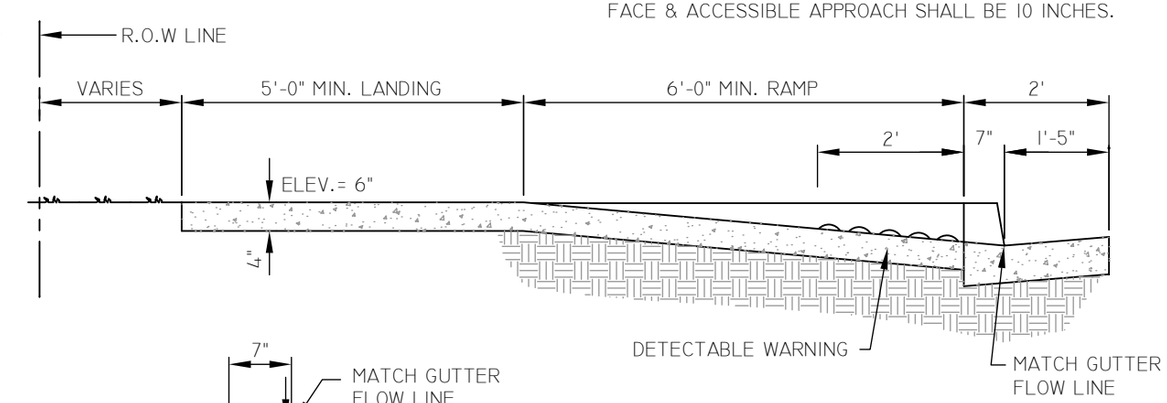

SECTION A-A

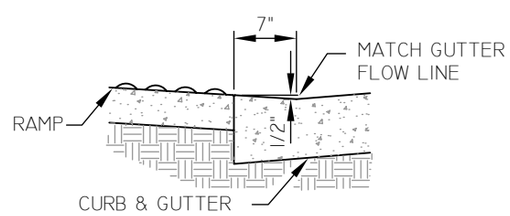

DETAIL 1

NOT TO SCALE

SIDEWALK RAMPS - TYPE B

DETAIL NO. M-44.03

REV. 01/31/14

THIS SHEET INTENTIONALLY LEFT BLANK

mesa·az

RESERVED

DETAIL NO.
M-44.04

REV. 02/04/13

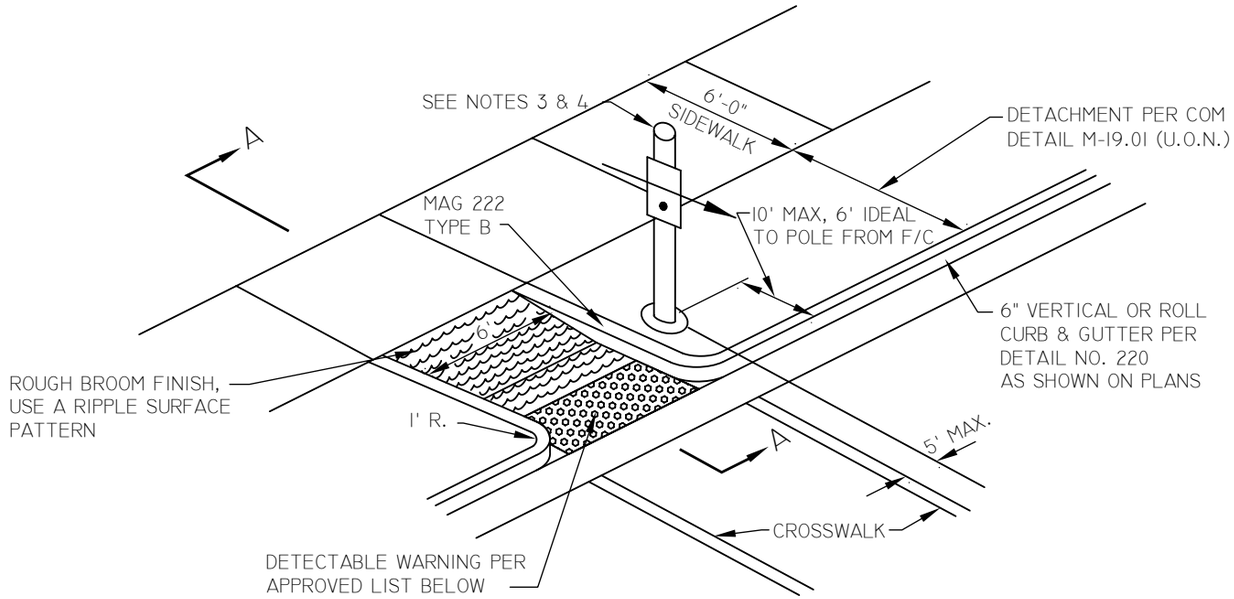

NOTES

1. TYPE 'D' RAMP TO BE USED AT MID-BLOCK AND TEE INTERSECTIONS.
2. CLASS 'B' CONCRETE PER MAG SECTION 725.
3. TOP OF SIGNAL POLE FOUNDATION SHALL MATCH CONCRETE ACCESS PAD (SEE SECTION A-A ON COM DETAIL M-44.01).
4. IF PEDESTRIAN PUSH BUTTON CANNOT BE PLACED ON SIGNAL POLE PER THESE REQUIREMENTS, THEN USE A PEDESTRIAN SIGNAL POLE & PUSH BUTTON PER COM DETAILS M-94.01 & M-95.02.
5. MAXIMUM DISTANCE BETWEEN PEDESTRIAN PUSH BUTTON FACE & ACCESSIBLE APPROACH SHALL BE 10 INCHES.

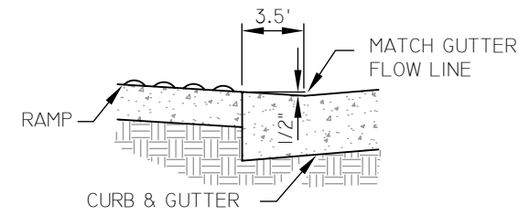

DETAIL 1

APPROVED DETECTABLE WARNING PRODUCTS (TRUNCATED DOMES)

1. STANDARD COLOR SHALL BE RED (FEDERAL COLOR NO. 20109 OR EQUIVALENT). STANDARD COLOR SHALL BE USED UNLESS OTHERWISE DIRECTED.
2. ONLY THOSE PRODUCTS LISTED ON THE CITY OF MESA'S APPROVED LIST OF DETECTABLE WARNING PRODUCTS (TRUNCATED DOMES) MAY BE USED. NO SUBSTITUTIONS ARE PERMITTED. THE APPROVED LIST IS AVAILABLE ON THE ENGINEERING WEB SITE AT HTTP://WWW.MESAAZ.GOV/ENGINEERING/APPROVEDPRODUCTSLIST.ASPX.

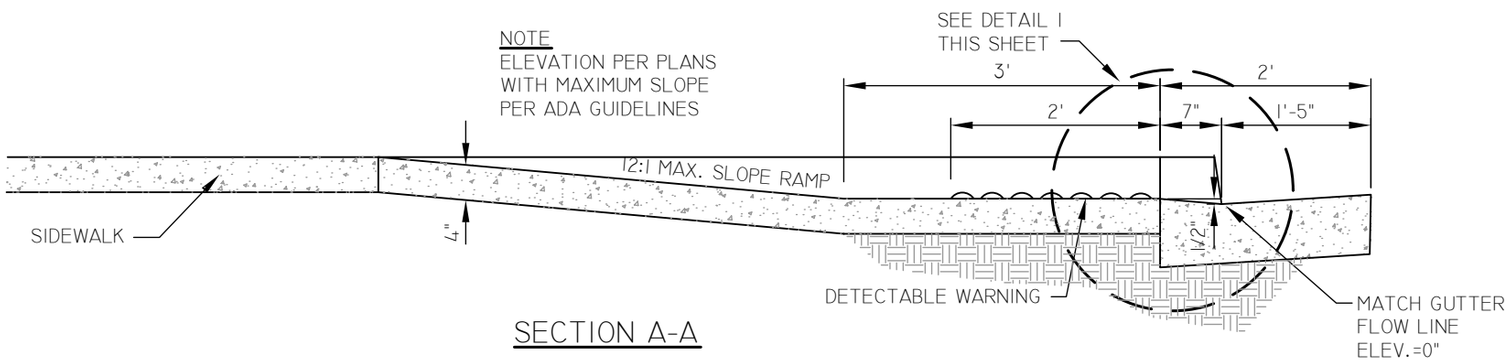

SECTION A-A

NOT TO SCALE

mesa·az

SIDEWALK RAMPS - TYPE D

DETAIL NO.
M-44.05

REV. 02/12/2015

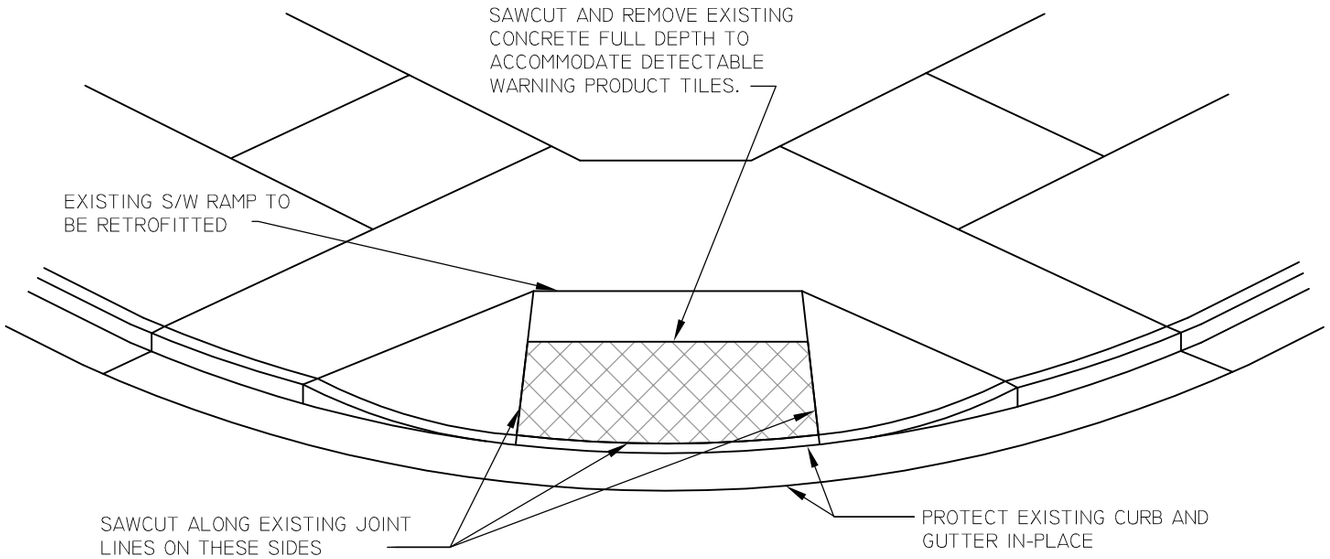

DEMOLITION PLAN

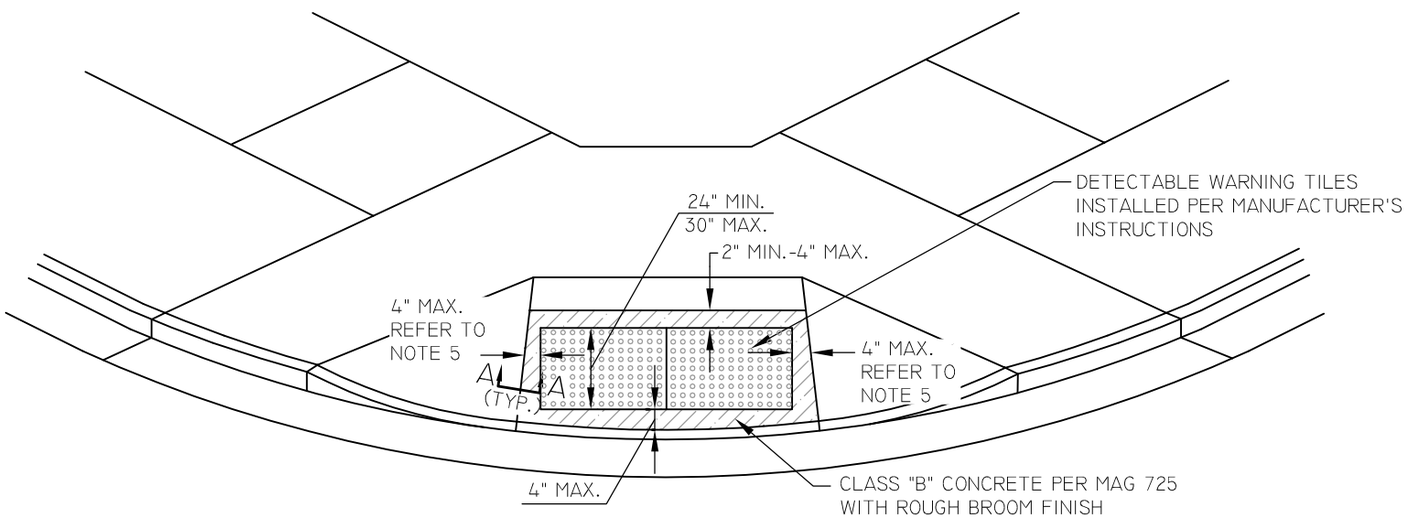

INSTALLATION PLAN

NOTES

1. THIS DETAIL SHALL BE USED ONLY TO ADD DETECTABLE WARNING SURFACES TO EXISTING RAMPS THAT OTHERWISE ALREADY COMPLY WITH ADA REQUIREMENTS. IF THE RAMP DOES NOT OTHERWISE COMPLY WITH ADA, MODIFICATION OR FULL REPLACEMENT PER OTHER SIDEWALK RAMP DETAILS IN MESA'S STD DETAILS BOOK WILL BE REQUIRED.
2. THE NEW CONCRETE AND THE SURFACE OF THE DETECTABLE WARNING TILES ARE TO BE INSTALLED FLUSH WITH THE SURROUNDING CONCRETE ON ALL SIDES & EDGES SO AS TO CREATE NO TRIP HAZARDS. ONLY THE DOMES THEMSELVES SHALL PROTRUDE ABOUT SAID PLANE.
3. REFER TO THE CITY OF MESA'S APPROVED PRODUCT LIST AVAILABLE AT WWW.MESAAZ.GOV/ENGINEERING/APPROVEDPRODUCTSLIST.ASPX FOR A LIST OF THE TRUNCATED DOME PRODUCTS THAT ARE ACCEPTABLE FOR USE WITH THIS DETAIL.
4. COLOR OF TILES SHALL BE RED (FEDERAL COLOR NO. 20109 OR EQUIVALENT) UNLESS OTHERWISE DIRECTED BY THE CITY.
5. CENTER TRUNCATED DOME TILES WITHIN LANDING AREA LEFT-TO-RIGHT.

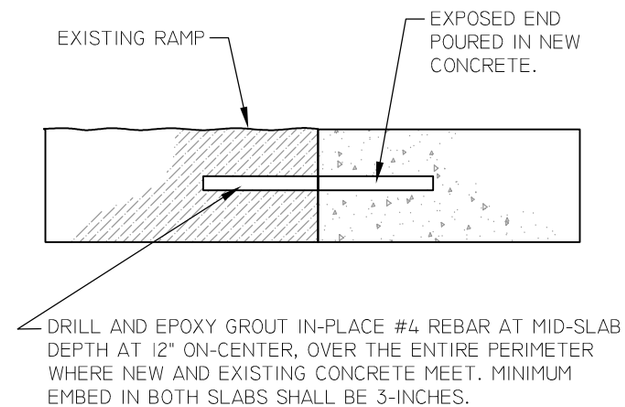

SECTION

NOT TO SCALE

mesa·az

RETROFIT EXISTING RAMP WITH DETECTABLE WARNING SURFACE

DETAIL NO. M-44.06

REV. 01/31/14

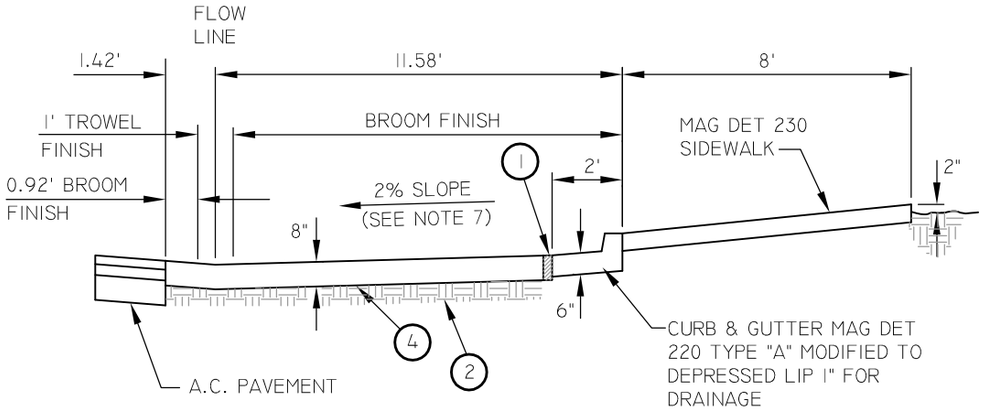

SECTION B-B

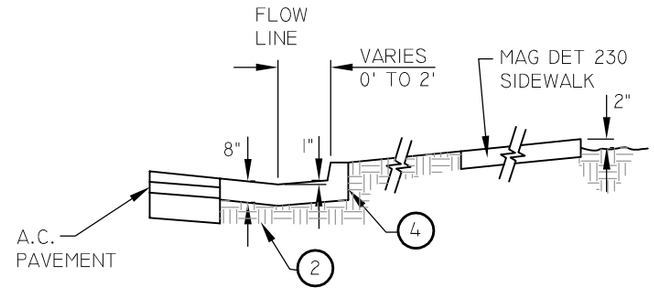

SECTION A-A

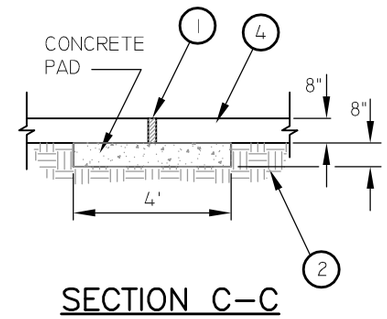

SECTION C-C

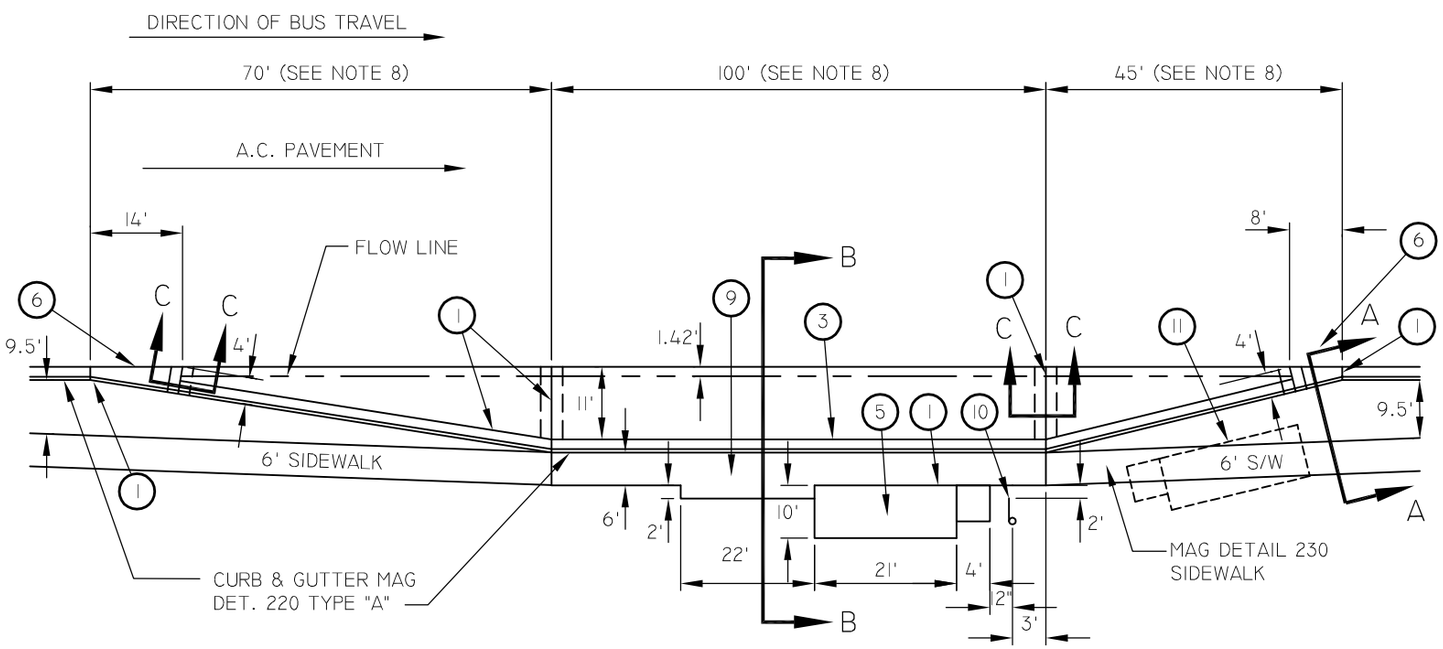

PLAN VIEW

NOTES

1. 1/2" BITUMINOUS PREFORMED EXPANSION JOINT FILLER, ASTM D-1751 PER MAG SECTION 729.
2. SUBGRADE PREPARATION PER MAG SECTION 301.
3. CONTRACTION JOINTS IN THE BUS PULLOUT PAVEMENT SHALL MATCH THOSE IN THE CURB.
4. CONCRETE SHALL BE CLASS "A" PER MAG SECTION 725.
5. BUS SHELTER PAD AND SHELTER PER COM DETAILS M-45.02.1 THROUGH M-45.07.4 IF REQUIRED BY PLANS.
6. PAVEMENT TRANSITION. (SEE SECTION A-A)
7. CROSS SLOPE SHALL BE 2% UNLESS OTHERWISE NOTED ON PLANS.
8. BUS PULLOUT DIMENSIONS MAY BE REVISED UPON WRITTEN APPROVAL OF THE CITY.
9. WHEEL CHAIR PAD PER COM DETAIL M-45.02 (CONSTRUCT PER MAG DETAIL 230).
10. BUS STOP SIGN
11. ALTERNATE SHELTER PAD LOCATION. SEE M-45.01.2.

NOT TO SCALE

mesa·az

BUS PULLOUT DETAIL

DETAIL NO. M-45.01.1

REV. 04/07/2015

GENERAL NOTES

1. THIS ALTERNATE SHELTER LOCATION MAY ONLY BE USED IF SITE CONSTRAINTS PROHIBIT THE USE OF THE PREFERRED LOCATION SHOWN ON M-45.01.1 AND WITH APPROVAL BY COM TRANSIT SERVICES.

2. SEE M-45.01.1 FOR NOTES AND DETAILS NOT SHOWN.

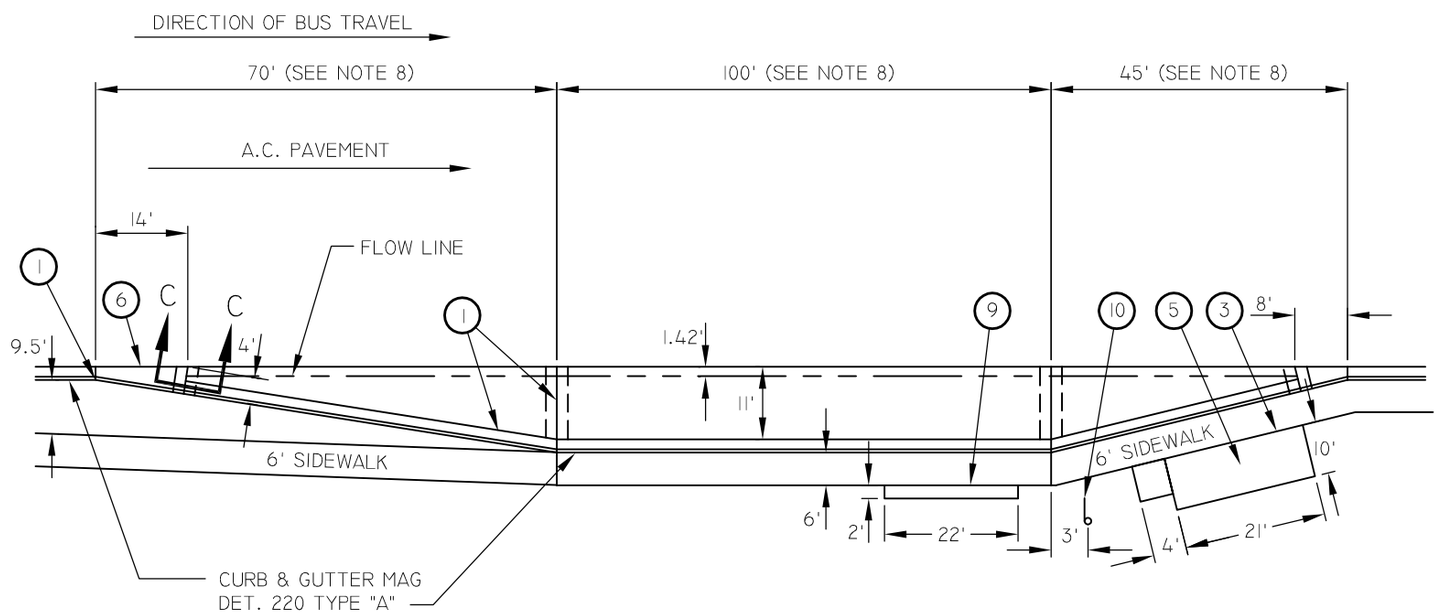

PLAN VIEW

SEE M-45.01.1 FOR REFERENCED CALLOUTS

NOT TO SCALE

mesa·az

BUS SHELTER PULLOUT DETAIL - ALTERNATE

DETAIL NO.
M-45.01.2

REV. 03/31/2015

NOTE
ALL T.S. FRAMES & INFILL PANELS TO BE PAINTED TO MATCH SHERWIN-WILLIAMS COLOR "DECK RED".

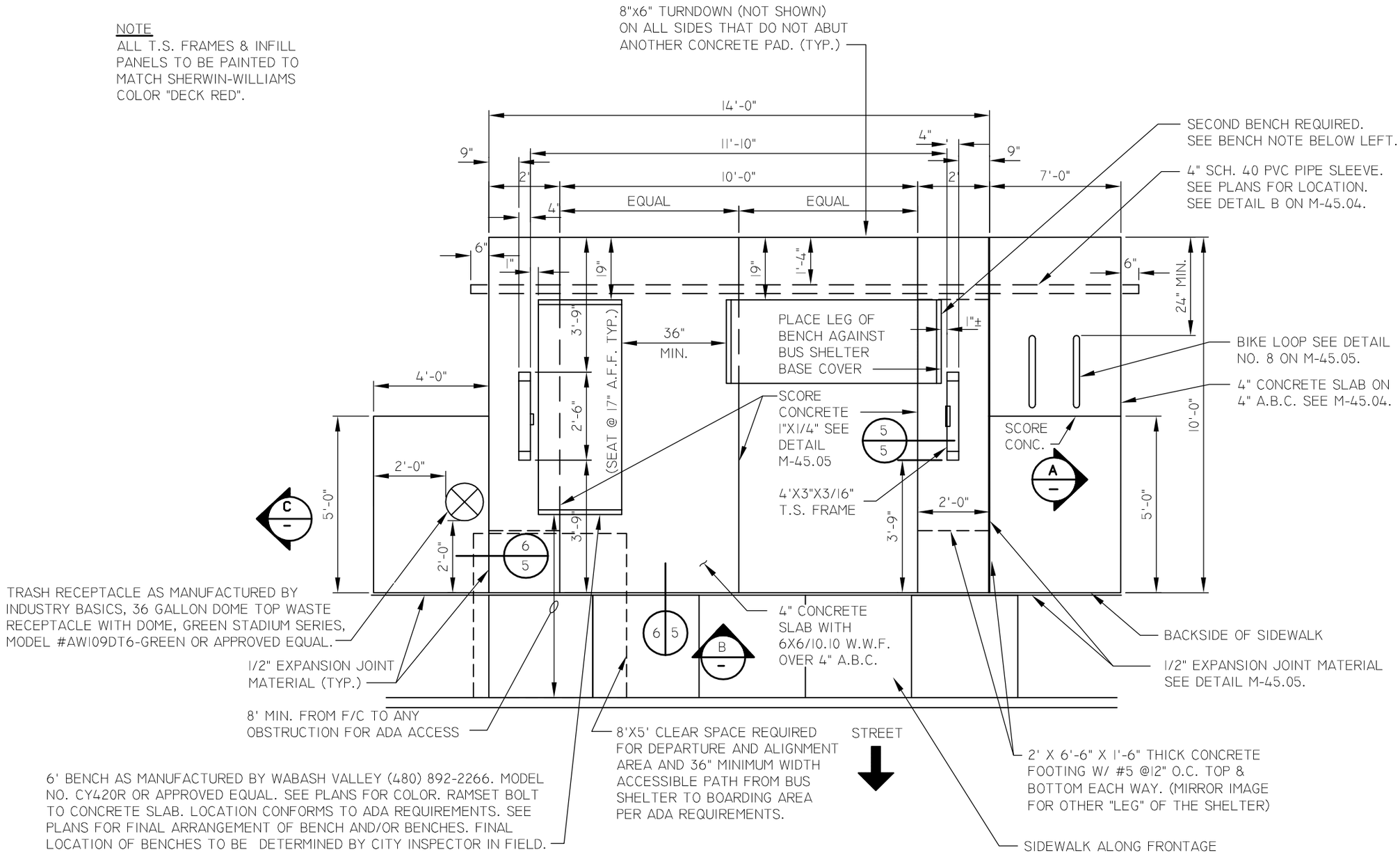

FLOOR PLAN / FOUNDATION PLAN

mesa·az

STANDARD BUS SHELTER - FLOOR PLAN

DETAIL NO.
M-45.02.1

REV. 04/07/2015

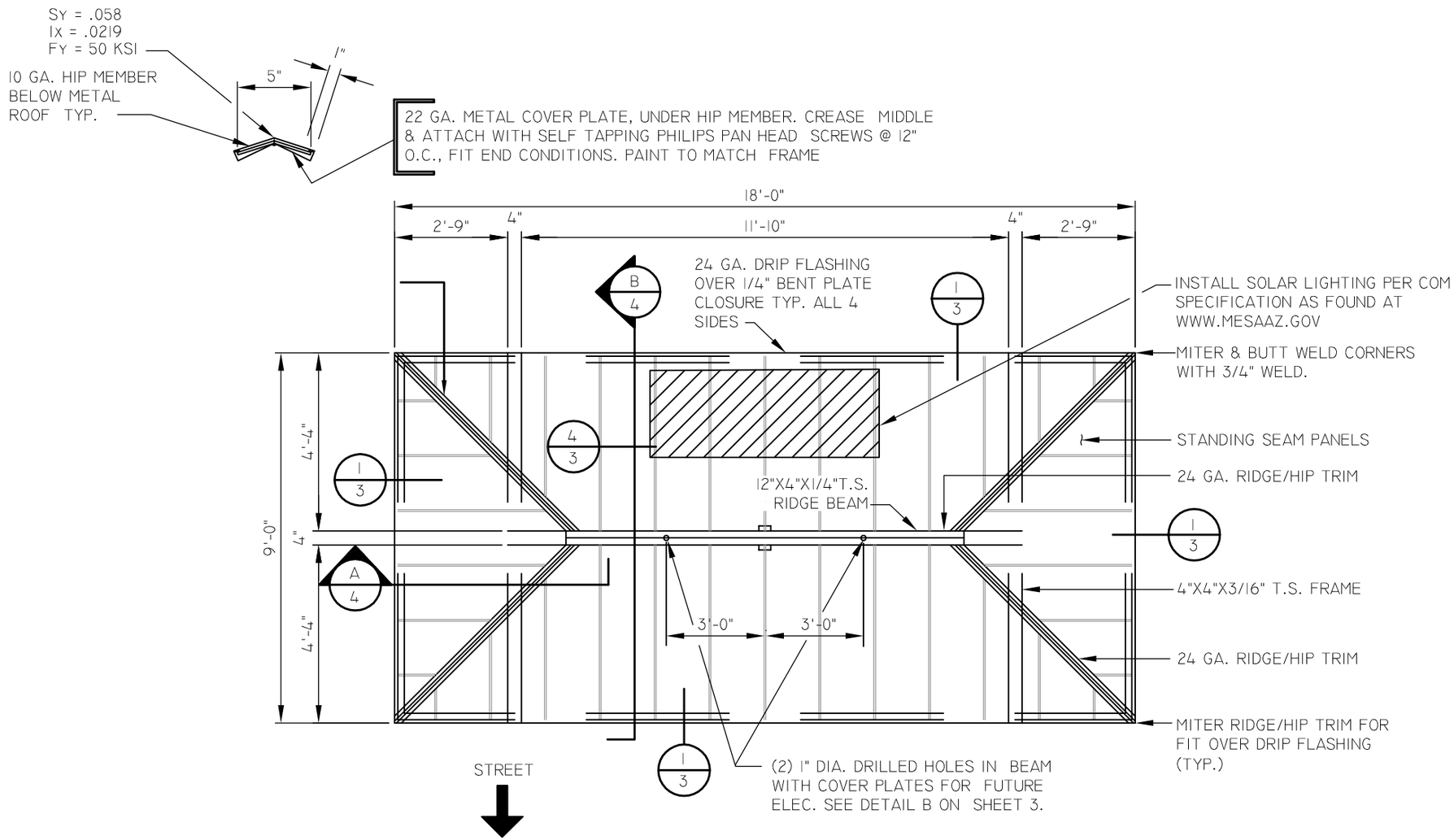

ROOF PLAN

mesa·az

STANDARD BUS SHELTER - ROOF PLAN

DETAIL NO.
M-45.02.2

REV. 01/31/14

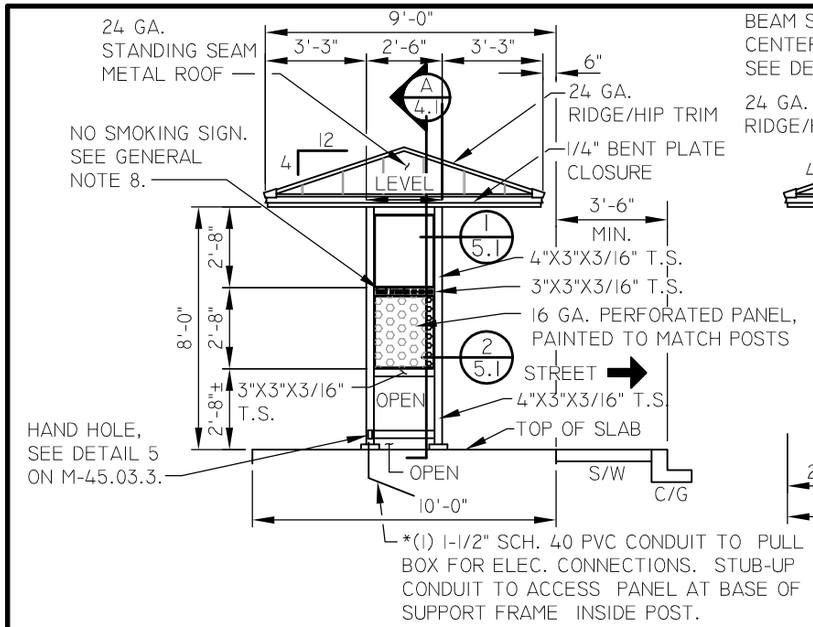

LEFT ELEVATION

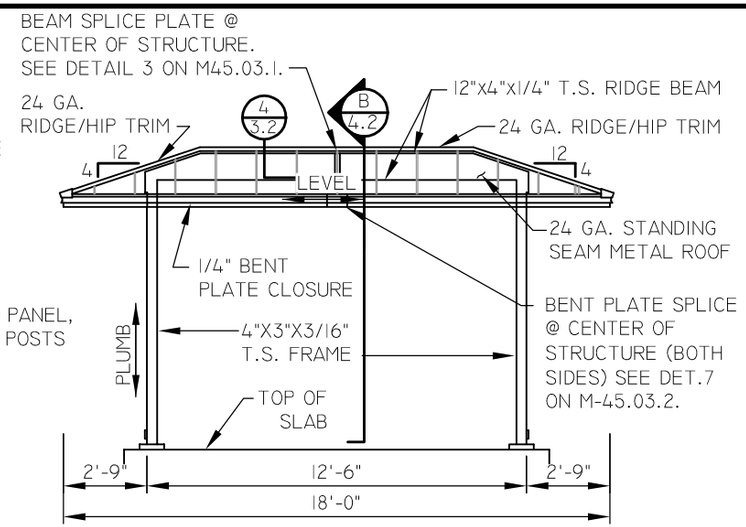

FRONT ELEVATION

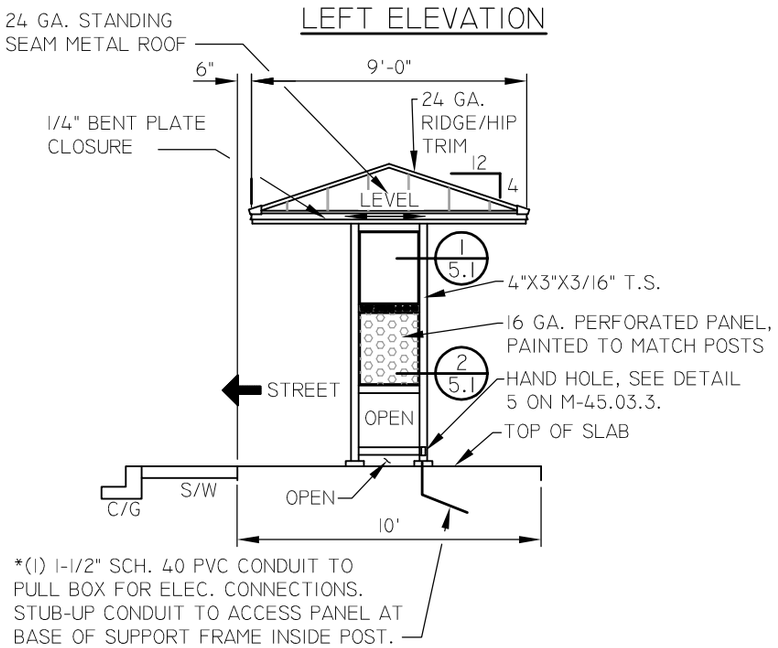

RIGHT ELEVATION

PAINTING NOTES

ALL PAINTING IS RESTRICTED TO A CONTROLLED SHOP SETTING WITHIN MARICOPA COUNTY.

CARBOLINE PRODUCTS AVAILABLE FROM DUNN-EDWARDS PAINTS (OR APPROVED EQUAL)

FINISH: HIGH GLOSS

FINISH SYSTEM:
TWO COATS PRIMER (MINIMUM): CARBOGUARD 888 EPOXY POLYAMIDE

SOLIDS BY VOLUME: 63% ± 2%

DRY FILM THICKNESS: 3.0-5.0 MIL PER COAT

TWO COATS FINISH (MINIMUM):
CARBOTHANE 134 HB TWO-COMPONENT, ACRYLIC, ALIPHATIC POLYURETHANE

SOLIDS BY VOLUME: 54% ± 2%

DRY FILM THICKNESS: 3.0-5.0 MIL PER COAT

CITY OF MESA ENGINEERING DEPARTMENT

GENERAL NOTES

1. CONCRETE PAD IS "CLASS-B" (TYP.) A.B.C. IS COMPACTED TO MIN. 95% (TYP.)
2. NATIVE SOIL UNDER A.B.C. IS COMPACTED TO MIN. 95% (TYP.)
3. CONCRETE FOOTER IS "CLASS-B" (TYP.)
4. NATIVE SOIL UNDER FOOTER IS COMPACTED TO MIN. 95 % (TYP.)
5. FINISH CONCRETE PAD WITH A MEDIUM BROOM TEXTURE
6. SEE PLANS FOR PAD GRADES
7. INSPECTION REQUIRED FOR ADHESIVE ANCHOR SYSTEM - SEE DETAILS 2 & 6 ON M-45.03.1 & M-45.03.2, RESPECTIVELY.
8. THE INTERNATIONAL "NO SMOKING" SIGN SHALL FEATURE THE 3-INCH DIAMETER SYMBOL IN TWO COLORS, RED & BLACK, WITH A WHITE BACKGROUND SILK SCREENED ONTO A 1/16-INCH THICK SHEET METAL BASE CUT TO A 4-INCH SQUARE. THE SIGN SHALL BE ATTACHED AT 57-INCHES ABOVE FINISH FLOOR CENTERED ON THE LOWER INFILL PANEL (OPPOSITE OF THE TELEPHONE LOCATION) ON THE INSIDE OF THE BUS SHELTER WITH 4 NON-REMOVABLE POP RIVETS AT EACH CORNER.

BUILDING INFORMATION

GOVERNING CODE	1994 UBC	
SEISMIC ZONE	2	
SOIL BEARING	1500 PSF	
CONCRETE (ALL)	2500 PSI	
METALS		
ROLLED SHAPES AND PLATES		FY=36 KSI
PIPES		FY=36 KSI
STRUCTURAL TUBING		FY=46 KSI
1/4" BENT PLATE CLOSURE		FY=50 KSI
CONSTRUCTION TYPE	II-N	SHELTER IS SHOP
OCCUPANCY	B	FABRICATED

SHELTER DESIGN COMPLIES WITH A.D.A.G.
SECTIONS 10.1 THRU 10.4.1

SEE DRAWING NO. A-68000 & A-68000A FOR STRUCTURAL CALCULATIONS

ELECTRICAL FACILITIES N.I.C. UNLESS SPECIFICALLY STATED ON PLANS

SBS-12/97

MASTER PLAN REGISTRATION

mesa·az

STANDARD BUS SHELTER - ELEVATIONS AND NOTES

DETAIL NO.
M-45.02.3

REV. 03/30/2015

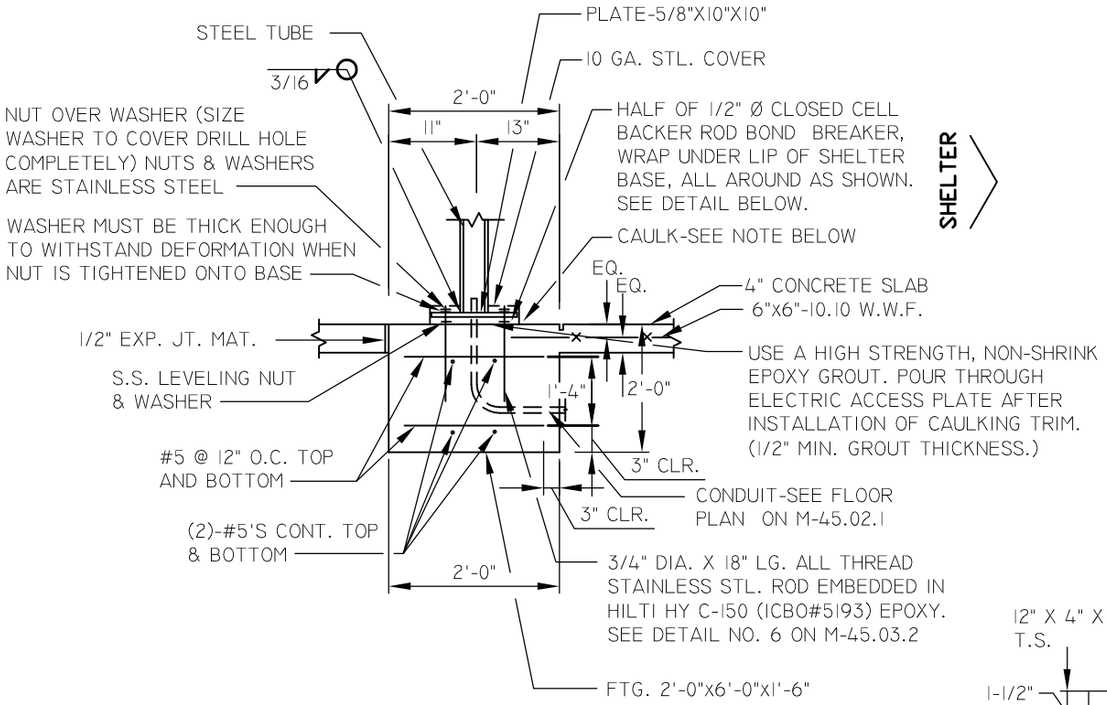

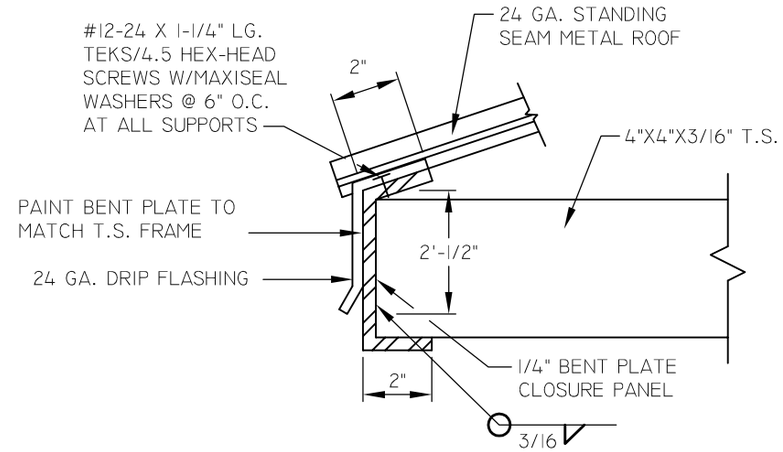

1 TYPICAL CLOSURE CONNECTION DETAIL

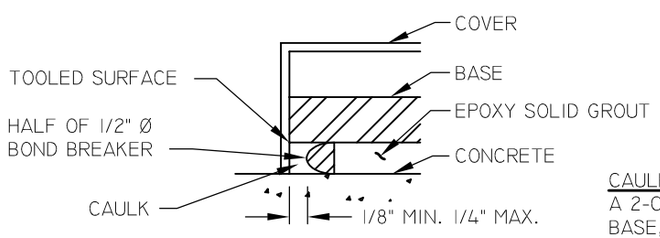

CAULK
A 2-COMPONENT, POLYURETHANE BASE, ELASTOMETRIC SEALANT IN A NON-SAG CONSISTENCY. (SIKAFLEX-2C NS. OR EQUAL)

2 FOOTING @ T.S. FRAME CONNECTION DETAIL

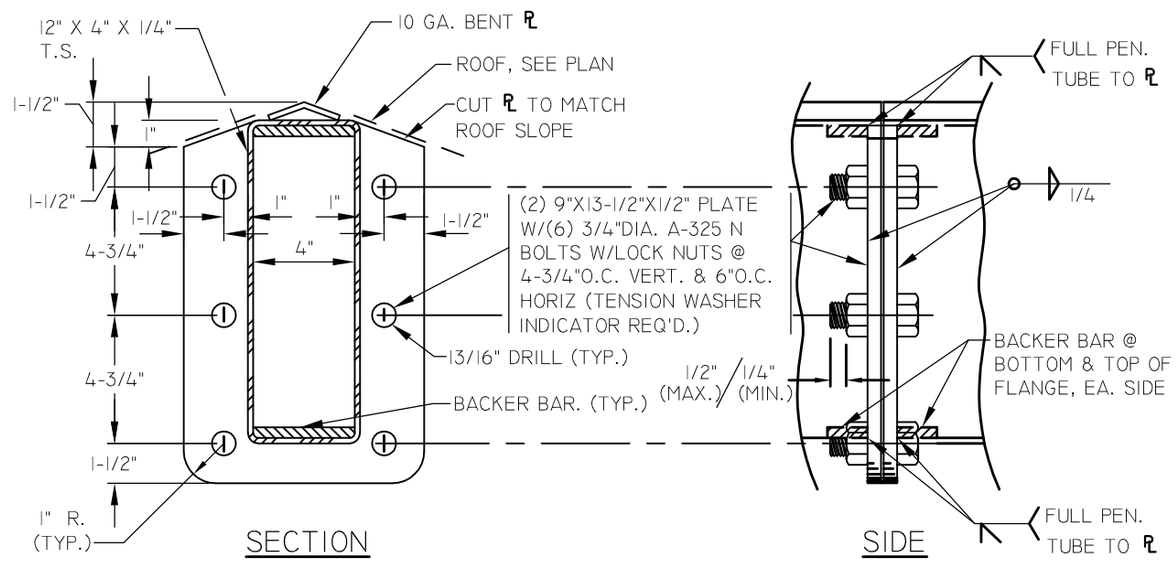

3 RIDGE BEAM SPLICE

mesa·az

STANDARD BUS SHELTER, STRUCTURAL DETAILS

DETAIL NO.
M-45.03.1

REV. 03/30/2015

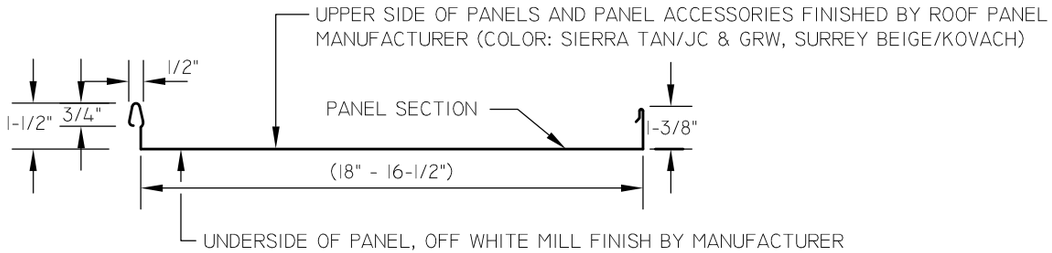

NOTE: CLIP TO BE PRIMED & SHOP PAINTED TO MATCH UNDERSIDE OF ROOF COLOR

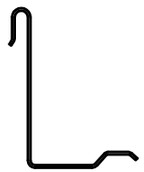

CONTINUOUS CONCEALED RIB CLIP SECTION

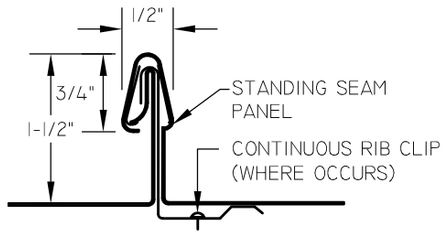

SEAM SECTION

"TEST FOR WIND UPLIFT RESISTANCE OF ROOF ASSEMBLIES" - CLASS UL90
FY = 50 KSI
ASTM 331-6

APPROVED ROOF PANEL MANUFACTURER:
J.C. & G.R.W. @ (602) 569-2235
KOVACH @ (480) 926-9292

STANDING SEAM ROOF PANEL

NTS

4 (BERRIDGE CEE-LOCK OR K-LOK STRUCT.)

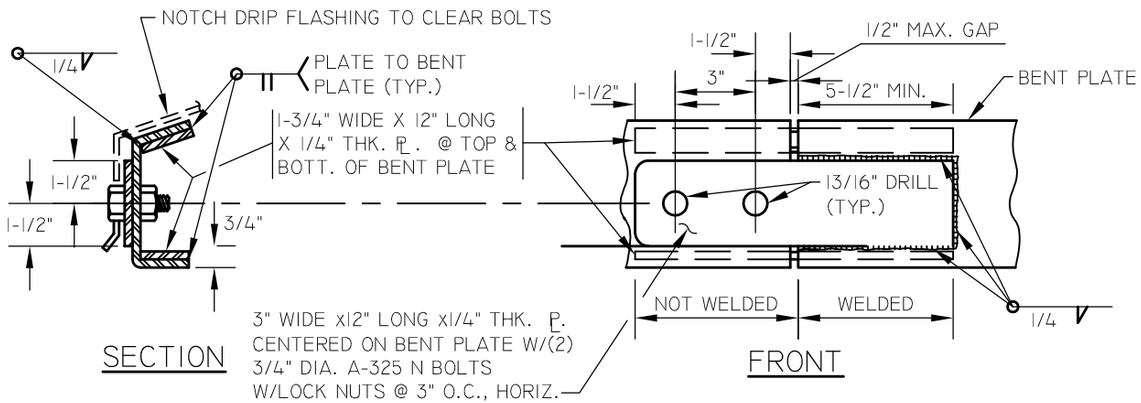

7 BENT PLATE SPLICE

NOTES

1. DRILL HOLE :
   SEE DETAIL 2, M-45.03.1 FOR ANCHOR TYPE, AND ANCHOR DIAMETER. DRILL HOLE IN EXISTING CONCRETE, 1/16" LARGER DIAMETER THAN THREADED RODS.

2. CLEAN HOLE :
   FOR DRY-DRILLED HOLE, VACUUM OR BLOW OUT HOLE USING OIL-FREE AND MOISTURE-FREE COMPRESSED AIR. FOR WET DRILLED HOLES, WASH OUT HOLE TO REMOVE DRILLING SLURRY RESIDUE, REMOVE FREE STANDING WATER AND ALLOW HOLE TO THOROUGHLY DRY.

3. EPOXY :
   HILTI HY C-150 ADHESIVE ANCHOR SYSTEM (I.C.B.O. REPORT NO. 5193). ANCHOR INSTALLATION PER MANUFACTURERS RECOMMENDATIONS. (REQUIRES ENGINEERING INSPECTOR'S OBSERVATION AND APPROVAL)

4. PREPARE ANCHOR :
   CLEAN, DRY AND WIPE ANCHOR FREE OF ALL WATER, DIRT, OIL AND GREASE, ETC.

5. SET ANCHOR :
   FILL HOLE WITH EPOXY, INSERT ANCHOR AND WORK UP AND DOWN AND TAP LIGHTLY TO INSURE COMPLETE EMBEDMENT.

6. SET OR CURE TIME :
   DO NOT DISPLACE OR MOVE ANCHOR IN ANY WAY AFTER ANCHOR IS SET. ALLOW EPOXY TO CURE FOR 24 HOURS MINIMUM BEFORE TIGHTENING NUTS ON ANCHOR.

6 TYP. EPOXY GROUTING PROCEDURE

mesa·az

STANDARD BUS SHELTER - STRUCTURAL DETAILS

DETAIL NO.
M-45.03.2

REV. 02/23/2015

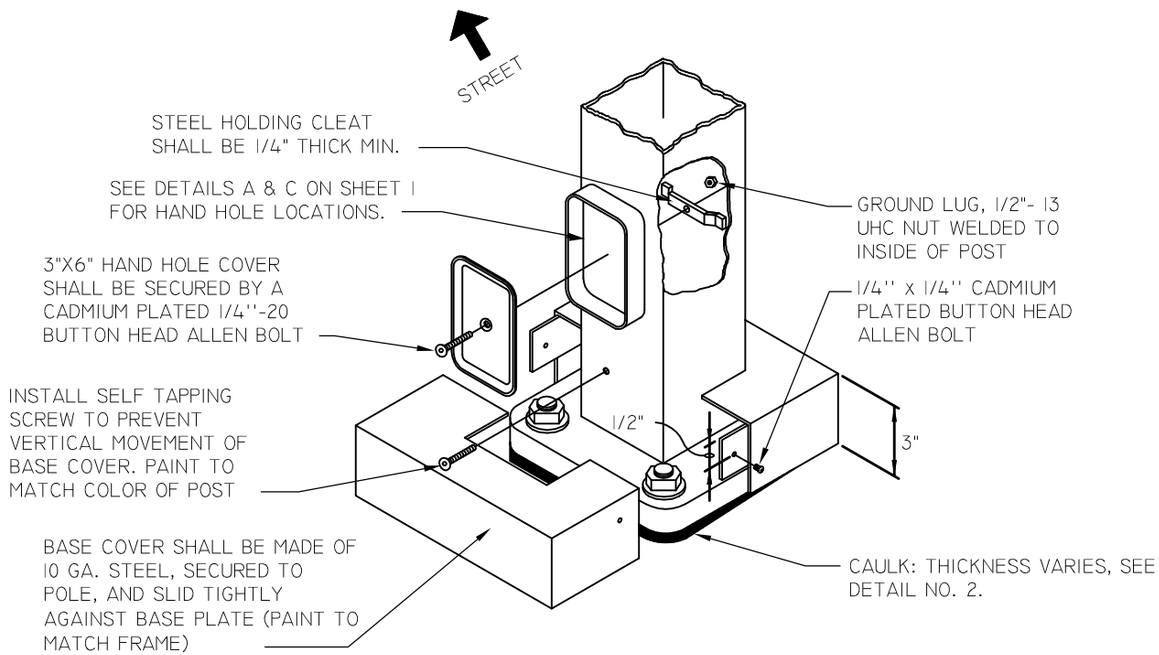

5 STANDARD HAND HOLE ASSEMBLY AND BASE COVER

NOTES:

1. HAND HOLE COVER SHALL BE SECURED BY A CADMIUM PLATED 1/2"-20 BUTTON HEAD ALLEN BOLT AND HOLDING CLEAT.
2. THE POST'S GROUND SHALL BE 1/2"-13 UHC NUT WELDED TO INSIDE OF THE POST AS SHOWN.
3. HAND HOLE SHALL BE ORIENTED SO THAT IT FACES 90 DEGREES AWAY FROM THE STREET.
4. HAND HOLE DIMENSIONS SHALL BE 3" BY 6".
5. HAND HOLE COVER DIMENSIONS SHALL BE 3" BY 6".
6. SLOT LENGTH OF BASE PLATE EQUALS ANCHOR BOLT DIA. PLUS 1/2" ON BOTH SIDES OF ANCHOR BOLT.

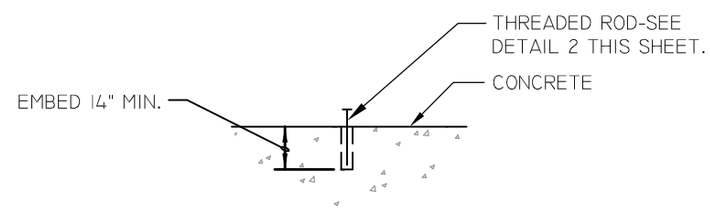

HORIZONTAL SURFACE

NOT TO SCALE

mesa·az

STANDARD BUS SHELTER - STRUCTURAL DETAILS

DETAIL NO.
M-45.03.3

REV. 02/23/2015

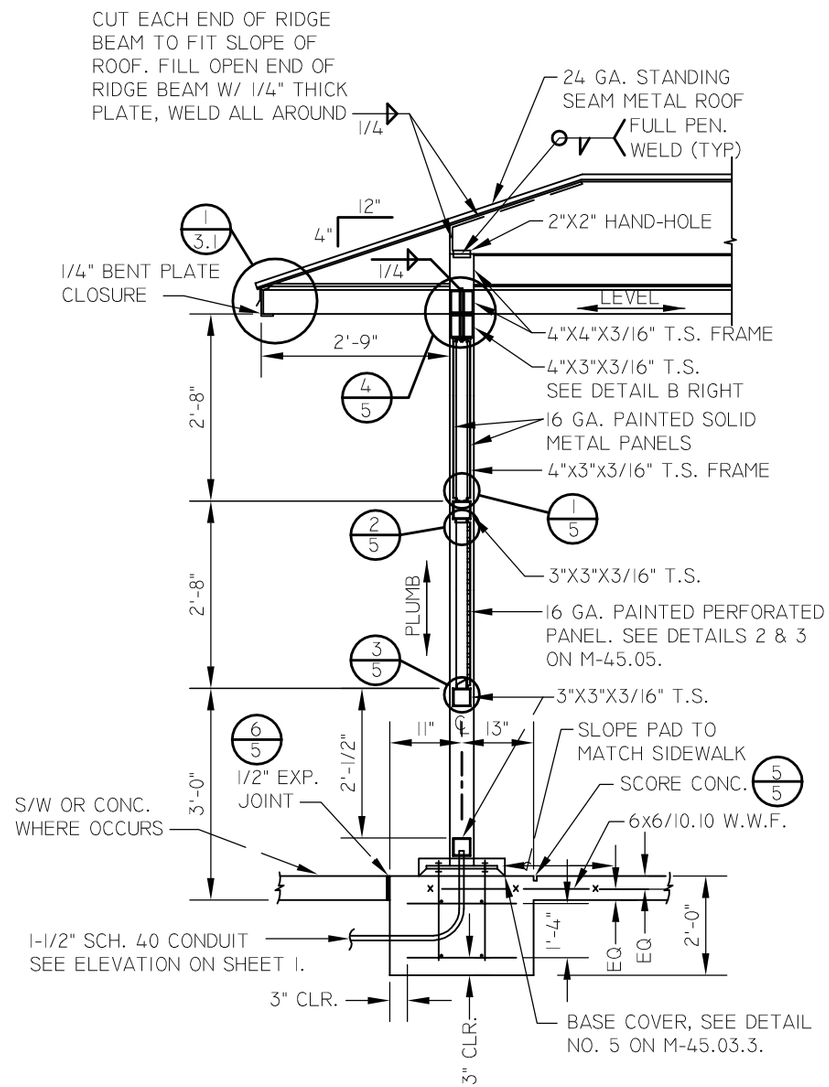

NOTE:
SEE DETAIL 2 (FOOTING @ T.S. FRAME CONNECTION) ON M-45.03.1 FOR ADDITIONAL INFORMATION.

A - ROOF SECTION & FRAME SECTION (PARTIAL)

NOT TO SCALE

mesa·az

STANDARD BUS SHELTER - ROOF & FRAME SECTIONS

DETAIL NO.
M-45.04.1

REV. 02/23/2015

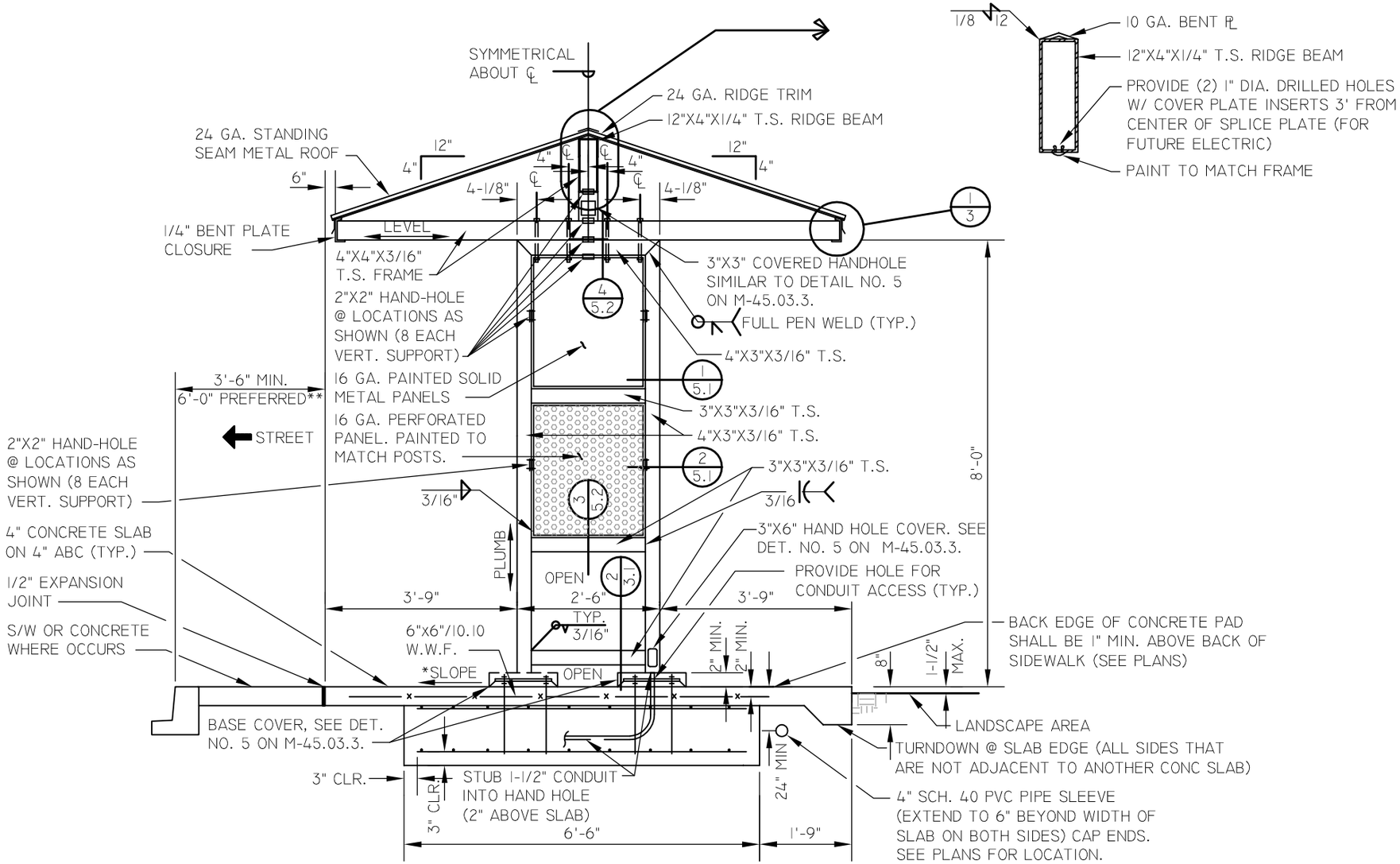

* SLOPE NOT TO EXCEED 2% IN ANY DIRECTION

** SEE NOTE ON FLOOR PLAN ON DET. M-45.02.1 ABOUT 8' MIN. REQUIRED FOR ADA CLEARANCE.

SEE DRAWING NO. A-68000 & A-68000A FOR STRUCTURAL CALCULATIONS

B - ROOF & FRAME SECTION

NOT TO SCALE

mesa·az

STANDARD BUS SHELTER - ROOF & FRAME SECTIONS

DETAIL NO. M-45.04.2

REV. 03/30/2015

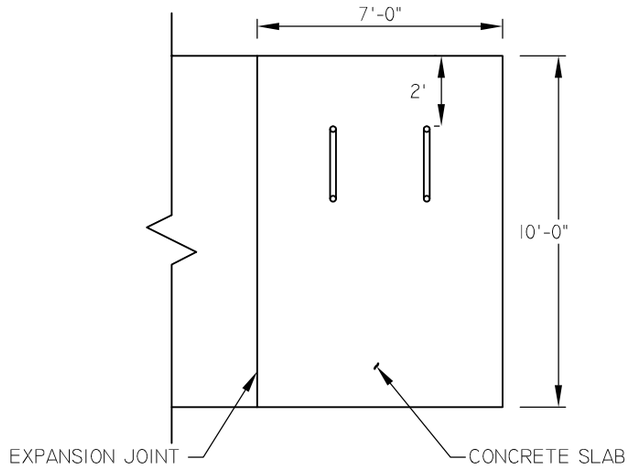

PLAN VIEW

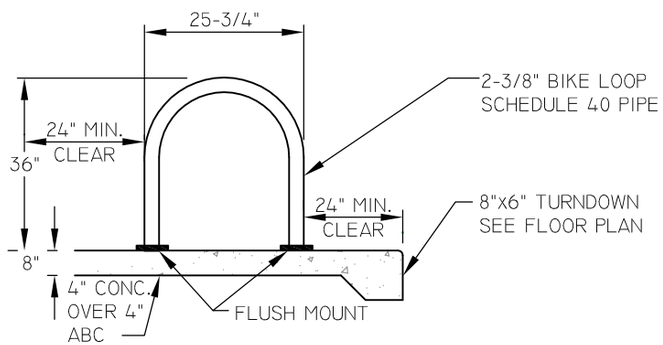

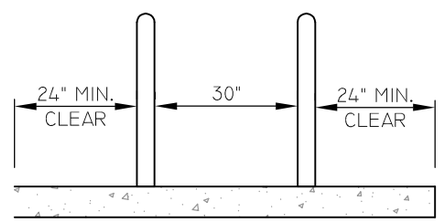

PATTERSON-WILLIAMS RAINBOW RACK. MODEL NO. 1609-01M3 POWDER COATED OR APPROVED EQUAL. COLOR: GREEN (RAL 6007). PAINTED TO MATCH BENCH BY MANUFACTURER. 2 LOOPS REQUIRED, SEE FLOOR PLAN. FASTEN TO CONCRETE WITH 3/8" DIAMETER 4" LONG PRIMA HIGH EXPANSION ANCHORS BY RED HEAD, 3/8" DIAMETER 3-3/4" LONG KWIK BOLT, TZ EXPANSION ANCHOR BY HILTI, OR ENGINEER'S APPROVED EQUAL.

8 BIKE LOOP DETAIL

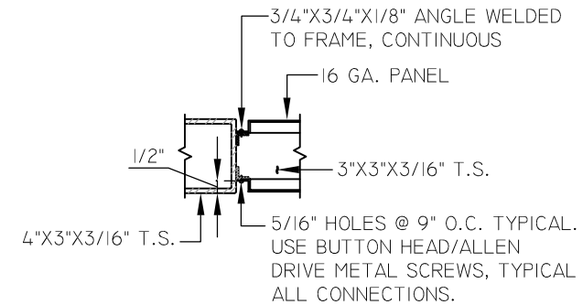

1 SOLID PANEL TO FRAME CONNECTION (TYP.)

NTS

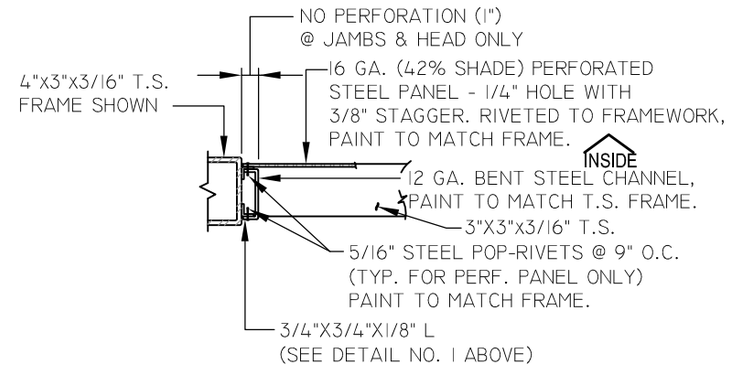

2 PERFORATED SCREEN FRAME (JAMB)

NTS

SEE DRAWING NO. A-68000
FOR STRUCTURAL CALCULATIONS

SBS-12/97
MASTER PLAN REGISTRATION

NOT TO SCALE

mesa·az

STANDARD BUS SHELTER - MISCELLANEOUS DETAILS

DETAIL NO.
M-45.05.1

REV. 03/30/2015

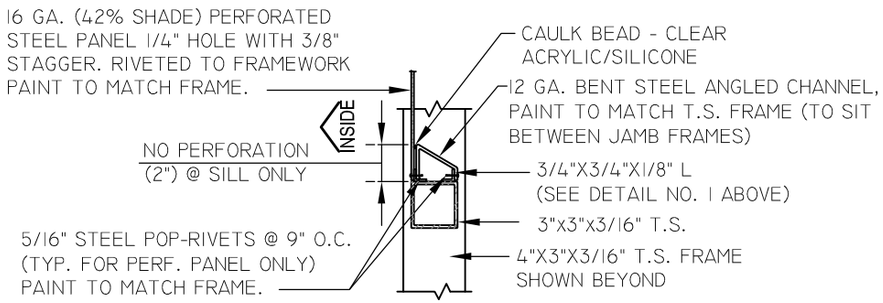

3 PERFORATED SCREEN FRAME (SILL)

NTS

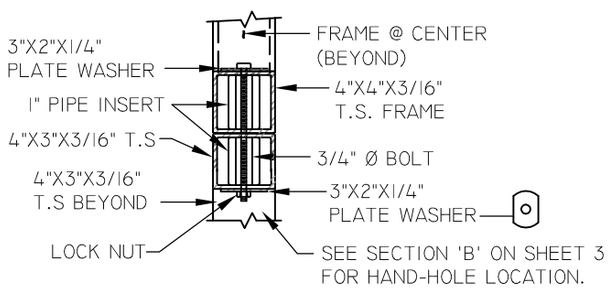

4 CONNECTION @ ROOF STRUCTURE

NTS

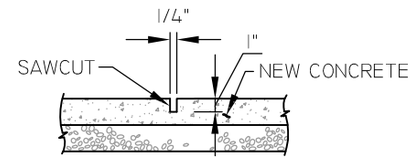

5 CONCRETE SCORE

NTS

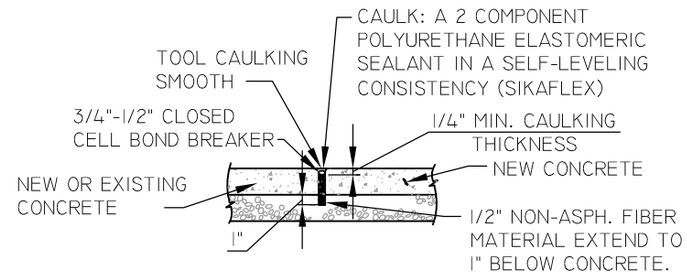

6 EXPANSION JOINT

NTS

SEE DRAWING NO. A-68000
FOR STRUCTURAL CALCULATIONS

SBS-12/97

MASTER PLAN REGISTRATION

NOT TO SCALE

mesa·az

STANDARD BUS SHELTER - MISCELLANEOUS DETAILS

DETAIL NO.
M-45.05.2

REV. 02/23/2015

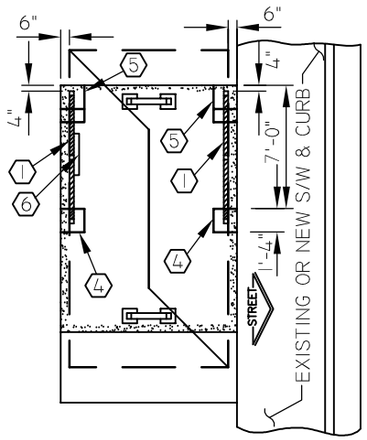

1 SOUTHBOUND

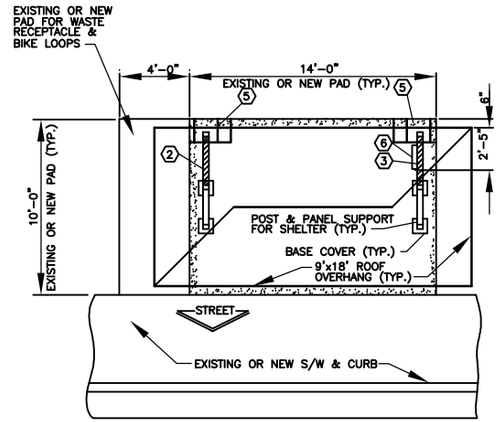

3 WESTBOUND

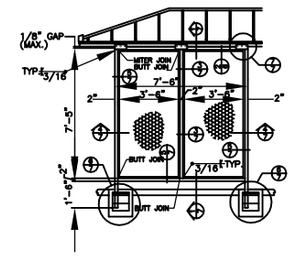

5 SUN SCREEN ELEV.

KEY NOTES:

1. SUN SCREEN (SEE DETAIL NO. 5 THIS SHEET)
2. END SCREEN (SEE DETAIL NO. 6 THIS SHEET
3. END SCREEN (SEE DETAIL NO. 6 THIS SHEET
4. 1'-4" x 1'-4" x 1'-8" DEEP FOUNDATION (SEE DE M-45.07).
5. 1'-4" x 1'-4" x 1'-8" DEEP FOUNDATION W/MODI DETAIL NO. 11 ON M-45.07).
6. PROVIDE AND ATTACH SCHEDULE HOLDER, RC INFORMATION PRODUCTS OR APPROVED EQUA LOCATION AS SPECIFIED BY CITY INSPECTOR.

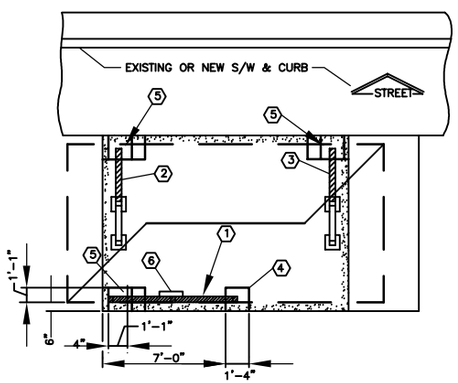

2 EASTBOUND

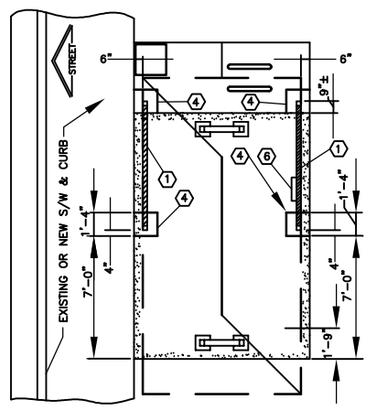

4 NORTHBOUND

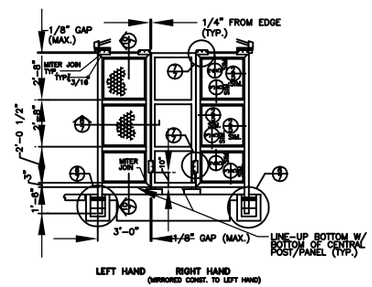

6 SUN SCREEN ELEV.

NOT TO SCALE

mesa·az

STANDARD BUS SHELTER - SUN SCREEN DETAILS

DETAIL NO.
M-45.06

REV. 01/31/2014

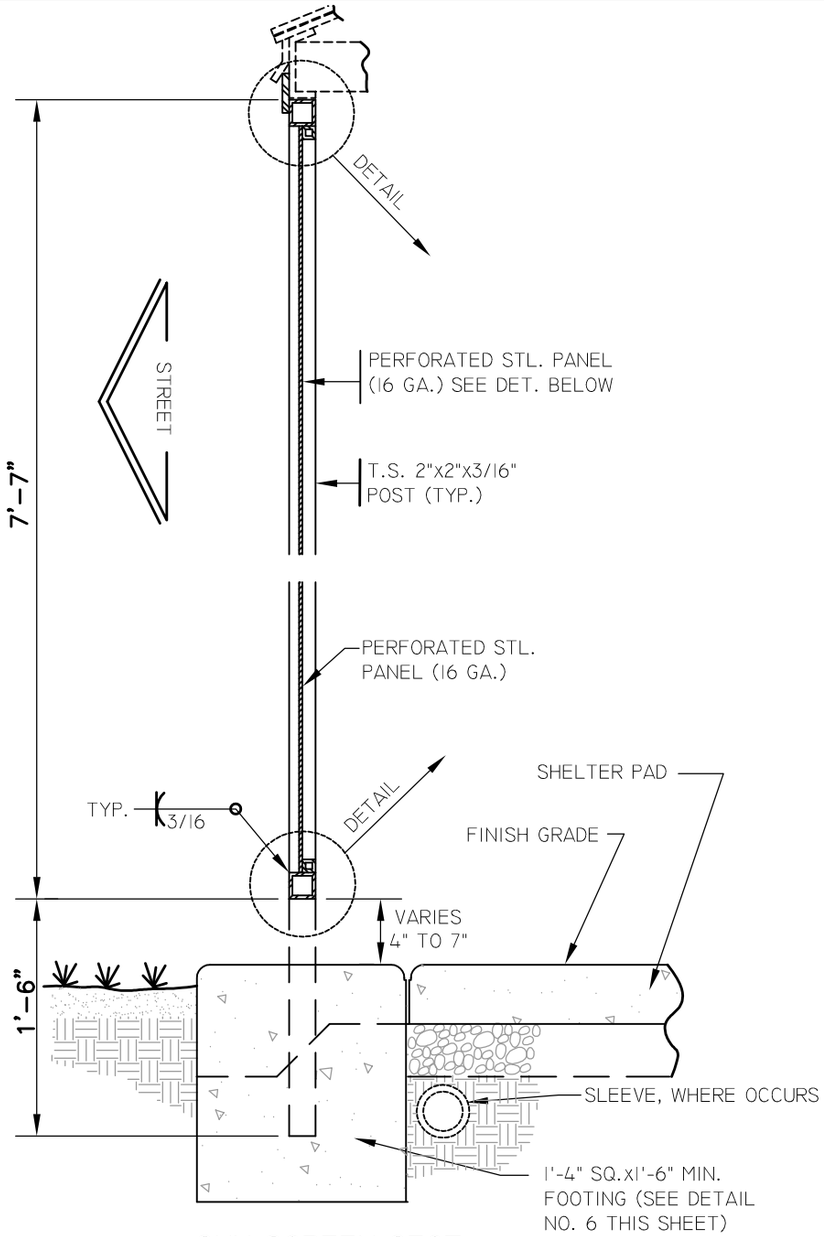

1 SUN SCREEN SECT.

NOTE:
*POSITION OF POST IN FOOTER IS DETERMINED BY FRAME ORIENTATION (SIDE TO SIDE, REQUIRES 6" MIN. CLEARANCE) (FRONT TO BACK, REQUIRES 4" MIN. CLEARANCE) THIS IS TYPICAL TO DET. NO. 6 & DET. NO. 11 RIGHT.

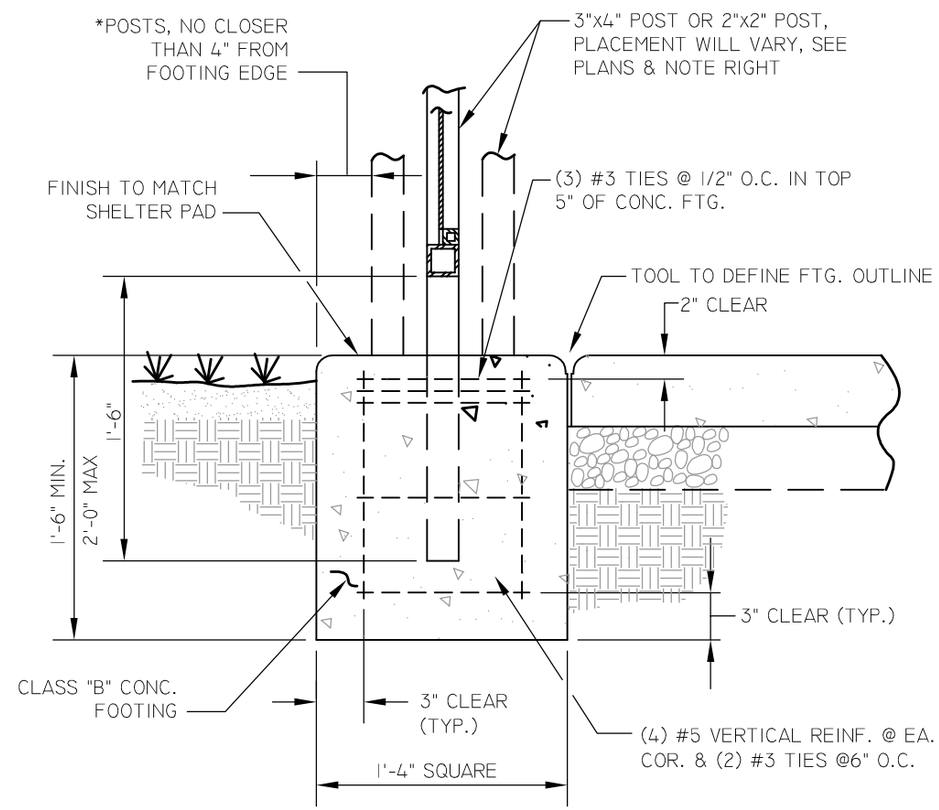

6 TYPICAL FOOTING

NOT TO SCALE

mesa·az

STANDARD BUS SHELTER - SUN SCREEN DETAILS

DETAIL NO.
M-45.07.1

REV. 02/23/2015

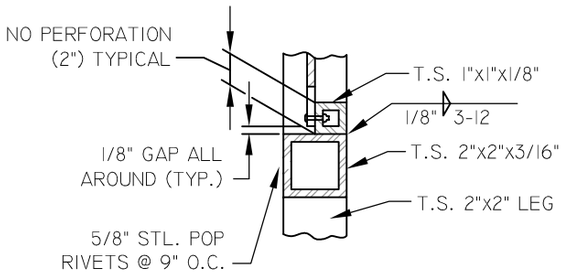

5 DETAIL

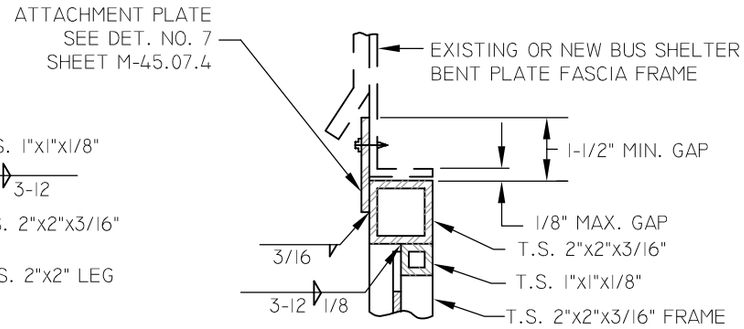

2 DETAIL

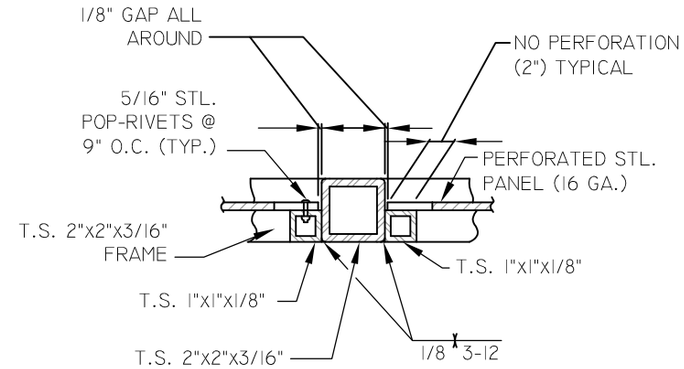

3 DETAIL

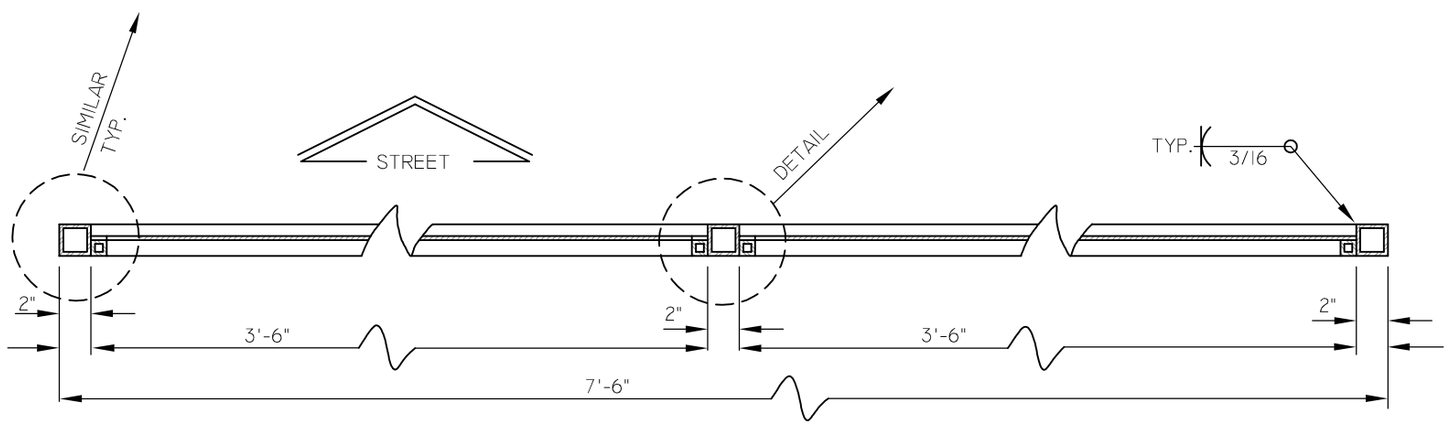

4 SUN SCREEN SECT.

NOT TO SCALE

mesa·az

STANDARD BUS SHELTER - SUN SCREEN DETAILS

DETAIL NO.
M-45.07.2

REV. 03/30/2015

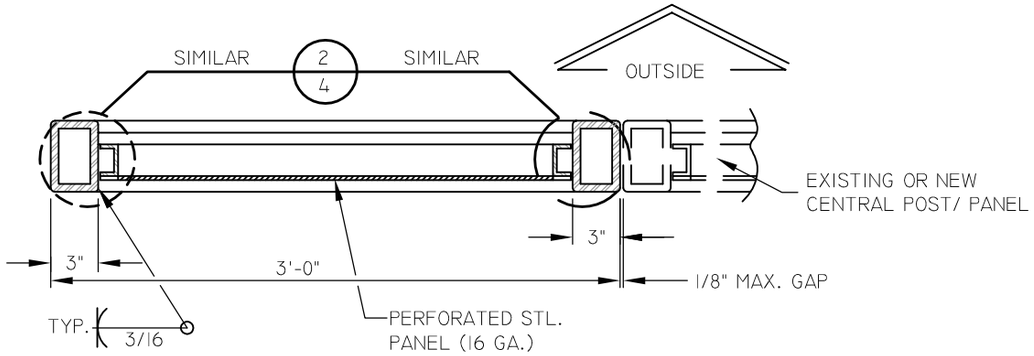

8 END SCREEN SECT.

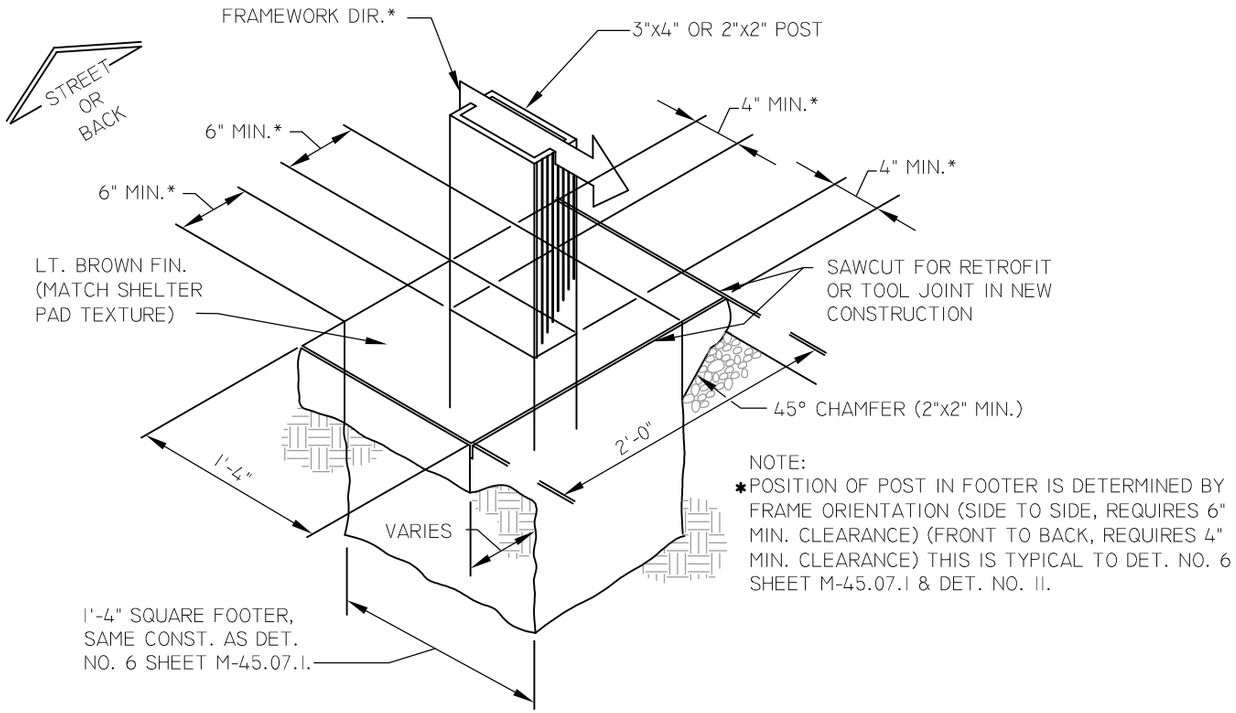

NOTE:
*POSITION OF POST IN FOOTER IS DETERMINED BY FRAME ORIENTATION (SIDE TO SIDE, REQUIRES 6" MIN. CLEARANCE) (FRONT TO BACK, REQUIRES 4" MIN. CLEARANCE) THIS IS TYPICAL TO DET. NO. 6 SHEET M-45.07.1 & DET. NO. 11.

11 "T" TOP FOOTING

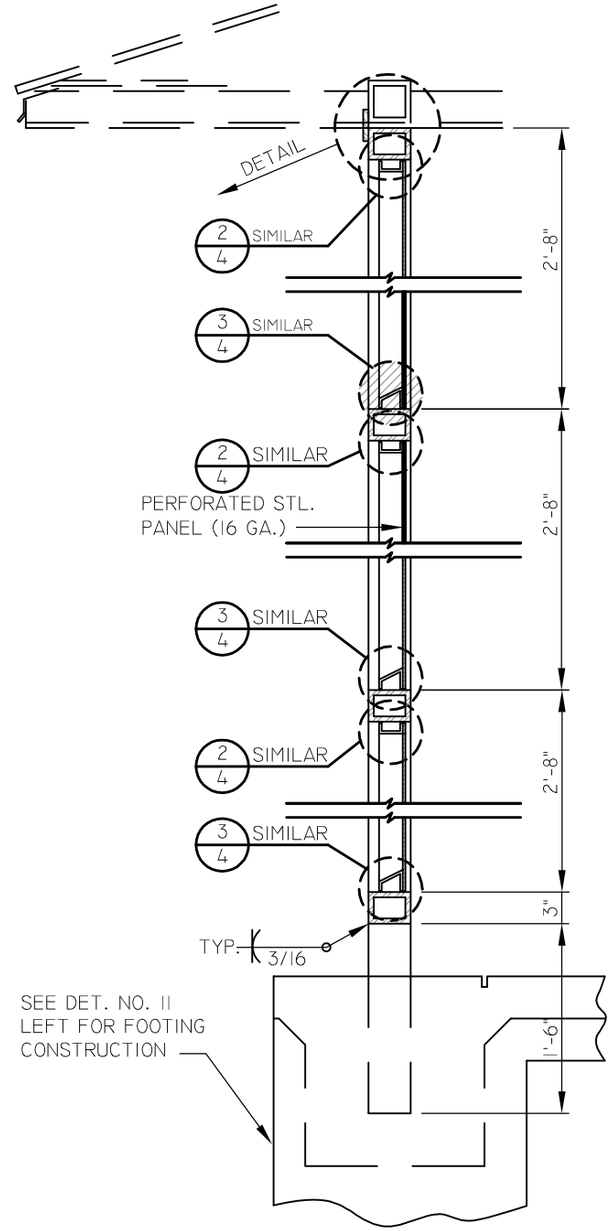

10 END SCREEN SECT.

NOT TO SCALE

mesa·az

STANDARD BUS SHELTER - SUN SCREEN DETAILS

DETAIL NO.
M-45.07.3

REV. 03/30/2015

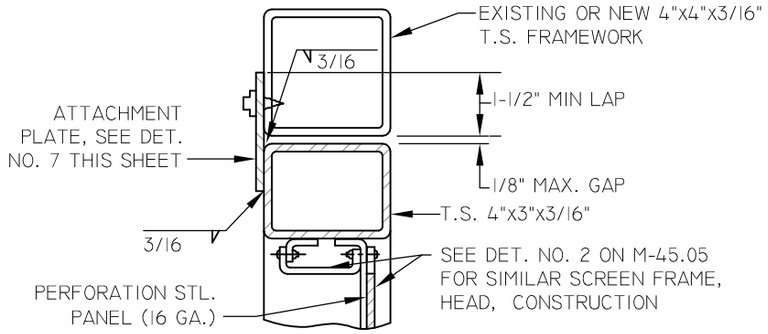

9 DETAIL

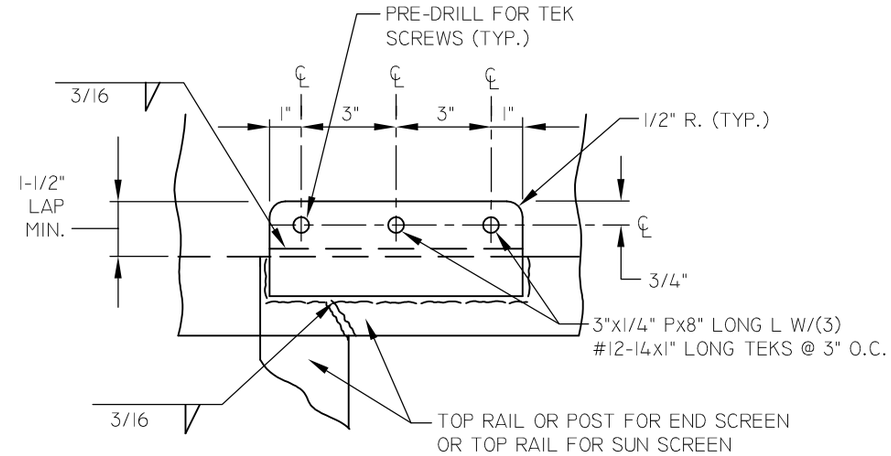

7 ATTACHMENT PLATE

NOT TO SCALE

mesa·az

STANDARD BUS SHELTER - SUN SCREEN DETAILS

DETAIL NO.
M-45.07.4

REV. 03/30/2015

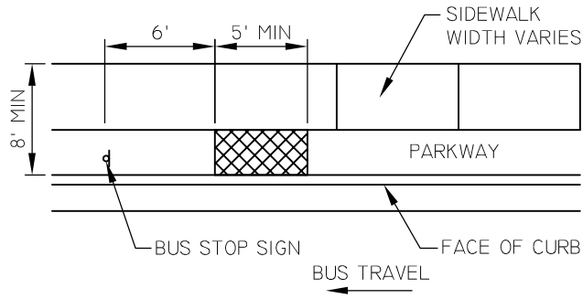

MINIMUM BOARDING AREA DETACHED SIDEWALK

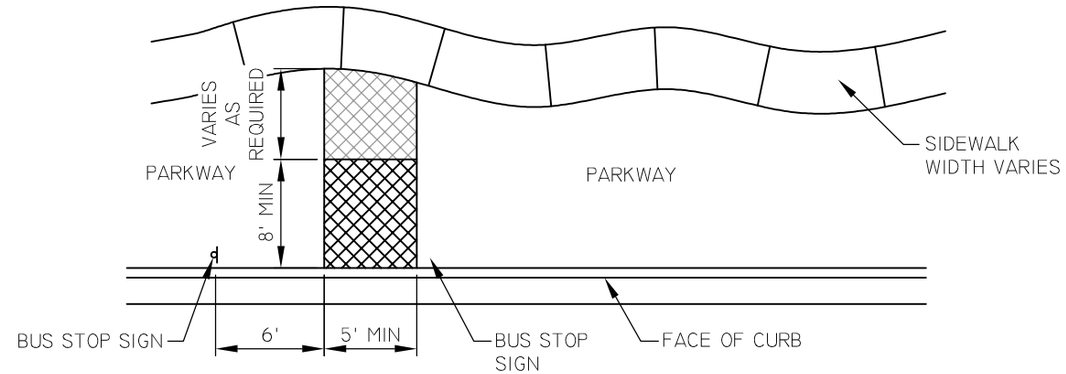

MINIMUM BOARDING AREA MEANDERING SIDEWALK OR NO SIDEWALK

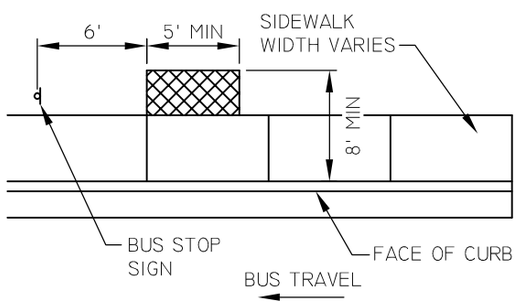

MINIMUM BOARDING AREA

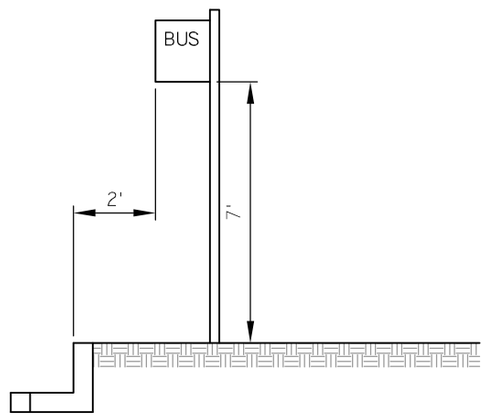

STANDARD SIGN INSTALLATION

BEHIND CURB AND GUTTER

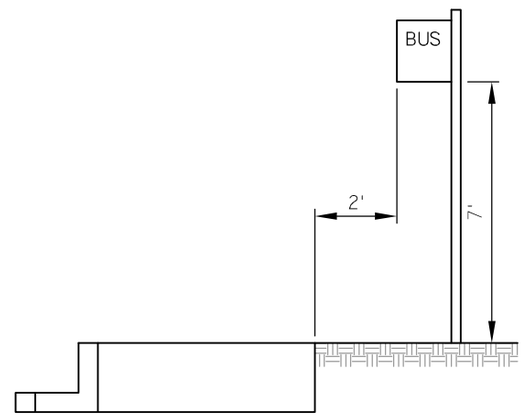

STANDARD SIGN INSTALLATION

BEHIND SIDEWALK

ADDITIONAL WIDENING
(AS NEEDED) PER MAG 230

NOT TO SCALE

mesa·az

BUS STOP PAD DETAIL

DETAIL NO.
M-45.08

REV. 02/23/2015

NOTES

1. ALL DIMENSIONS AT CURB LINE ARE TO FACE OF CURB (F/C) UNLESS OTHERWISE NOTED.
2. IF NO RIGHT TURN LANE, CONTINUE 6' BIKE LANE TO APPROACH.
3. DEVELOPER SHALL CONFIRM WITH THE CITY IF BUS PULLOUTS ARE REQUIRED AT EACH INTERSECTION.
4. CONTINUATION OF TAPERS SHOWN ON FIGURE COM DETAIL M-46.02.

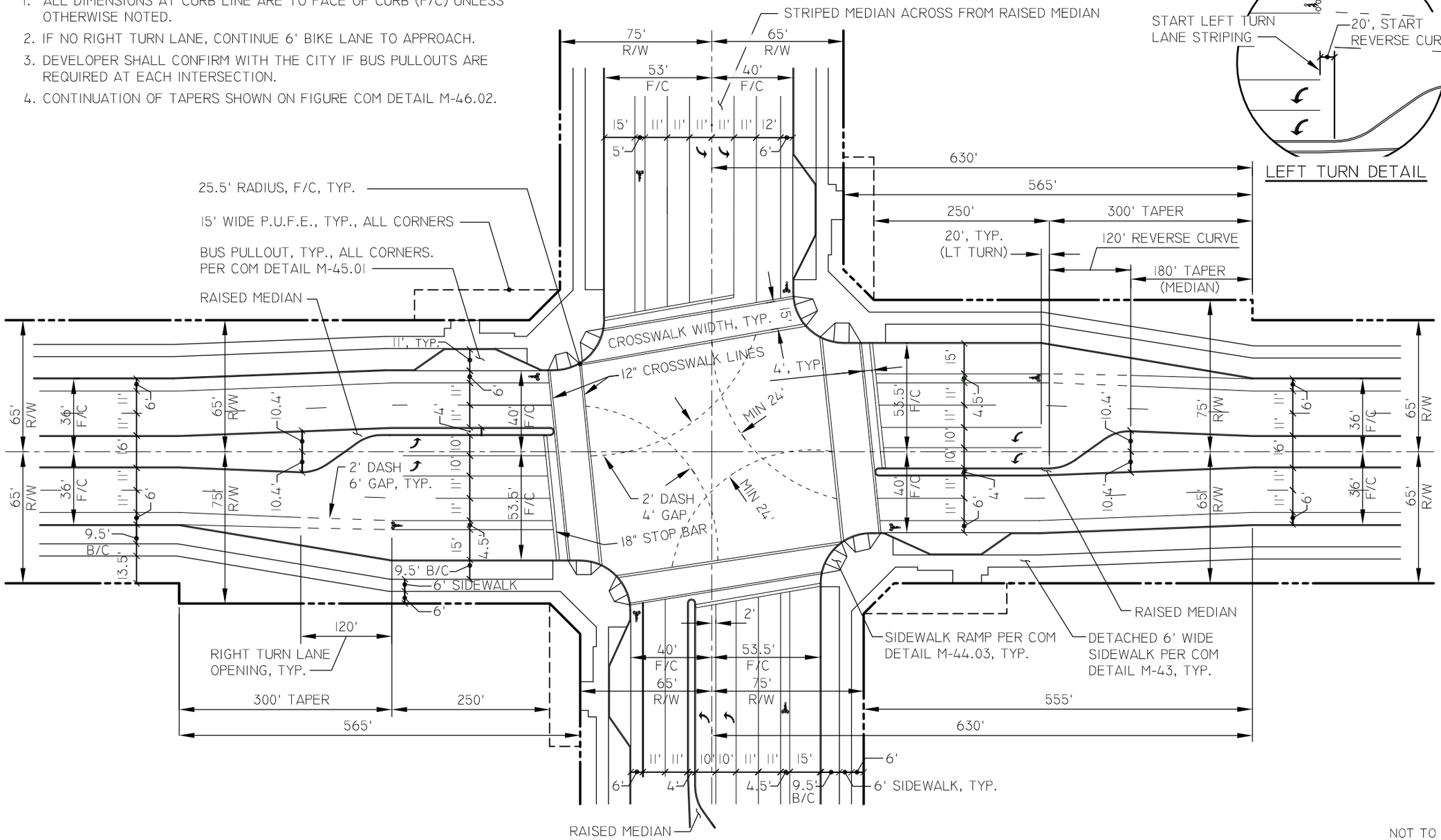

NOT TO SCALE

mesa·az

ARTERIAL STREET INTERSECTION (4 LANES) WITH 4' RAISED MEDIANS

DETAIL NO. M-46.01.1

REV. 01/31/2014

NOTES

1. ALL DIMENSIONS AT CURB LINE ARE TO FACE OF CURB (F/C) UNLESS OTHERWISE NOTED.
2. IF NO RIGHT TURN LANE, CONTINUE 6' BIKE LANE TO APPROACH.
3. DEVELOPER SHALL CONFIRM WITH THE CITY IF BUS PULLOUTS ARE REQUIRED AT EACH INTERSECTION.
4. FOR INTERSECTION LEGS WITH PEDESTRIAN REFUGE MEDIAN CROSSINGS, CROSSWALK SHALL BE PERPENDICULAR TO MEDIAN.
5. CONTINUATION OF TAPERS SHOWN ON COM DETAIL M-46.04

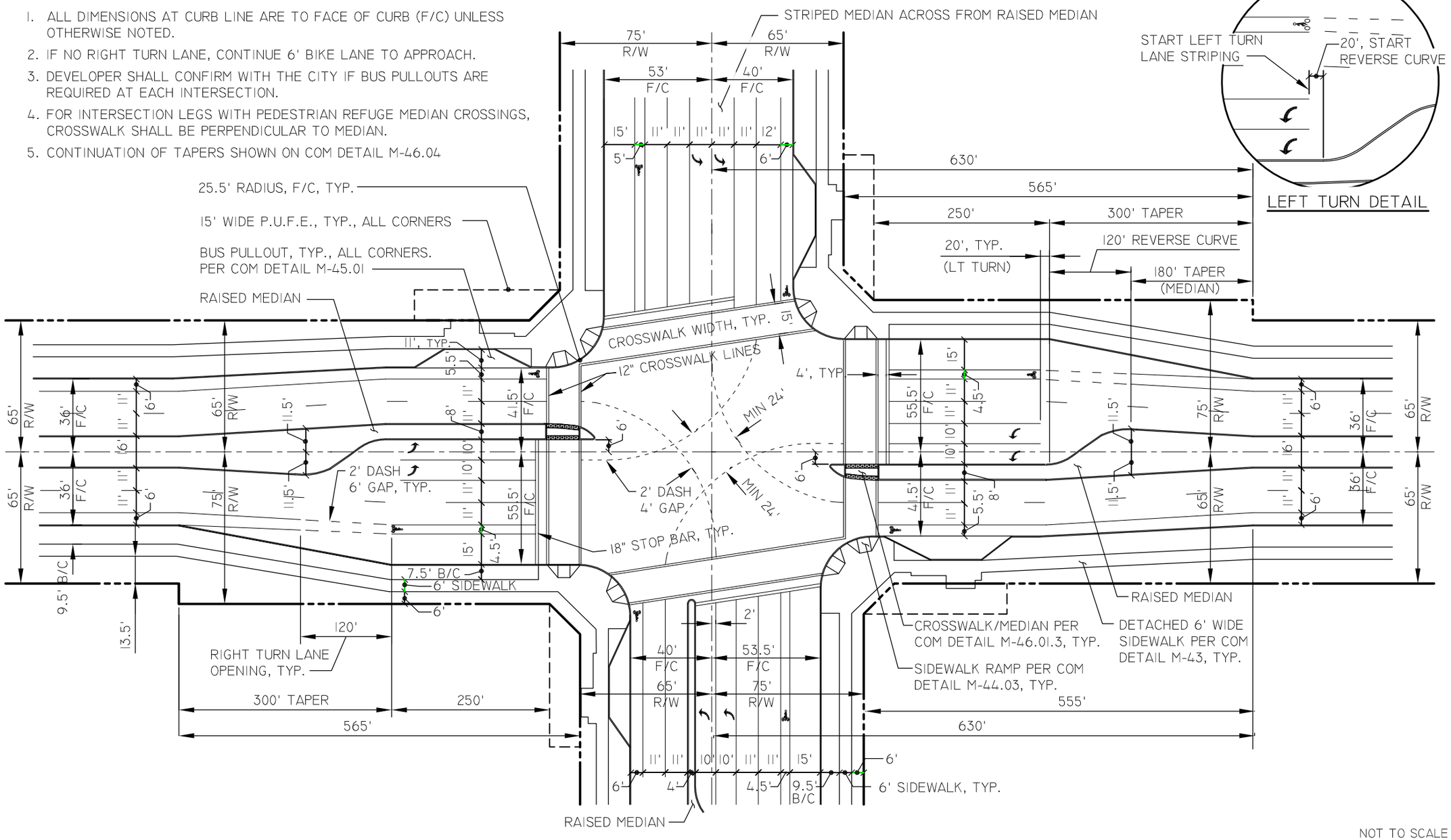

NOT TO SCALE

mesa·az

ARTERIAL STREET INTERSECTION (4 LANES) WITH 8' RAISED MEDIANS

DETAIL NO. M-46.01.2

REV. 01/31/2014

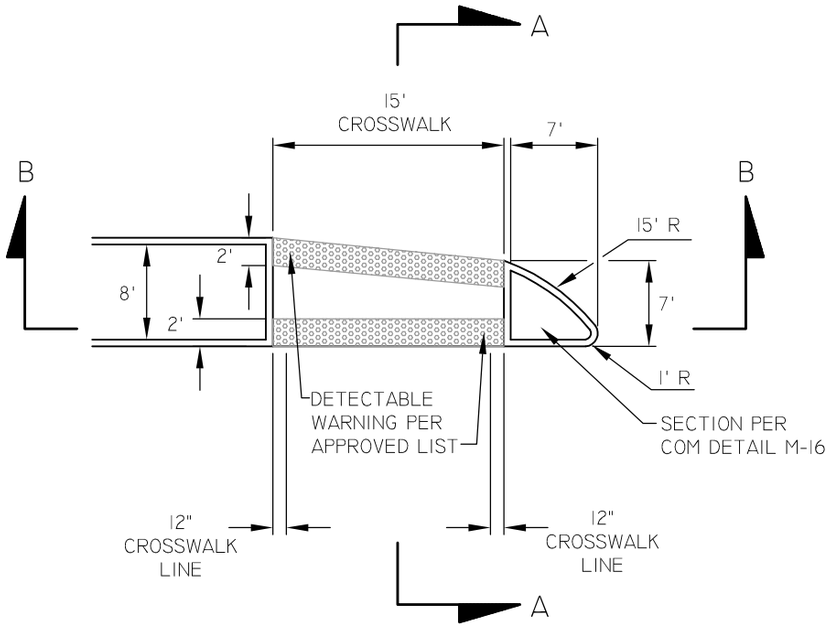

CROSSWALK/MEDIAN DETAIL

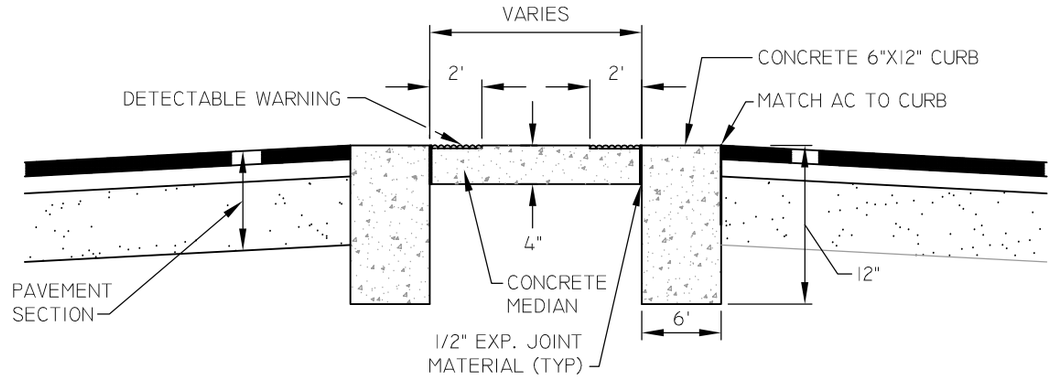

SECTION A-A

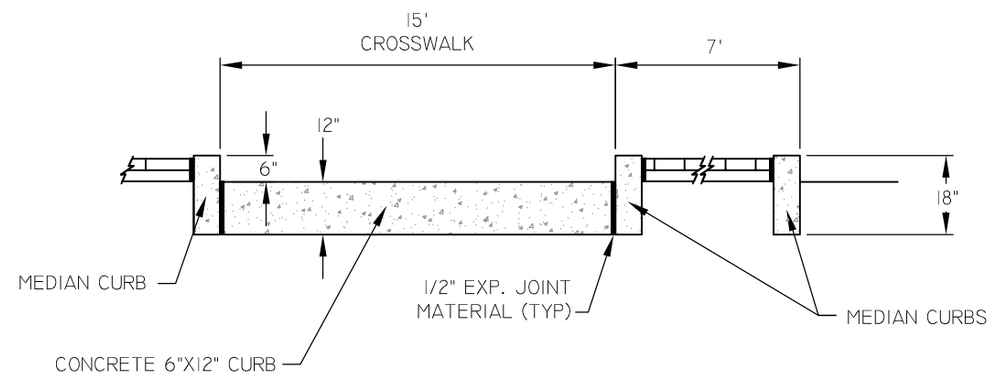

SECTION B-B

NOT TO SCALE

mesa·az

ARTERIAL STREET INTERSECTION (4 LANES) -
RAISED MEDIAN / CROSSWALK DETAIL

DETAIL NO.
M-46.01.3

REV. 01/31/2014

NOTES

1. ALL DIMENSIONS AT CURB LINE ARE TO FACE OF CURB (F/C) UNLESS OTHERWISE NOTED.
2. IF NO RIGHT TURN LANE, CONTINUE 6' BIKE LANE TO APPROACH.
3. DEVELOPER SHALL CONFIRM WITH THE CITY IF BUS BAYS ARE REQUIRED AT EACH INTERSECTION.
4. CONTINUATION OF TAPERS SHOWN ON COM DETAIL M-46.02.

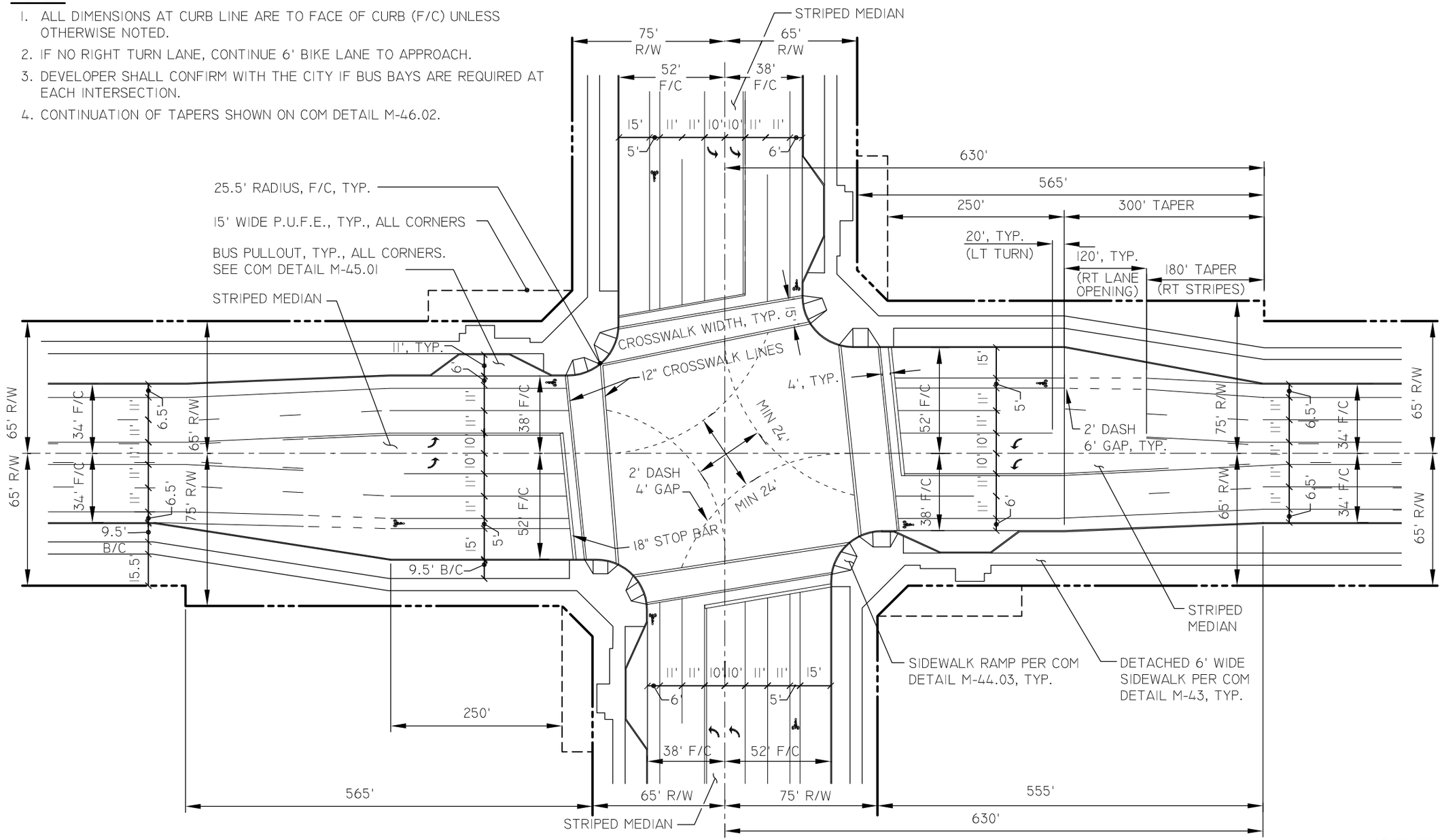

NOT TO SCALE

mesa·az

ARTERIAL STREET INTERSECTION (4 LANES) WITH STRIPED MEDIANS

DETAIL NO. M-46.02

REV. 01/31/2014

NOTES

1. ALL DIMENSIONS AT CURB LINE ARE TO FACE OF CURB (F/C) UNLESS OTHERWISE NOTED.
2. IF NO RIGHT TURN LANE, CONTINUE 6' BIKE LANE TO APPROACH.
3. DEVELOPER SHALL CONFIRM WITH THE CITY IF BUS PULLOUTS ARE REQUIRED AT EACH INTERSECTION.
4. TAPER DIMENSIONS NOT SHOWN IN LOWER LEFT CORNER FOR CLARITY. REFER TO TYPICAL DIMENSIONS SHOWN IN UPPER RIGHT CORNER.
5. CONTINUATION OF TAPERS SHOWN ON COM DETAIL M-46.04

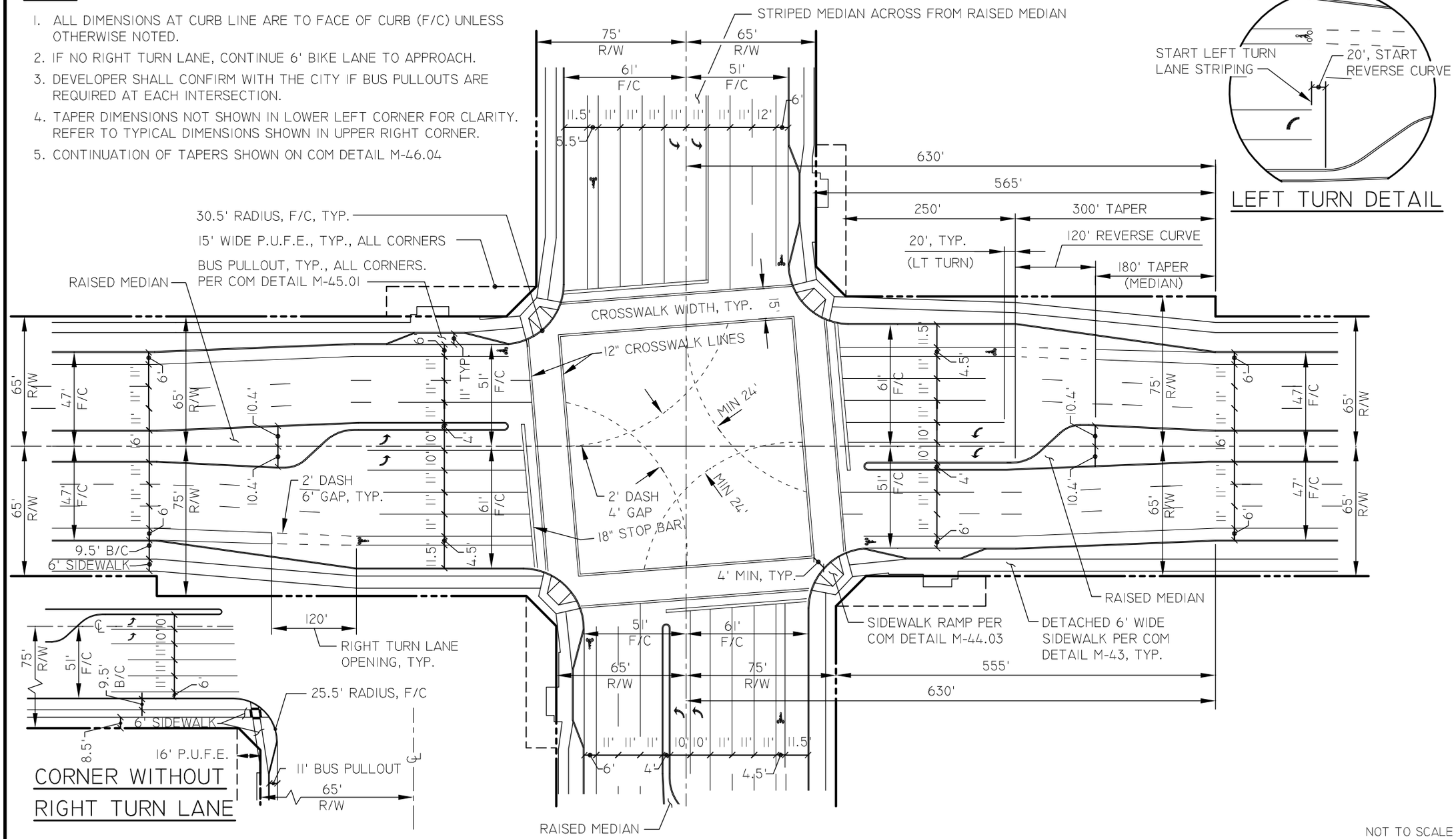

mesa·az

ARTERIAL STREET INTERSECTION (6 LANES) WITH 4' RAISED MEDIANS

DETAIL NO. M-46.03.1

REV. 01/31/2014

NOTES

1. ALL DIMENSIONS AT CURB LINE ARE TO FACE OF CURB (F/C) UNLESS OTHERWISE NOTED.
2. IF NO RIGHT TURN LANE, CONTINUE 6' BIKE LANE TO APPROACH.
3. DEVELOPER SHALL CONFIRM WITH THE CITY IF BUS PULLOUTS ARE REQUIRED AT EACH INTERSECTION.
4. FOR INTERSECTION LEGS WITH PEDESTRIAN REFUGE MEDIAN CROSSINGS, CROSSWALK SHALL BE PERPENDICULAR TO MEDIAN.
5. TAPER DIMENSIONS NOT SHOWN IN LOWER LEFT CORNER FOR CLARITY. REFER TO TYPICAL DIMENSIONS SHOWN IN UPPER RIGHT CORNER.
6. CONTINUATION OF TAPERS SHOWN ON COM DETAIL M-46.04

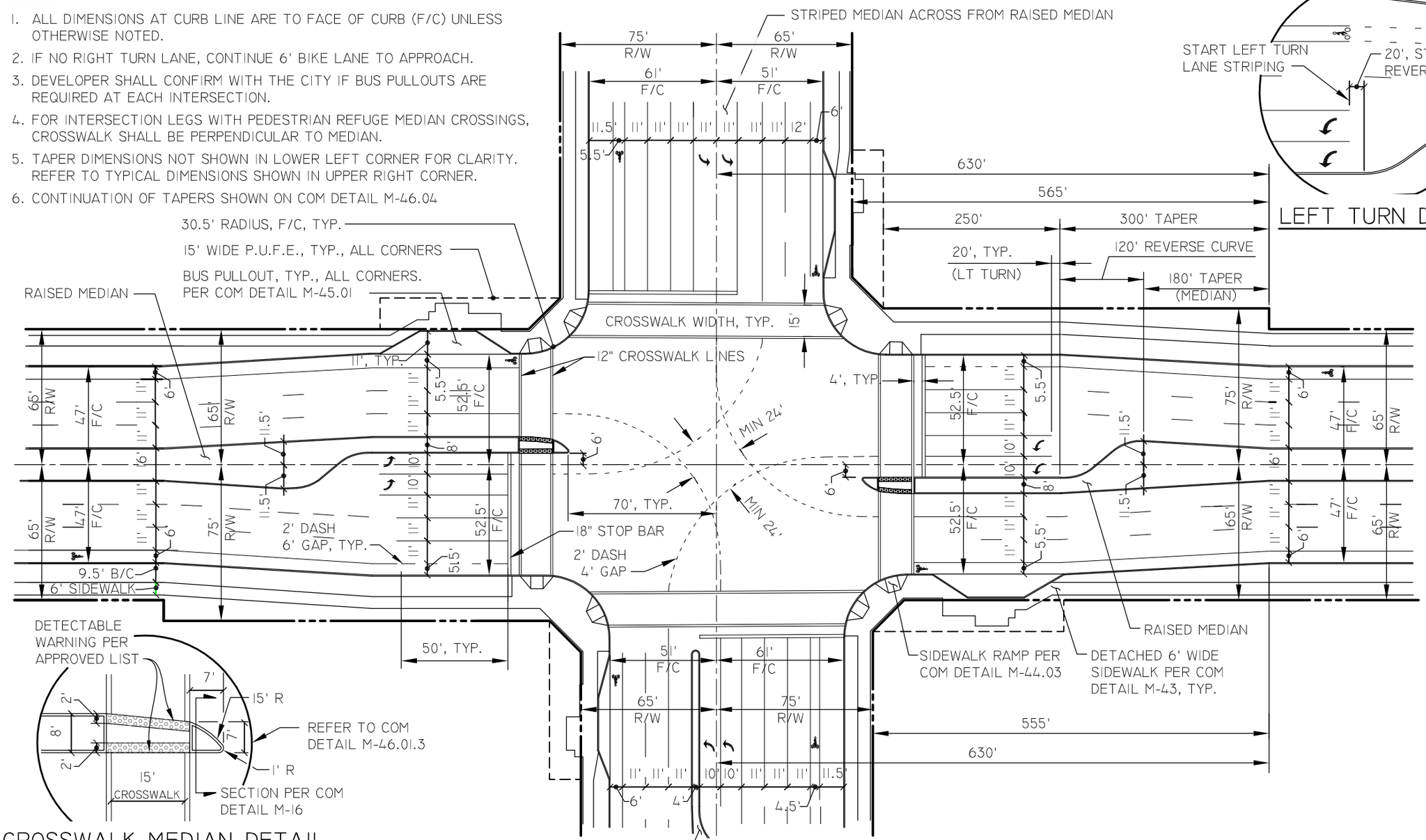

NOT TO SCALE

ARTERIAL STREET INTERSECTION (6 LANES) WITH 8' RAISED MEDIANS

DETAIL NO. M-46.03.2

REV. 01/31/2014

NOTES

1. ALL DIMENSIONS AT CURB LINE ARE TO FACE OF CURB (F/C) UNLESS OTHERWISE NOTED.
2. IF NO RIGHT TURN LANE, CONTINUE 6' BIKE LANE TO APPROACH.
3. DEVELOPER SHALL CONFIRM WITH THE CITY IF BUS PULLOUTS ARE REQUIRED AT EACH INTERSECTION.
4. TAPER DIMENSIONS NOT SHOWN IN LOWER LEFT CORNER FOR CLARITY. REFER TO TYPICAL DIMENSIONS SHOWN IN UPPER RIGHT CORNER.
5. CONTINUATION OF TAPERS SHOWN ON COM DETAIL M-46.04

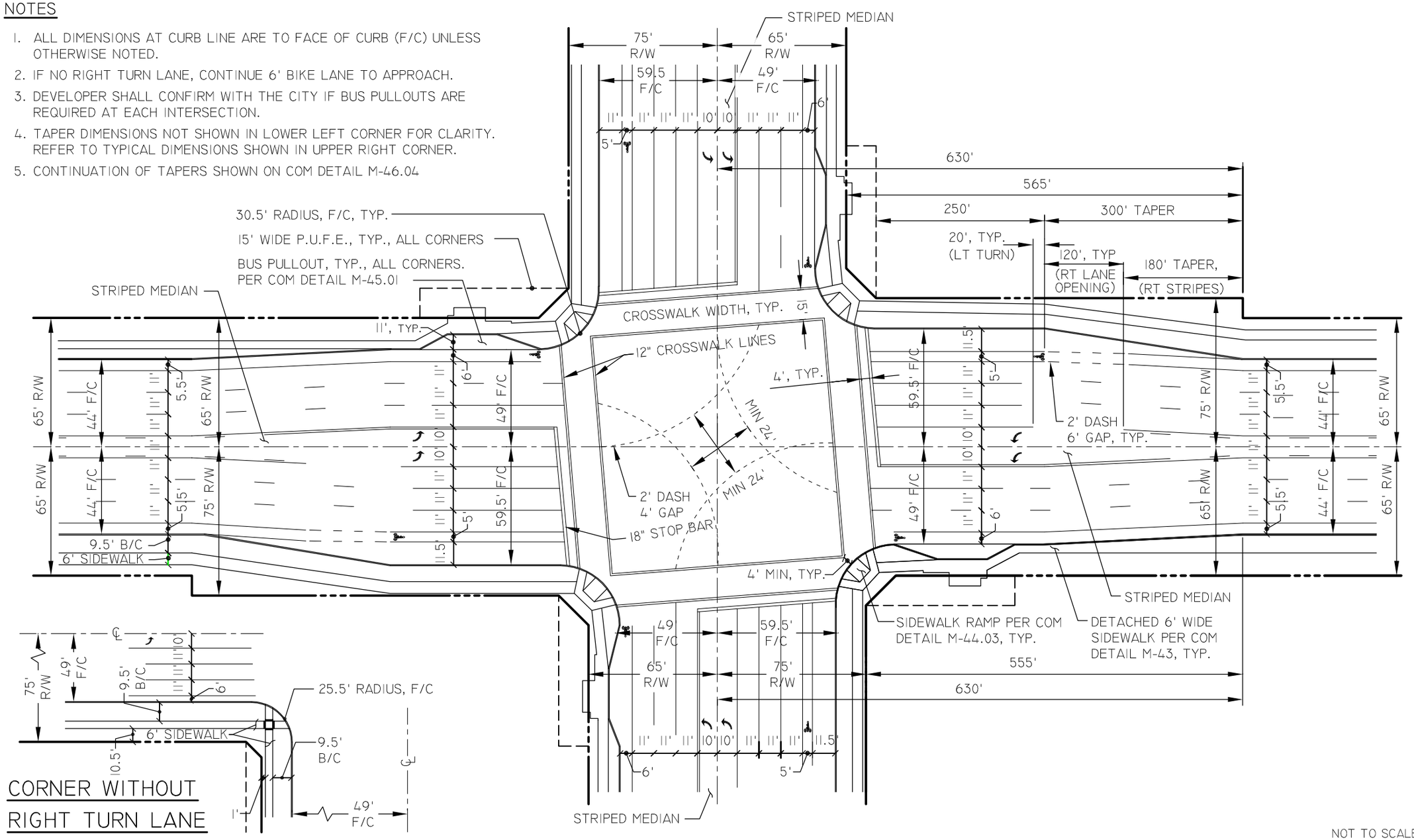

NOT TO SCALE

ARTERIAL STREET INTERSECTION (6 LANES) WITH STRIPED MEDIANS

DETAIL NO. M-46.04

REV. 01/31/2014

NOTE

ALL DIMENSIONS AT CURB LINE ARE TO FACE OF CURB (F/C) UNLESS OTHERWISE NOTED.

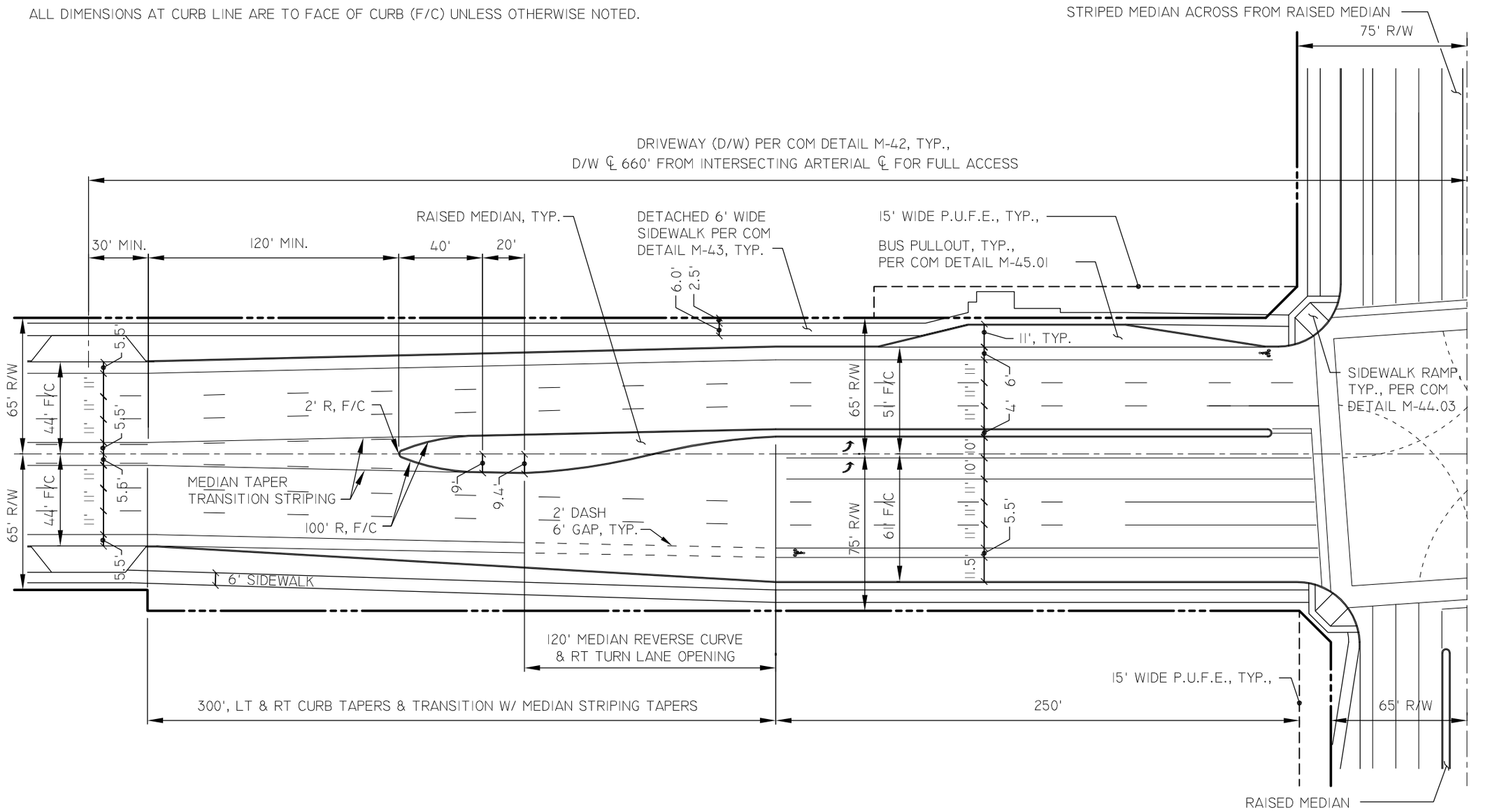

NOT TO SCALE

mesa·az

TRANSITION FROM STRIPED TO 4' RAISED MEDIAN

DETAIL NO.
M-46.05.1

REV. 01/31/2014

NOTES

1. ALL DIMENSIONS AT CURB LINE ARE TO FACE OF CURB (F/C) UNLESS OTHERWISE NOTED.
2. IF NO RIGHT TURN LANE, CONTINUE 6' BIKE LANE TO APPROACH.
3. DEVELOPER SHALL CONFIRM WITH THE CITY IF BUS PULLOUTS ARE REQUIRED AT EACH INTERSECTION.
4. FOR INTERSECTION LEGS WITH PEDESTRIAN REFUGE MEDIAN CROSSINGS, CROSSWALK SHALL BE PERPENDICULAR TO MEDIAN.

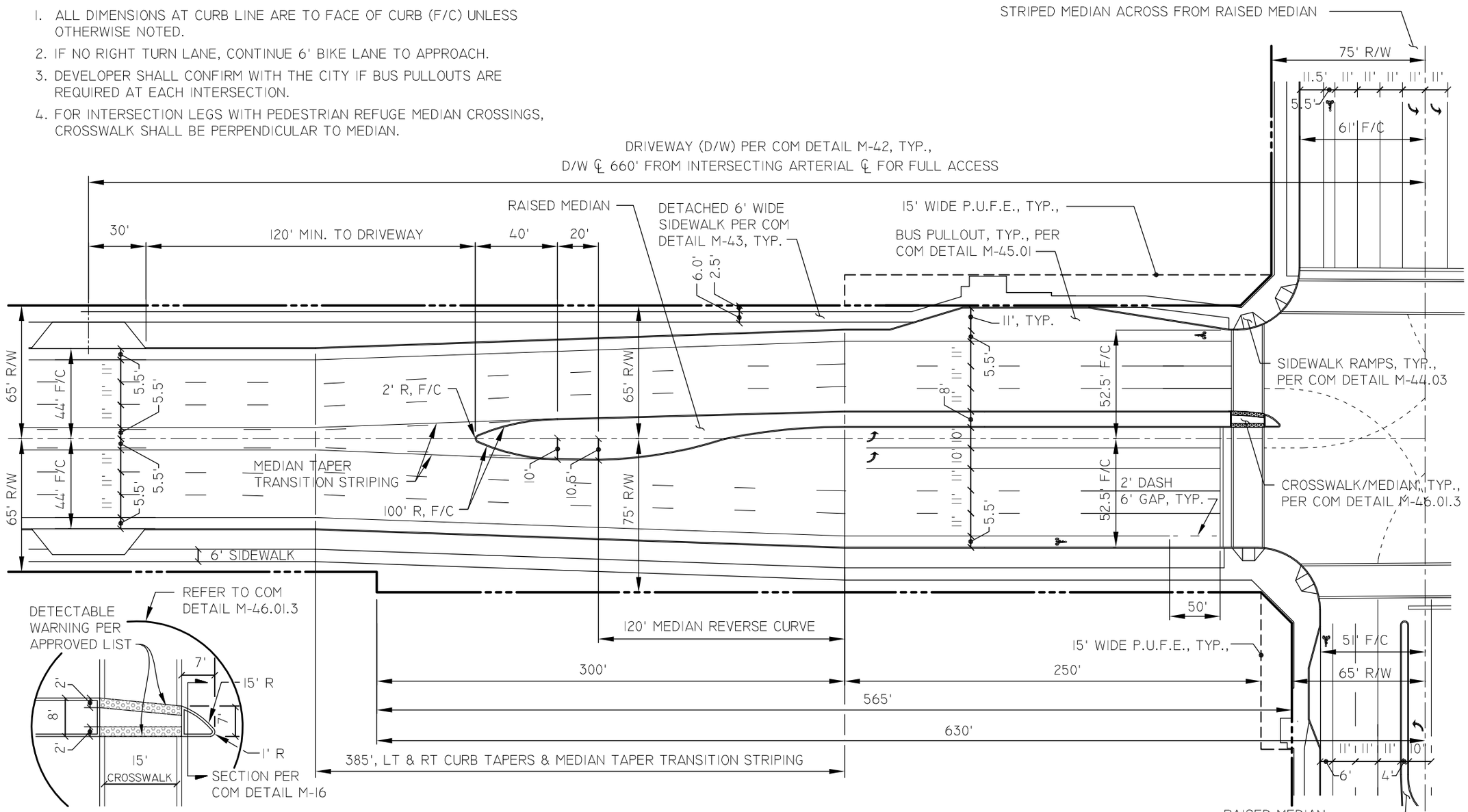

CROSSWALK MEDIAN DETAIL

NOT TO SCALE

mesa·az

TRANSITION FROM STRIPED TO 8' RAISED MEDIAN

DETAIL NO.
M-46.05.2

REV. 01/31/2014

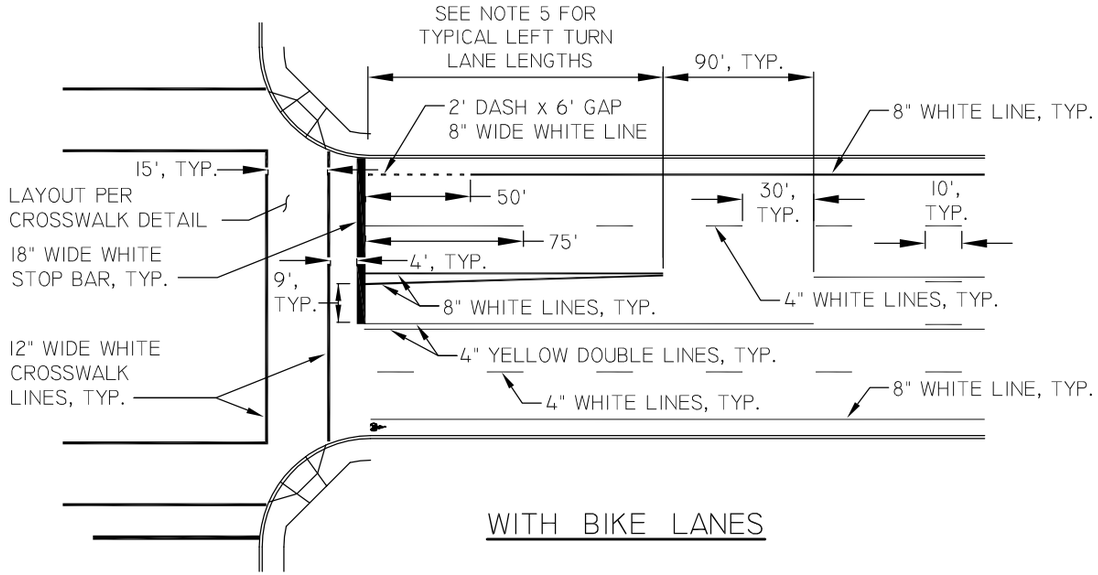

WITH BIKE LANES

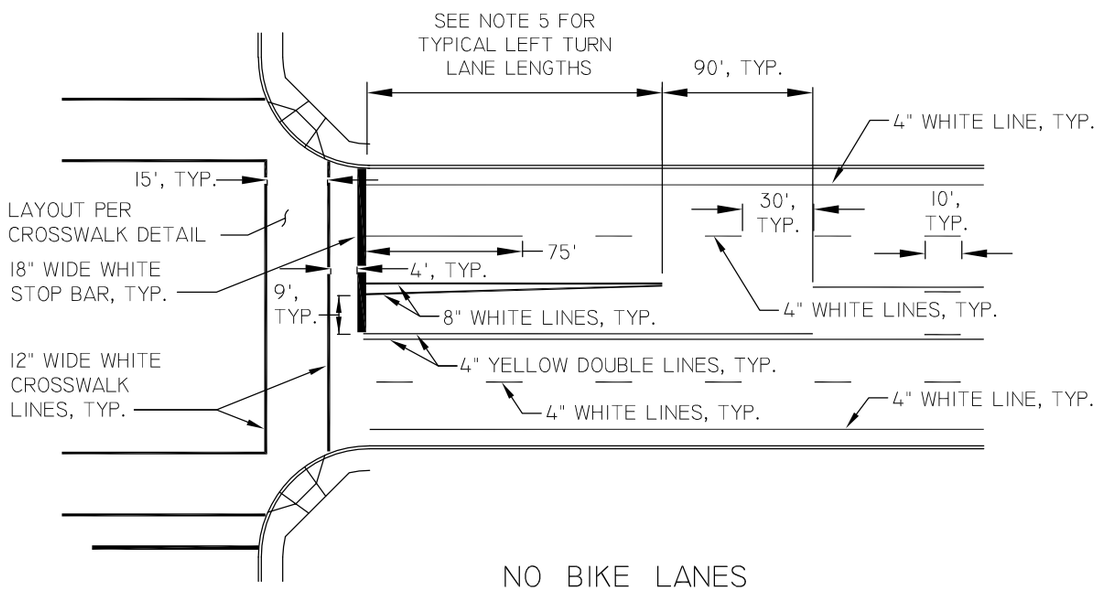

NO BIKE LANES

NOTES

1. THE CROSSWALK DETAIL IS TO BE SHOWN ON ALL PAVEMENT MARKING PLANS (IF APPLICABLE).
2. CROSSWALKS ARE 15' WIDE AND ARE PLACED 5' IN FRONT OF AND 10' BEHIND CENTER OF SIDEWALK RAMPS.
3. AT DUAL RAMPS, CROSSWALKS SHALL BE 15' WIDE AND CENTERED ON THE RAMPS.
4. INSPECTION OF THE CROSSWALK LAYOUT BY TRAFFIC ENGINEERING SHALL BE REQUESTED BY THE ENGINEERING INSPECTOR ON BEHALF OF THE STRIPING CONTRACTOR. CROSSWALKS SHALL NOT BE STRIPED UNTIL LAYOUT IS APPROVED BY TRAFFIC ENGINEERING.
5. LEFT TURN LANE LENGTH MAY VARY TO SUIT SPECIFIC CONDITIONS. USE 200' TYPICAL ON ARTERIAL STREETS AND 100' TYPICAL ON NON-ARTERIAL STREETS.

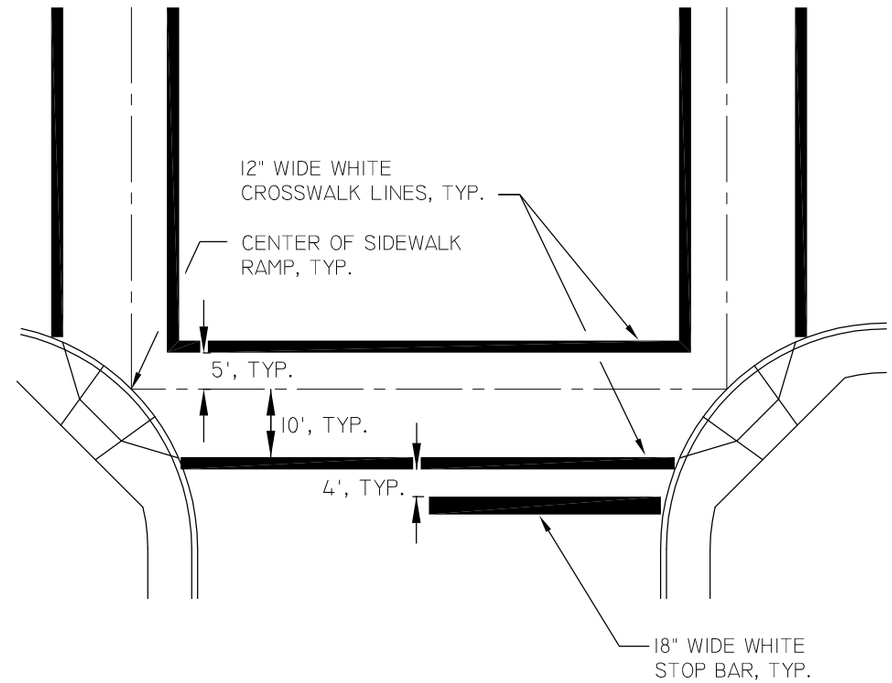

CROSSWALK DETAIL

NOTE:
ALL DIMENSIONS ARE TO THE INSIDE EDGE OF STRIPING.

NOT TO SCALE

mesa·az

TYPICAL INTERSECTION APPROACH STRIPING

DETAIL NO.
M-46.07

REV. 01/31/14

NOTES

1. R3-5R AND R3-5F PLAQUE AT ALL RIGHT TURN LANES.
2. INSTALL CARROT FOR EXTRA WIDE RIGHT TURN LANES (18' OR MORE). FOR LANES WIDER THAN 20', INSTALL CARROT AND "ARROW" PAVEMENT MARKING.
3. SEE COM DETAIL M-47.03 FOR ARROW MARKING DETAILS.
4. DASHED BIKE LANE OPENING MUST BE A MINIMUM OF 90' LONG.

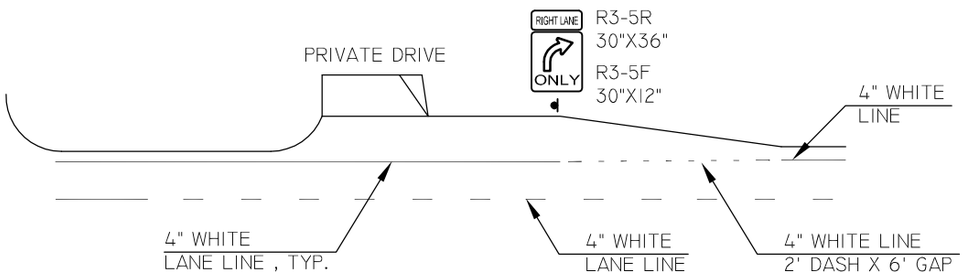

NO BIKE LANES

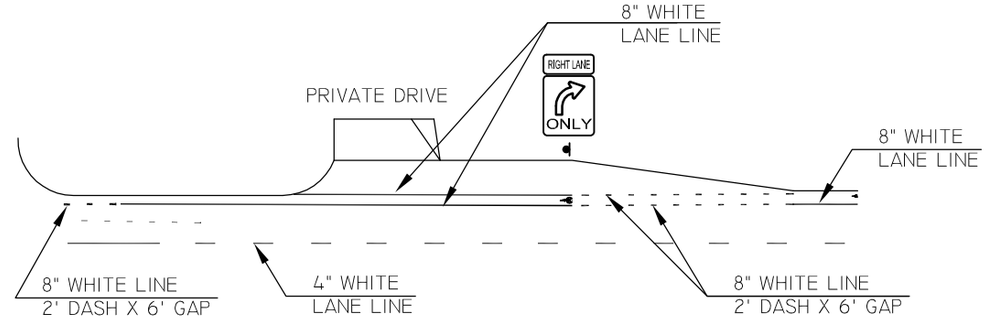

WITH BIKE LANES

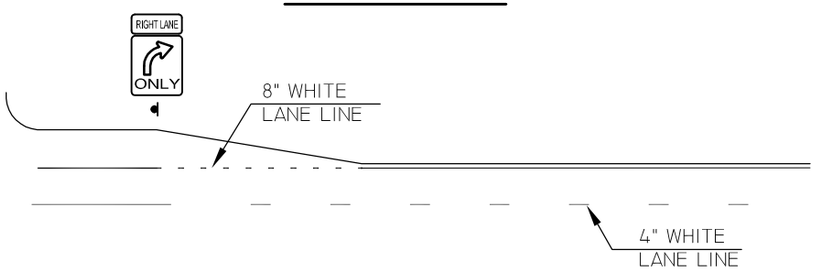

NO BIKE LANES

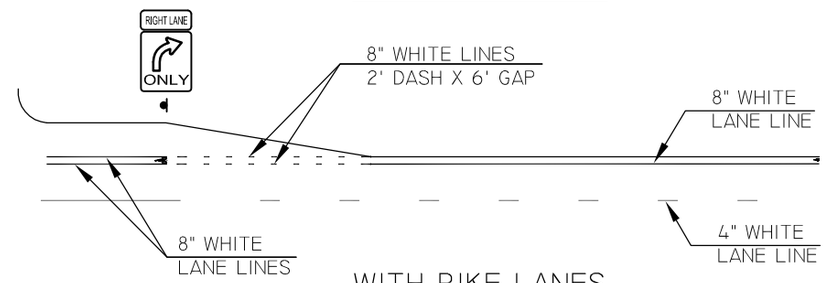

WITH BIKE LANES

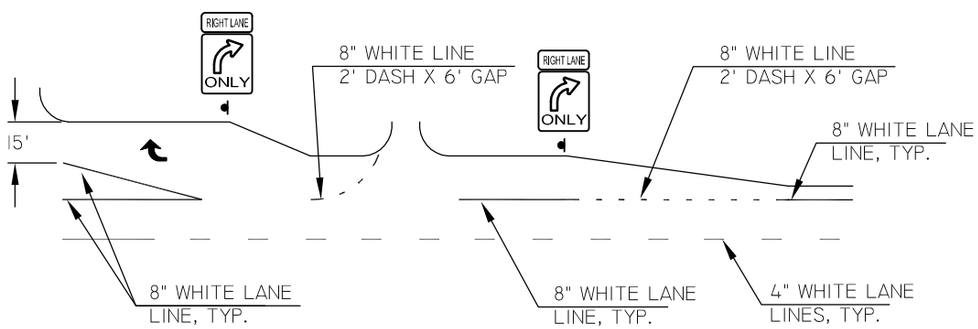

NO BIKE LANES

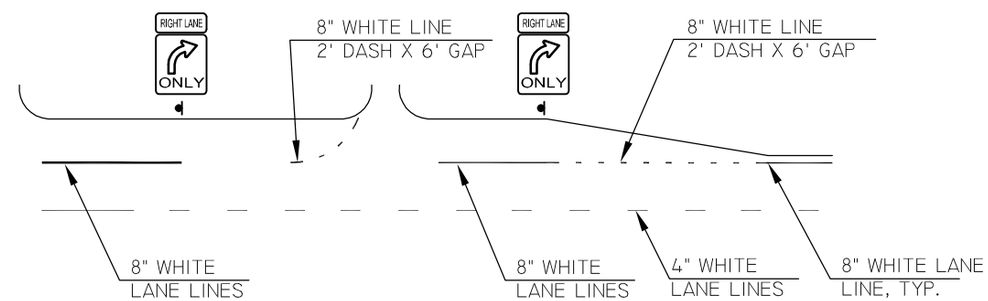

NO BIKE LANES

NOT TO SCALE

mesa·az

RIGHT TURN LANE TREATMENTS

DETAIL NO.
M-47.01

REV. 02/17/2015

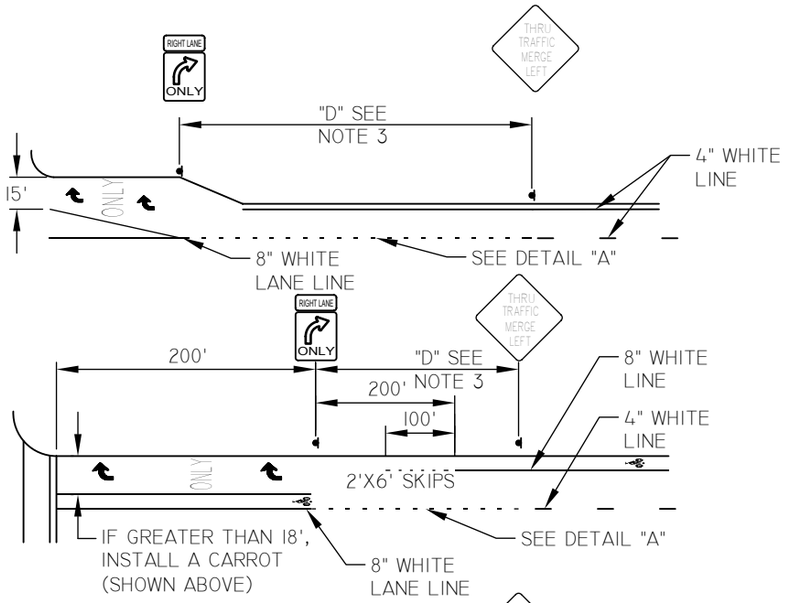

DESIGN SPEED (MPH)	D (FT)
20	175
25	250
30	325
35	400
40	475
45	550
50	625
55	700
60	775

EXCERPT FROM MUTCD 2009 (AZ SUPPLEMENT), TABLE 2C-4 CONDITION A

NOTES

1. INSTALL R3-5R AND R3-5F PLAQUE AT ALL RIGHT TURN LANES.
2. INSTALL ARROW AND "ONLY" PAVEMENT MARKINGS AT ALL RIGHT TURN TRAP LANES.
3. DISTANCE FOR "D" PER TABLE 2C-4 OF THE AZ SUPPLEMENT TO THE MUTCD, 2009 EDITION. "GUIDELINES FOR ADVANCE PLACEMENT OF WARNING SIGNS", USE CONDITION A.
4. SEE COM DETAIL M-47.03 FOR ARROW AND "ONLY" MARKING DETAILS.
5. ADDITIONAL SETS OF PAVEMENT ARROWS AND R3-5R SIGNS AND PLAQUES MAY BE USED WHEN TRAP LANES OCCUR AT NON-ARTERIAL STREETS, AND ELSEWHERE, ON THE BASIS OF AN ENGINEERING STUDY.
6. WHERE TRAP LANES EXTEND THROUGH MINOR STREETS, A SUPPLEMENTAL PLAQUE MAY BE ATTACHED BELOW THE R3-5R IN ADVANCE OF THE MINOR STREET TO INDICATE THE NAME OF THE STREET AT WHICH VEHICLES MUST TURN RIGHT. IF APPLICABLE, "AT SIGNAL" PLAQUE MAY BE USED.

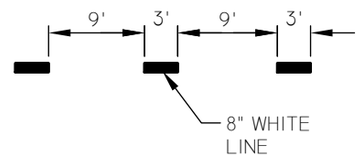

DETAIL "A" - 3'x9' SKIPS

AT YY ST

AT SIGNAL

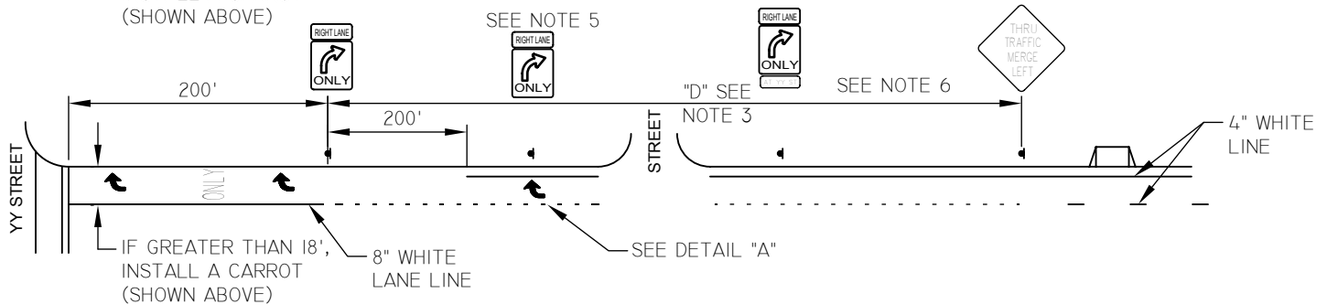

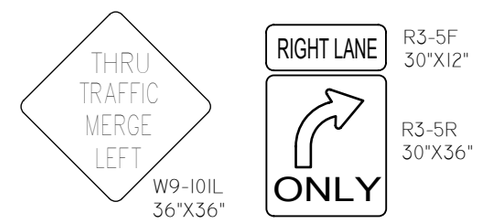

NOT TO SCALE

mesa·az

RIGHT TURN TRAP LANE TREATMENTS

DETAIL NO. M-47.02

REV. 02/18/2015

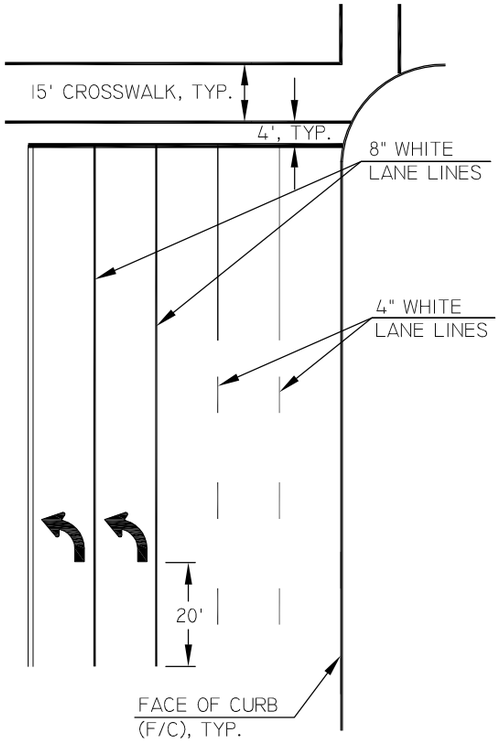

DUAL LEFT TURN LANES

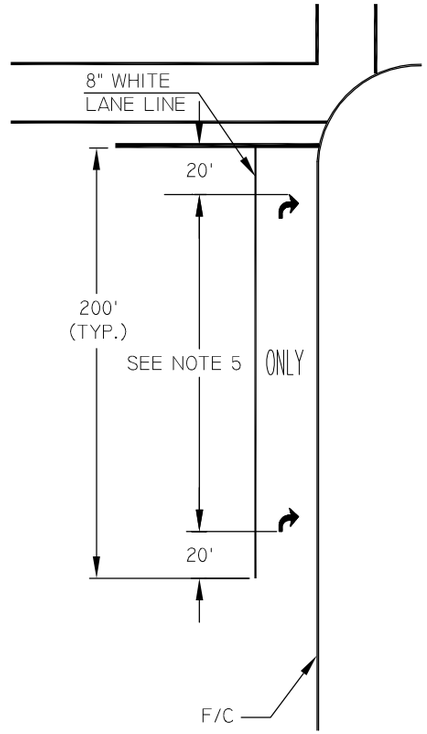

TRAP RIGHT TURN LANES

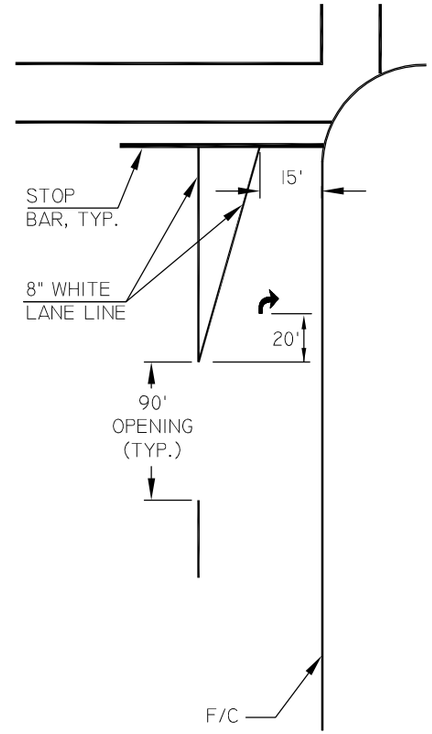

RIGHT TURN LANES
20' WIDE OR MORE

NOTES

1. INSTALL LEFT ARROWS 20' BEYOND BEGINNING OF LEFT TURN BAYS.
2. DO NOT INSTALL "ONLY" WORD MARKING IN LEFT TURN LANES UNLESS SPECIFIED.
3. DO NOT INSTALL LEFT ARROWS IN SINGLE LEFT TURN LANES UNLESS SPECIFIED.
4. INSTALL RIGHT ARROW IN WIDE RIGHT TURN LANES (AT LEAST 20' WIDE). SEE COM DETAILS M-47.01, M-47.02 FOR "RIGHT TURN TREATMENTS".
5. INSTALL COMBINATION ARROW-"ONLY"-ARROW IN TRAP RIGHT TURN LANES. THE FIRST ARROW SHOULD BE 20' FROM THE BEGINNING OF THE TURN LANE. THE SECOND ARROW SHOULD BE 20' IN FRONT OF STOP BAR (OR CURB RETURN AT UNSIGNALIZED LOCATIONS). THE "ONLY" SHOULD BE PLACED MID WAY BETWEEN THE ARROWS.
6. "ONLY" LEGEND AND ARROW MARKING PER 2009 MUTCD.
7. ALL LEGENDS AND SYMBOLS SHALL BE APPLIED IN 0.075 INCH PREFORMED THERMOPLASTIC "HOT" TAPE, PER ADOT STANDARD SPECIFICATIONS.

NOT TO SCALE

mesa·az

TYPICAL APPLICATION OF PAVEMENT ARROWS

DETAIL NO.
M-47.03

REV. 01/31/14

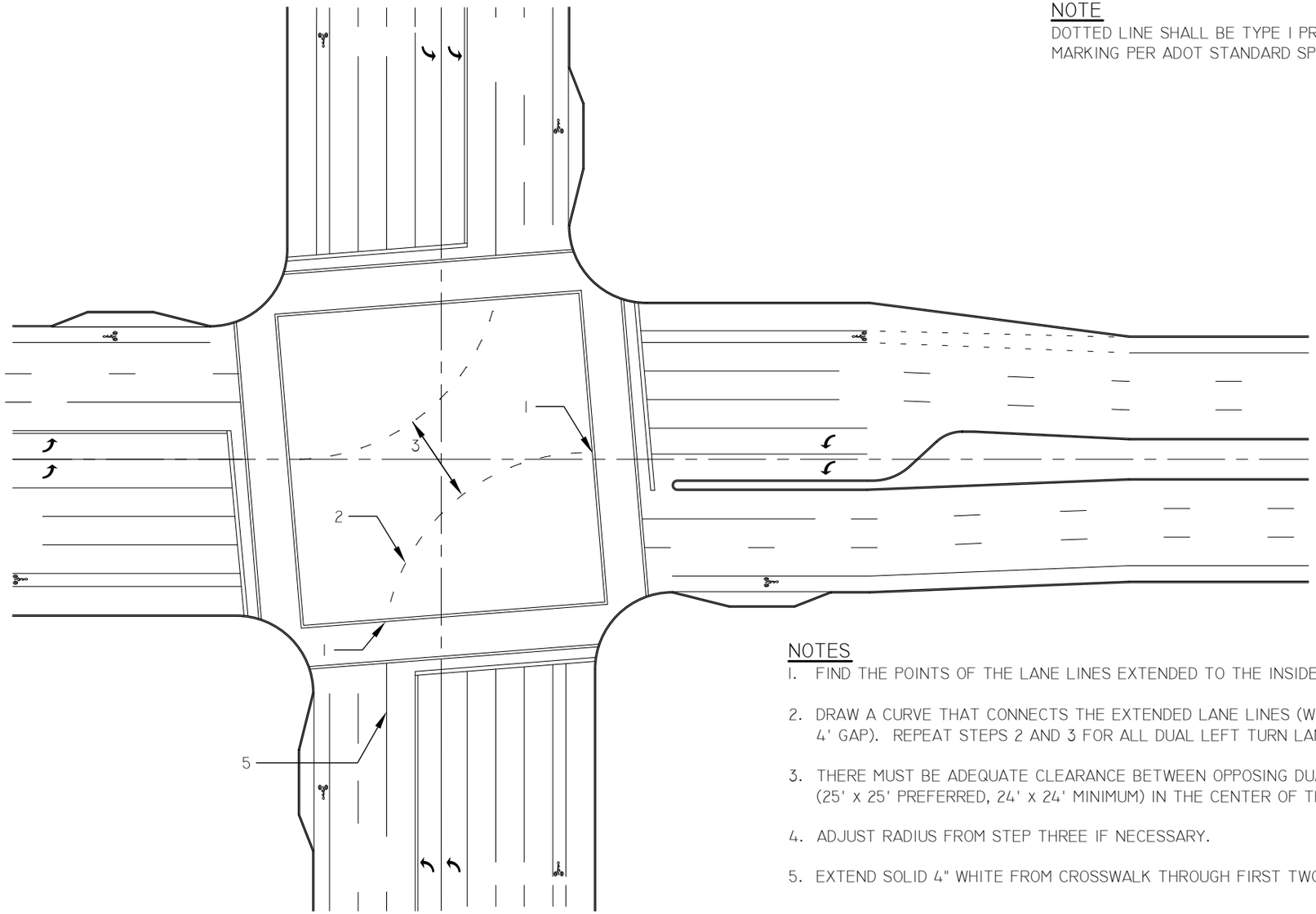

NOTE

DOTTED LINE SHALL BE TYPE I PREFORMED PLASTIC PAVEMENT MARKING PER ADOT STANDARD SPECIFICATION SECTION 705.

NOTES

1. FIND THE POINTS OF THE LANE LINES EXTENDED TO THE INSIDE OF THE CROSSWALK LINE.
2. DRAW A CURVE THAT CONNECTS THE EXTENDED LANE LINES (WHITE, 4" WIDE, 2' SOLID/ 4' GAP). REPEAT STEPS 2 AND 3 FOR ALL DUAL LEFT TURN LANES.
3. THERE MUST BE ADEQUATE CLEARANCE BETWEEN OPPOSING DUAL LEFT TURN LANES (25' X 25' PREFERRED, 24' X 24' MINIMUM) IN THE CENTER OF THE INTERSECTION.
4. ADJUST RADIUS FROM STEP THREE IF NECESSARY.
5. EXTEND SOLID 4" WHITE FROM CROSSWALK THROUGH FIRST TWO SKIPS.

NOT TO SCALE

mesa·az

DUAL LEFT TURN LANE EXTENSIONS

DETAIL NO.
M-47.04

REV. 01/31/14

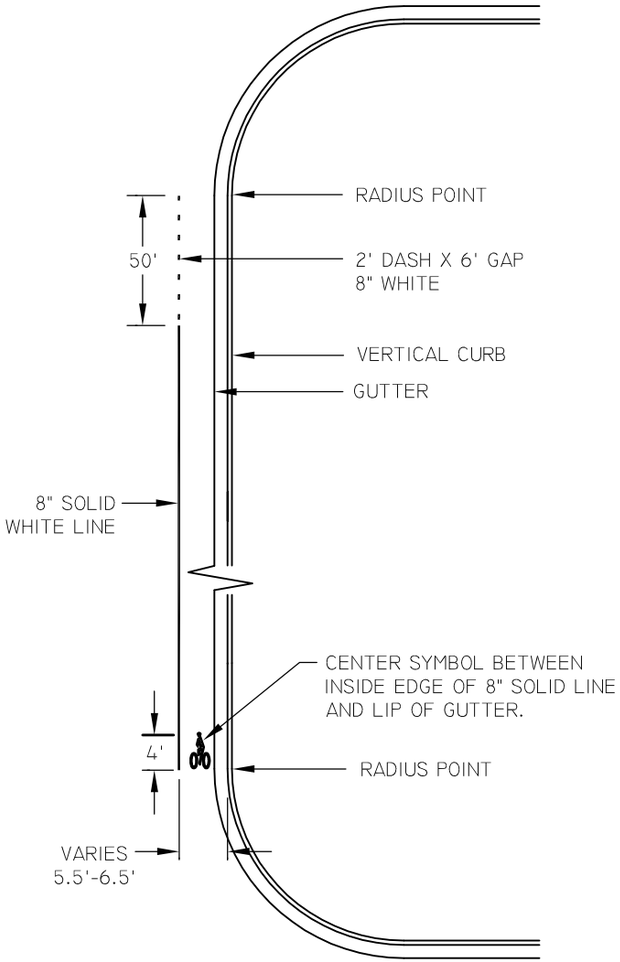

TYPICAL BIKE LANE LAYOUT

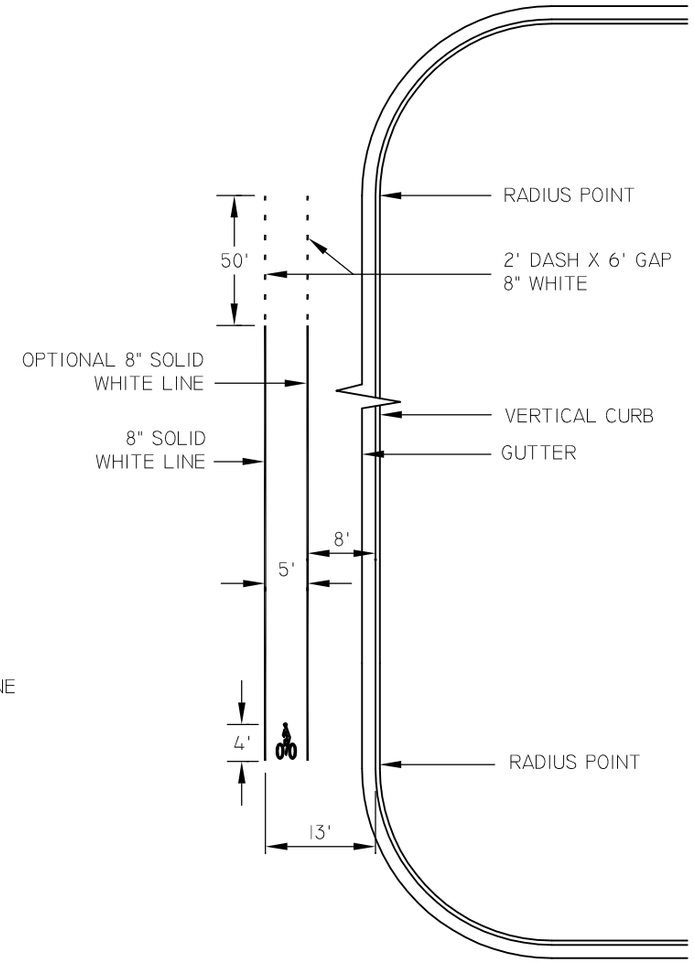

TYPICAL LAYOUT FOR SHARED BIKE/PARKING LANES

NOTES

1. INSTALL BIKE LANE MARKINGS AFTER EACH INTERSECTION.
2. SYMBOL SPACING NOT TO EXCEED 1000 FT.
3. BIKE RIDER FACES TOWARDS TRAFFIC.
4. BIKE RIDER WEARS HELMET.
5. ALL LEGENDS AND SYMBOLS SHALL BE APPLIED IN 0.075 INCH PREFORMED THERMOPLASTIC "HOT" TAPE PER ADOT STANDARD SPECIFICATIONS.
6. CONTACT BRANDON HATCH, CITY OF MESA TRAFFIC OPERATIONS, FOR LAYOUT STENCIL AT (480) 644-4565.

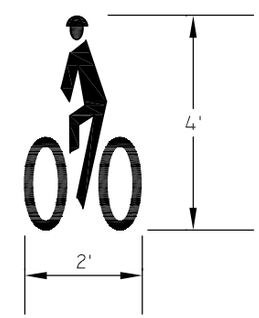

BIKE RIDER DETAIL

NOT TO SCALE

mesa·az

TYPICAL BIKE LANE LAYOUTS

DETAIL NO.
M-47.05

REV. 02/11/2015

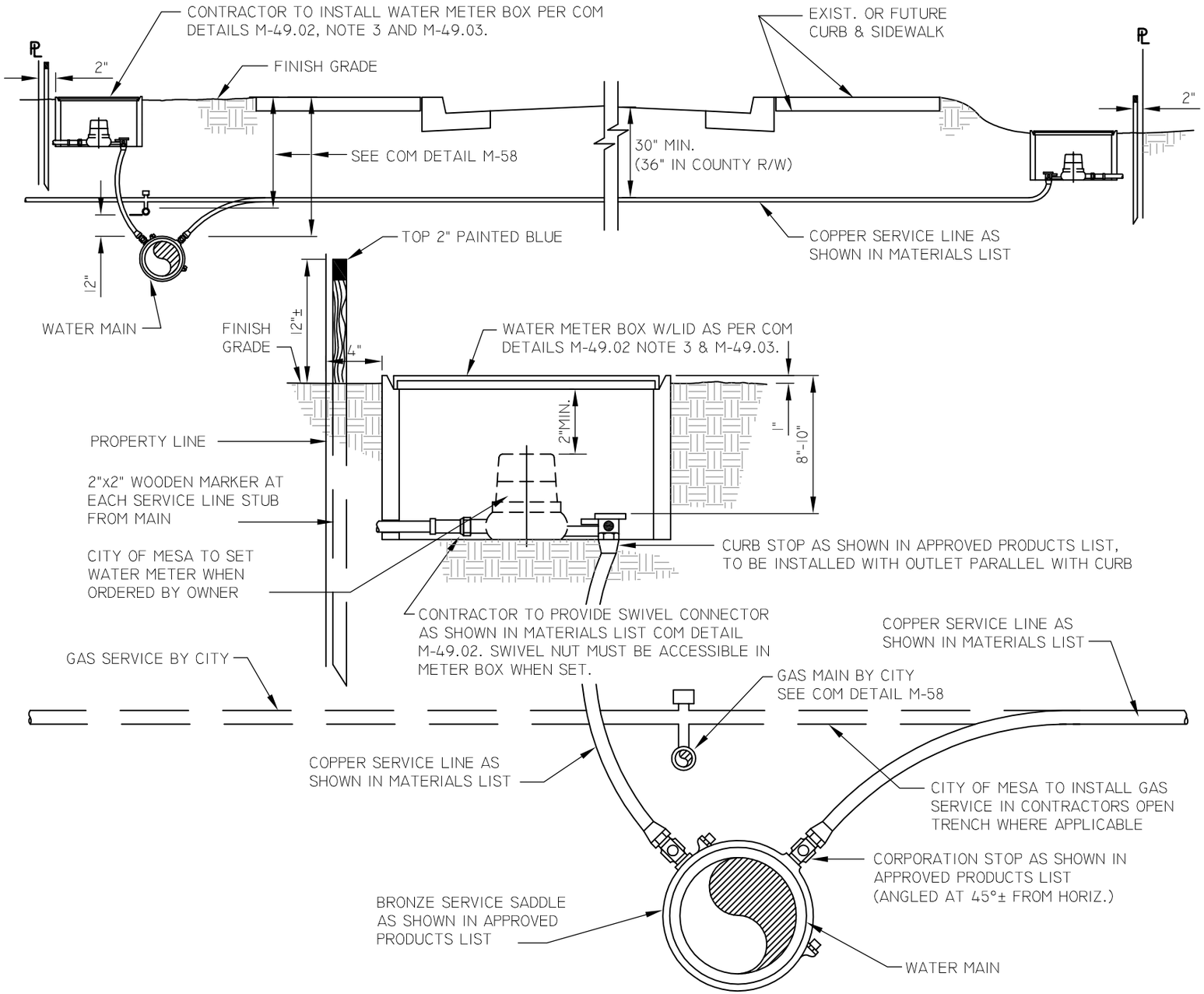

NOTES

1. ENGINEER TO SET "BLUE TOPS" FOR ALL WATER METER BOXES TO MATCH BACK OF SIDEWALK GRADE OR TOP OF CURB GRADE IF CURB ONLY. INSTALL TOP OF SERVICE CURB STOP 8" MIN. TO 10" MAX. BELOW "BLUE TOP", EXCEPT FOR SPECIAL CONDITIONS (IRRIG., LARGE METER, ETC.).
2. MECHANICAL COUPLINGS FOR SERVICE EXTENSIONS MAY BE ALLOWED ON A PER INSTALLATION BASIS WITH PRIOR WRITTEN APPROVAL FROM THE WATER RESOURCES DEPARTMENT.
3. NORMAL INSTALLATION OF WATER METERS AND BOXES SHALL BE PERPENDICULAR TO THE CENTER LINE OF THE STREET WHERE POSSIBLE. HOWEVER, WHEN A SINGLE METER IS INSTALLED IN A SUBDIVISION WITH PARALLEL PLACED METERS AND BOXES, THE NEW METER AND BOX MAY BE INSTALLED THE SAME AS THE REST OF THE SUBDIVISION (PARALLEL).
4. WATER METER SIZES 1", 1 1/2" AND 2" MAY BE REDUCED FROM AN EXISTING WATER SERVICE AND VALVE TO A SIZE WHICH IS ADEQUATE TO SUPPLY THE FIXTURE COUNT DEMAND UPON APPROVAL OF DEVELOPMENT SERVICE'S BUILDING INSPECTION. THE PARTY REQUESTING THE REDUCTION SHALL BE RESPONSIBLE FOR THE COST OF INSTALLING AN APPROVED ADAPTER BETWEEN THE EXISTING SERVICE VALVE AND THE INLET OF THE WATER METER AND A MINIMUM OF 48" OF METER SIZE APPROVED PIPING DOWNSTREAM OF THE WATER METER. WHERE BACKFLOW PREVENTION IS REQUIRED THE BACKFLOW DEVICE MUST BE THE SAME SIZE AS THE REQUESTED WATER METER. THE LENGTH OF THE BACKFLOW PREVENTER AND ITS METER SIZE PIPING SHALL BE COUNTED AS PART OF THE REQUIRED 48" PIPING REDUCTION.
5. METER AND ALL FITTINGS TO BE CENTERED IN BOX AND ACCESSIBLE.

CAUTION!

BEFORE SERVICES ARE INSTALLED, THE DRIVEWAY LOCATIONS SHOULD BE VERIFIED AND THE SERVICE CONSTRUCTED TO MISS THEM.

NOT TO SCALE

mesa·az

WATER SERVICE INSTALLATION

DETAIL NO. M-49.01

REV. 02/11/2015

MATERIALS LIST	SERVICE LINE SIZES			
	3/4"	1"	1 1/2"	2"
SERVICE SADDLE (1) (WITH I.P. THREADS)	SEE APPROVED PRODUCTS LIST		SEE APPROVED PRODUCTS LIST	
CORPORATION STOP (BALL STYLE) (WITH I.P. THREADS)	SEE APPROVED PRODUCTS LIST		SEE APPROVED PRODUCTS LIST	
CURB STOP WITH LOCKING WINGS (BALL STYLE)	SEE APPROVED PRODUCTS LIST			
OUTLET METER COUPLING	SEE APPROVED PRODUCTS LIST	SEE APPROVED PRODUCTS LIST	SEE APPROVED PRODUCTS LIST	SEE APPROVED PRODUCTS LIST
SERVICE LINE	COPPER (2) (TYPE K-SOFT)	COPPER (2) (TYPE K-SOFT)	COPPER (2) (TYPE K-HARD)	COPPER (2) (TYPE K-HARD)

(1) SINGLE-STRAP SERVICE SADDLES ARE PERMITTED ON WATER MAINS 8" AND SMALLER. DOUBLE-STRAP SERVICE SADDLES ARE REQUIRED ON WATER MAINS LARGER THAN 8". SERVICE SADDLES SHALL BE ALL-BRASS AND HAVE I.P. THREADS. SERVICE SADDLES PER APPROVED PRODUCTS LIST.

(2) ALL COPPER PIPE JOINTS SHALL BE SOLDERED. THE SOLDER ALLOY SHALL COMPLY WITH ASTM B 32 HAVING A SILVER CONTENT OF NOT LESS THAN 3.4% INTENDED FOR JOINING COPPER PIPES FOR POTABLE WATER SYSTEMS (GRADES SN 94, SN 95, OR SN 96). THE FLUX SHALL BE TYPE OA FOR GENERAL SOLDERING ON COPPER.

(3) BOLTS AND NUTS USED TO CONNECT 1.5" AND 2" WATER METER FLANGES SHALL BE 316 GRADE STAINLESS STEEL WITH THREADS COATED WITH FOOD GRADE ANTI-SEIZE COMPOUND.

NOTES:

1. CITY OF MESA DOES NOT ALLOW FLARED-TYPE CONNECTIONS ON THE CITY SIDE OF THE METER.
2. NO TAPPED COUPLINGS WILL BE ALLOWED.
3. WATER METER BOX AND LID:

METER SIZE	METER BOX NUMBER
3/4"	SEE APPROVED PRODUCTS LIST
1"	

4. SEE COM DETAIL M-29 FOR 1-1/2" AND 2" WATER METERS.
5. BRANCHES BEFORE THE METER ARE NOT ALLOWED; I.E. ONLY ONE METER PER SERVICE TAP EXCEPT FOR LANDSCAPE METERS AS SHOWN IN COM DETAIL M-49.03.
6. FOR 3/4" AND 1" SERVICES, A MINIMUM OF 1-1/2 FEET COPPER "PIGTAIL" ON CUSTOMER'S SIDE OF METER BEFORE CHANGING TO OTHER MATERIAL. FOR 1-1/2" & 2" SERVICES, A MINIMUM OF 4 FEET COPPER "PIGTAIL" ON CUSTOMER'S SIDE BEFORE CHANGING TO OTHER MATERIAL.
7. WATER SERVICE LINES REDUCING DOWN ONE SIZE (2" TO 1-1/2", 1-1/2" TO 1", 1" TO 3/4") SHALL REDUCE DOWN A MINIMUM OF 48" PRIOR TO THE FACE OF THE WATER BOX.
8. FOR WATER METER RELOCATIONS OR REPLACEMENTS WHERE EXISTING WATER SERVICE LINE ON THE CUSTOMER'S SIDE OF METER WILL REMAIN-IN-PLACE. THE PIPE MATERIAL BETWEEN THE COPPER "PIGTAIL" REQUIRED IN NOTE 6 AND THE POINT OF RECONNECTION TO THE CUSTOMER'S SERVICE LINE SHALL CONFORM TO THE FOLLOWING REQUIREMENTS: IF CUSTOMER'S EXISTING SERVICE LINE IS COPPER, COPPER PIPE OR TUBING PER THE CURRENT VERSION OF IPC AS ADOPTED BY CITY OF MESA SHALL BE USED. FOR ALL OTHER EXISTING MATERIAL TYPES, ONLY COPPER OR PVC COMPLYING WITH IPC MAY BE USED.
9. FITTINGS AND VALVES IN CONTACT WITH POTABLE WATER SHALL BE NO/LOW LEAD, COMPLIANT WITH EPA SAFE DRINKING ACT REQUIREMENTS.

mesa·az

WATER SERVICE INSTALLATION MATERIALS LIST

DETAIL NO.
M-49.02

REV. 02/11/2015

NOTES:

1. SERVICE LINE BETWEEN WATER METERS AND WATER MAIN SHALL BE COPPER PER COM DETAIL M-49.01 AND M-49.02.

2. NORMAL INSTALLATION OF WATER METERS AND BOXES SHALL BE PERPENDICULAR TO THE CENTER LINE OF THE STREET. HOWEVER, WHEN A SINGLE METER IS INSTALLED IN A SUBDIVISION WITH PARALLEL PLACED METERS & BOXES, THE NEW METER AND BOX MAY BE INSTALLED THE SAME AS THE REST OF THE SUBDIVISION (PARALLEL).

3. BACKFLOW PREVENTION DEVICES MAY ALSO BE REQUIRED ON LINES FOR IRRIGATION & DOMESTIC METERS FOR COMMERCIAL USE. REFER TO THE "ENGINEERING & DESIGN STANDARDS" MANUAL FOR REQUIREMENTS.

4. WHEN TWO METERS ARE ON THE SAME SERVICE LINE, THE SERVICE LINE SHALL BE ONE SIZE LARGER THAN THE LARGEST METER.

SINGLE METER INSTALLATION

MANIFOLD METER INSTALLATION

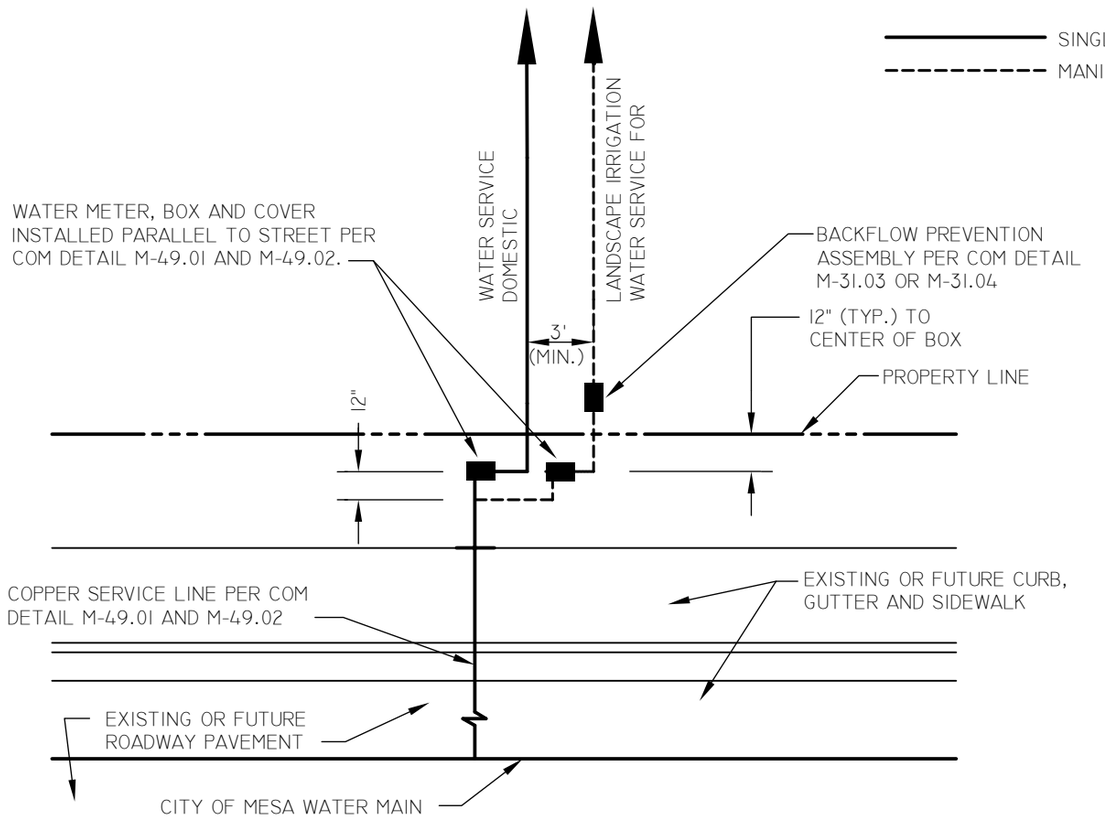

PLAN VIEW - PARALLEL INSTALLATION

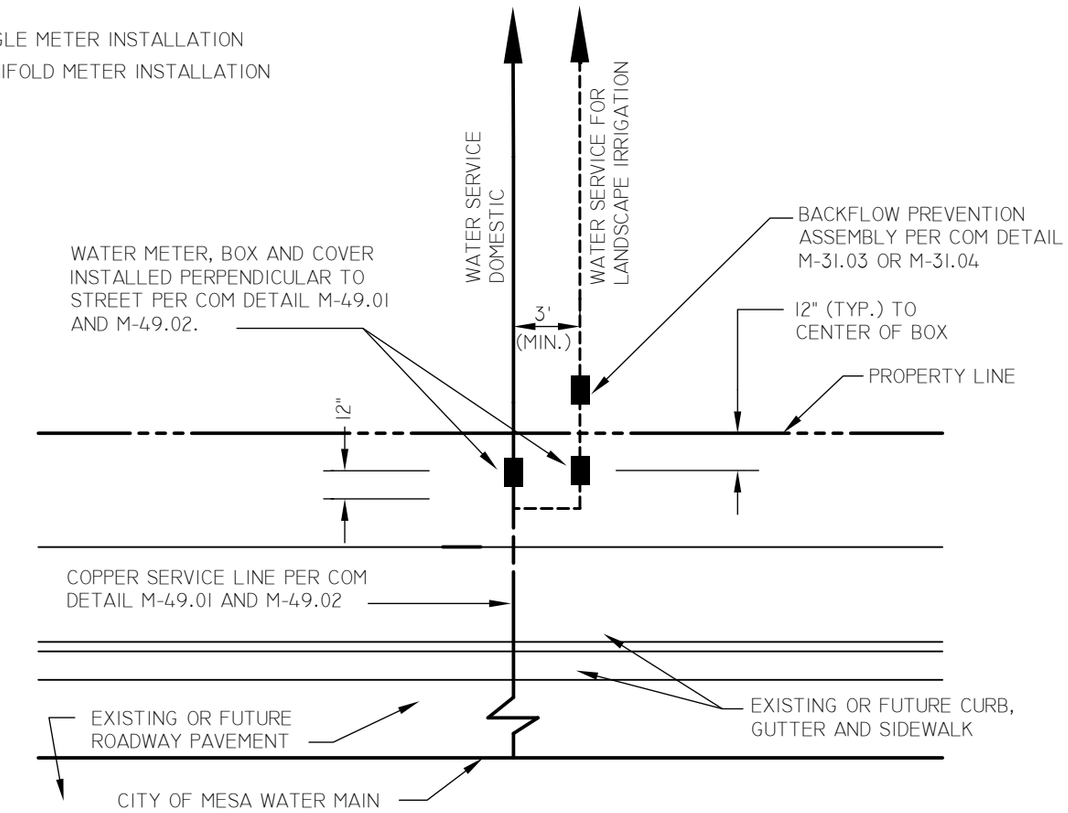

PLAN VIEW - PERPENDICULAR INSTALLATION

NOT TO SCALE

mesa·az

SINGLE AND MANIFOLD WATER METER INSTALLATIONS

DETAIL NO. M-49.03

REV. 10/23/14

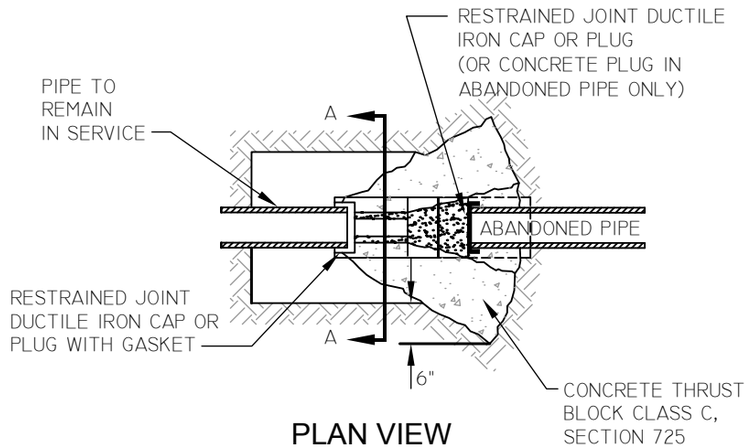

PLAN VIEW

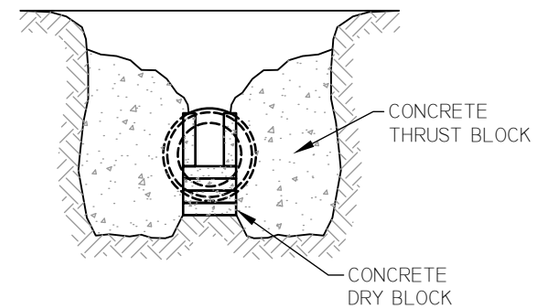

VIEW A-A

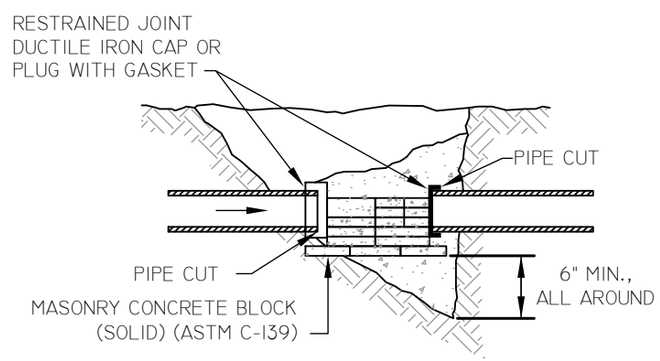

PROFILE VIEW

WATER LINE CUT AND PLUG NOTES:

1. CAP AND PLUGS MUST BE ADEQUATELY "DRY BLOCKED".
2. DRY BLOCKS SHALL BE STANDARD SIZE SOLID MASONRY CONCRETE BLOCKS. (ASTM C-139)
3. THE QUANTITY AND ARRANGEMENT OF THE BLOCKING MUST WITHSTAND LINE PRESSURE BY HOLDING THE CAP OR PLUG IN POSITION.
4. DRY BLOCKING SHALL BE PROPERLY SHIMMED TIGHT AND SECURE AGAINST THE CAP BEFORE LINE PRESSURE IS RESTORED.
5. CONCRETE THRUST BLOCKS SHALL NOT BE POURED UNTIL LINE PRESSURE IS RESTORED AND THE CAP OR PLUG IS INSPECTED FOR LEAKAGE.
6. CONCRETE SHALL NOT BE POURED OVER ANY PORTION OF THE ABANDONED PIPE.
7. MINIMUM THRUST BLOCK AREA PER M.A.G. DETAIL 380.
8. WHERE A 4" OR LARGER LINE IS SPECIFIED TO BE ABANDONED, THE CUT AND PLUG SHOULD OCCUR AT THE SUPPLY MAIN TO AVOID CREATING AN UNUSED DEADEND LINE.

NOT TO SCALE

mesa·az

WATER LINE CUT AND PLUG FOR 12" DIAMETER MAIN AND SMALLER

DETAIL NO.
M-50

REV. 02/24/2015

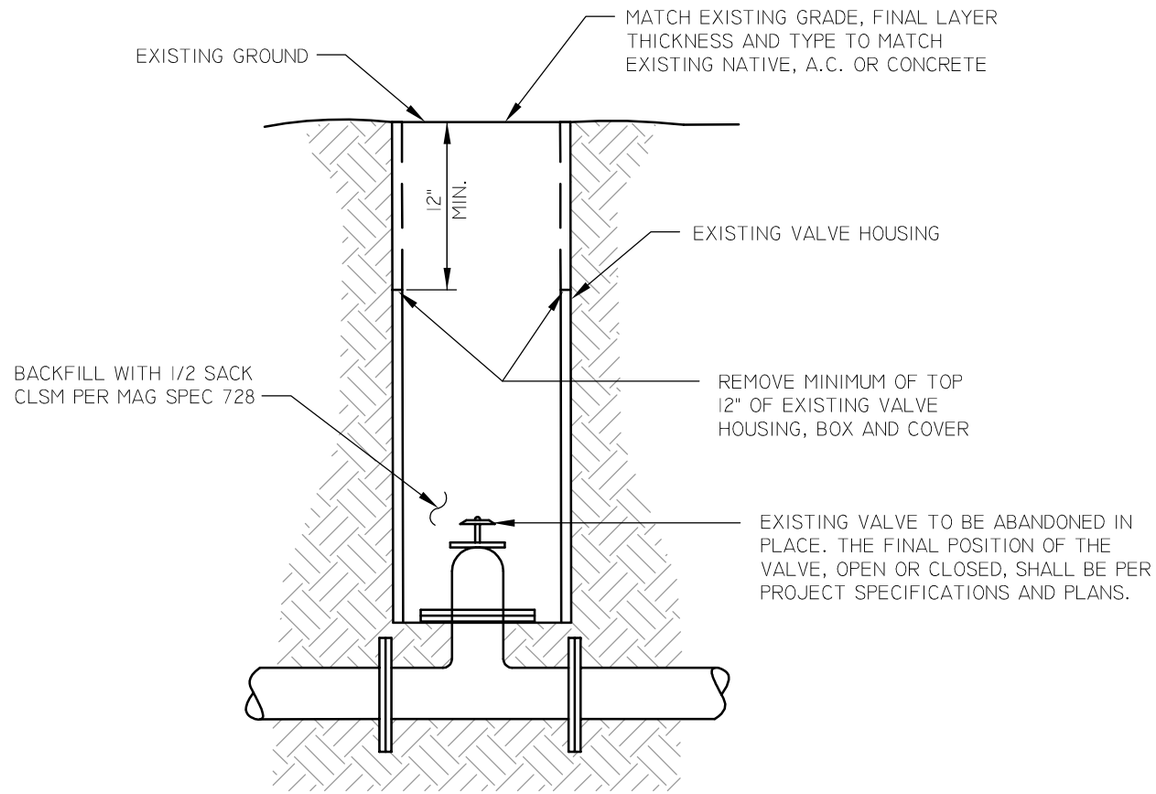

VALVE ABANDONMENT

NOT TO SCALE

mesa·az

WATER VALVE ABANDONMENT

DETAIL NO.
M-51

REV. 04/06/2015

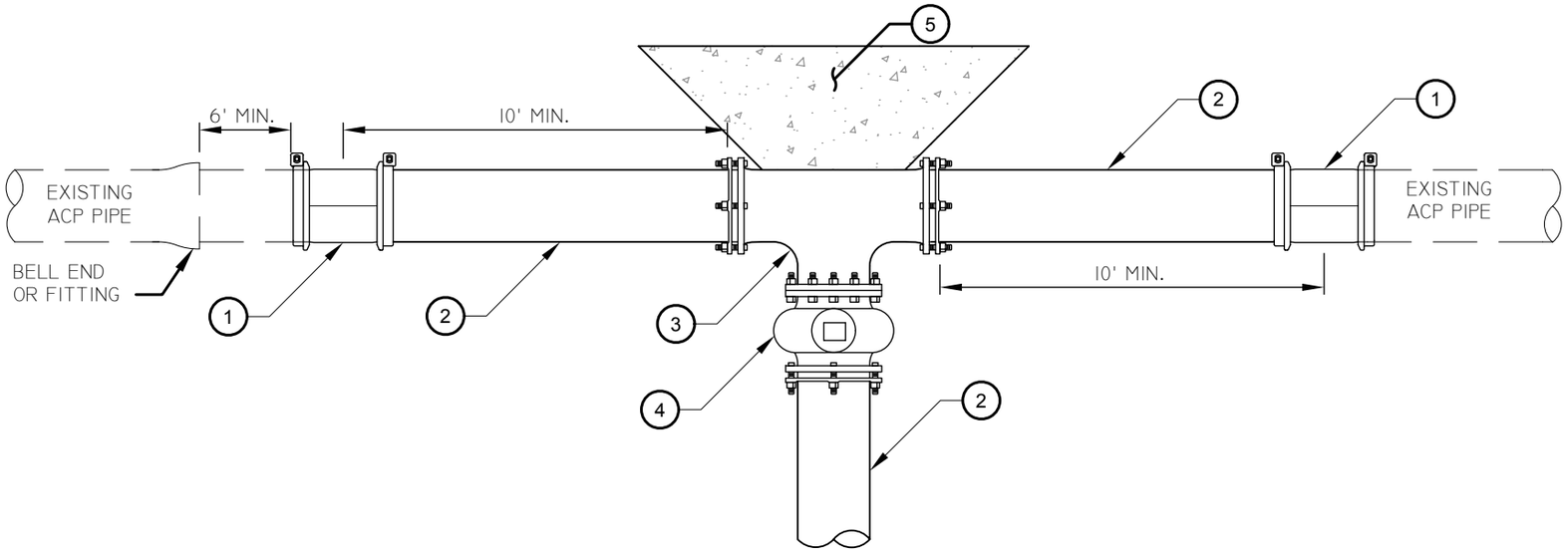

DUCTILE IRON PIPE TEE CUT IN DETAIL FOR EXISTING ACP PIPE

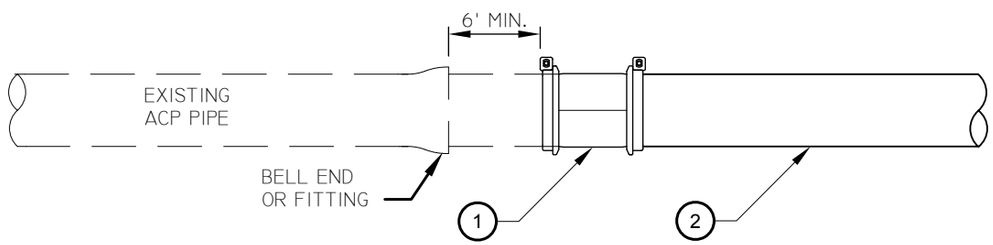

IN-LINE DUCTILE IRON PIPE TO ACP CONNECTION DETAIL

INSTALLATION NOTES:

1. HIGH RANGE FLEXIBLE COUPLING PER CITY OF MESA APPROVED PRODUCTS LIST.
2. NEW DIP WATER PIPE.
3. MJ X MJ X FL DIP TEE.
4. FL X MJ GATE VALVE.
5. THRUST BLOCKING PER MAG STANDARD DETAIL 380.

NOTES:

1. INSTALLATION AND CORROSION PROTECTION PER MAG SPECIFICATION SECTION 600.
2. ALL JOINTS TO BE RESTRAINED PER MAG STANDARDS. ENGINEER TO EVALUATE EACH CUT IN CONDITION TO DETERMINE THE NECESSITY FOR ADDITIONAL THRUST BLOCKING ALONG THE EXISTING ACP PIPE.
3. ALL FITTINGS, VALVES, AND PIPE SHALL MEET CITY OF MESA SPECIFICATIONS, DETAILS, AND APPROVED PRODUCTS LIST.

NOT TO SCALE

mesa·az

ACP TO DIP TEE CUT IN

DETAIL NO.
M-52

REV. 09/09/14

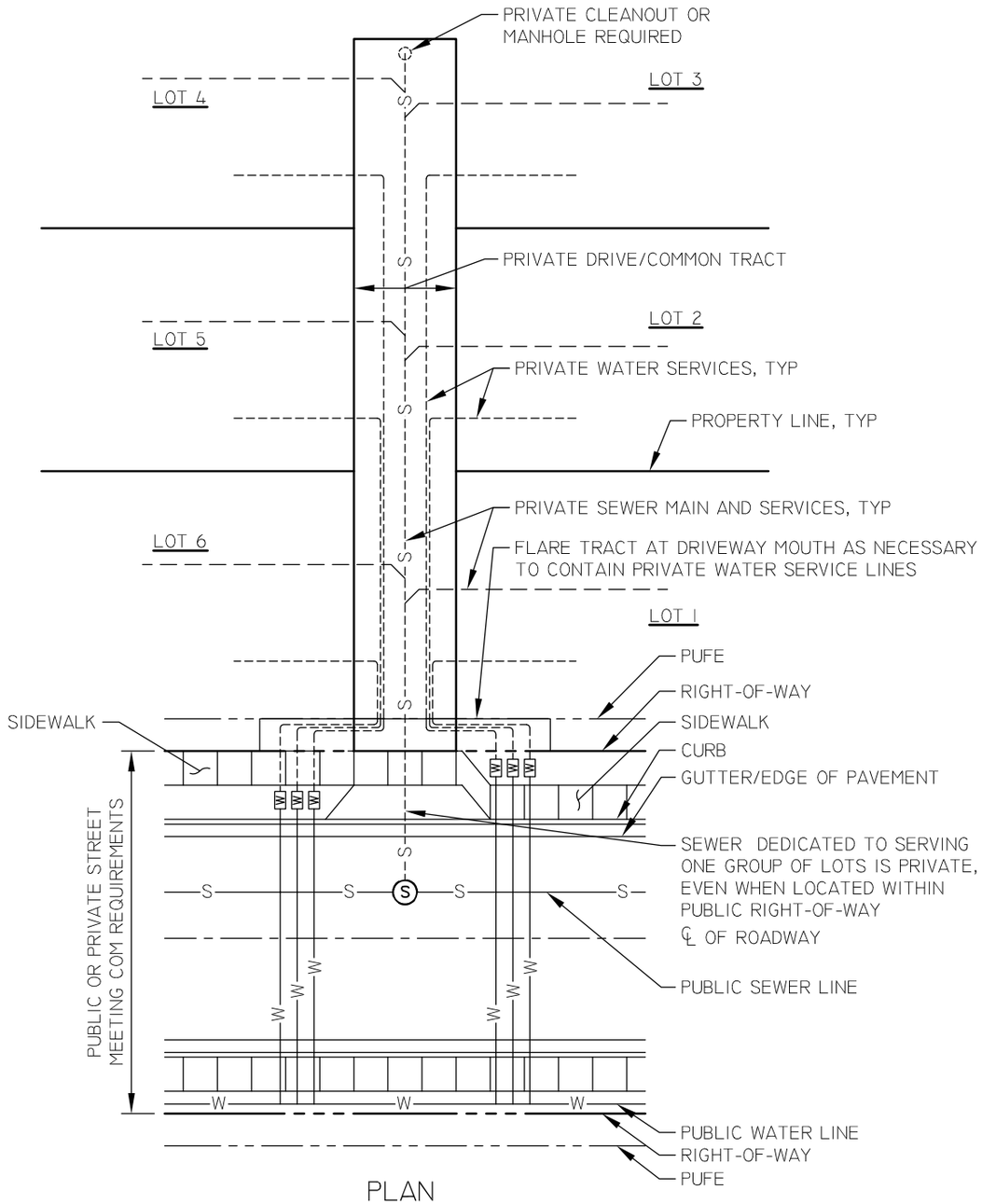

PLAN

NOTES

1. THIS DETAIL IS APPLICABLE TO "RESIDENTIAL SMALL LOT/MULTI-LOT PRIVATE DRIVEWAY" DEVELOPMENTS, WHICH (BY DEFINITION) INCORPORATE A DEVELOPMENT PATTERN WITH SINGLE FAMILY DETACHED HOME LOTS FOCUSED AROUND A SHARED OR COMMON ACCESS DRIVE BETWEEN THE LOTS. THESE LOTS TYPICALLY SHARE ONE POINT OF ACCESS TO THE FRONTING STREET.
2. WHILE THIS DETAIL SHOWS SIX LOTS IN ONE GROUPING AROUND A COMMON DRIVE, OTHER DESIGN GROUPINGS AND NUMBERS OF LOTS WITHIN ONE GROUPING ARE POSSIBLE.
3. THE WATER MAIN, WATER SERVICES BETWEEN THE MAIN AND THE METER, AND THE WATER METERS SHALL BE LOCATED IN PUBLIC RIGHT-OF-WAY OR WITHIN THE PRIVATE STREET FRONTING THE GROUPING. THE METER AND SERVICE LINES BETWEEN THE PUBLIC MAIN AND THE METER SHALL BE PUBLIC. THE SERVICE LINES ON THE HOUSE SIDE OF THE METER SHALL BE PRIVATE.
4. THE PRIVATE WATER SERVICE LINES SHALL BE LOCATED IN COMMON TRACTS DEEDED TO THE HOMEOWNER'S ASSOCIATION (HOA) FOR COMMON PURPOSES FROM THE METER UNTIL SUCH POINT AS THE SERVICE ENTERS AN INDIVIDUAL LOT.
5. WATER SERVICE LINES SHALL HAVE A MINIMUM HORIZONTAL SEPARATION OF 3 FEET AT THE CONNECTION TO THE MAIN AND 6 INCHES AT ALL OTHER LOCATIONS. WATER SERVICE LINES SHALL BE INSTALLED INSURING THAT THEY DO NOT CROSS EACH OTHER.
6. WATER SERVICE LINES IN COMMON TRACTS SHALL HAVE AN IDENTIFIER INDICATING WHICH LOT IT SERVES. THE IDENTIFIER SHALL BE AN UNDERGROUND WARNING TAPE BURIED 6-INCHES ABOVE THE SERVICE. THE TAPE SHALL BE IMPRINTED WITH CONTRASTING TEXT THAT IDENTIFIES THE LOT BEING SERVED AT A MAXIMUM SPACING OF SIX FEET ALONG THE SERVICE ALIGNMENT.
7. TO MINIMIZE CONGESTION, EQUAL NUMBERS OF WATER METERS SHOULD BE PLACED ON EACH SIDE OF A SHARED DRIVEWAY.
8. THE SEWER FACILITIES DEDICATED TO SERVING ONE GROUP OF LOTS (INCLUDING MAINS & SERVICES OR PORTIONS THEREOF LOCATED IN THE STREET FRONTING THE CLUSTER) SHALL BE PRIVATE.
9. THE PRIVATE SEWER MAIN AND PRIVATE SEWER SERVICES LOCATED OUTSIDE OF RIGHT-OF-WAY SHALL BE LOCATED IN COMMON TRACTS DEEDED TO THE HOA FOR COMMON PURPOSES UNTIL SUCH POINT AS THE SERVICE ENTERS AN INDIVIDUAL LOT. SEWER LINES SHALL NOT BE PERMITTED TO CROSS ADJACENT LOTS EVEN IF A PUBLIC UTILITY EASEMENT EXISTS ON THAT LOT.
10. THE CC&R'S SHALL REQUIRE THE HOMEOWNER'S ASSOCIATION TO BE RESPONSIBLE FOR THE MAINTENANCE AND REPAIR OF PRIVATE WATER SERVICE LINES, PRIVATE SEWER MAINS AND PRIVATE SEWER SERVICES, EXCEPTING ONLY THE SEGMENTS THEREOF LOCATED ON PRIVATE LOTS.
11. FOR DETACHED SIDEWALK LOCATIONS, PLACE WATER METERS BETWEEN THE BACK OF CURB AND SIDEWALK. FOR ATTACHED SIDEWALK LOCATIONS, PLACE WATER METERS BETWEEN THE BACK OF SIDEWALK AND THE RIGHT-OF-WAY LINE. CENTER-TO-CENTER SPACING BETWEEN THE METER BOXES SHALL BE 3-FEET MINIMUM. ALSO, MAINTAIN A MINIMUM OF 6-INCHES CLEARANCE BETWEEN THE NEAREST EDGE OF THE METER BOX AND THE BACK OF CURB, EDGE OF SIDEWALK AND PROPERTY LINE.
12. ALL OTHER REQUIREMENTS FOR PRIVATE WATER AND SEWER SERVICE SHALL ADHERE TO THE LATEST ADOPTED UNIFORM PLUMBING CODE AS AMENDED BY THE CITY.

NOT TO SCALE

mesa·az

WATER & SEWER SERVICE STANDARDS FOR RESIDENTIAL SMALL LOT / MULTI-LOT PRIVATE DRIVE DEVELOPMENTS

DETAIL NO. M-53

REV. 09/09/14

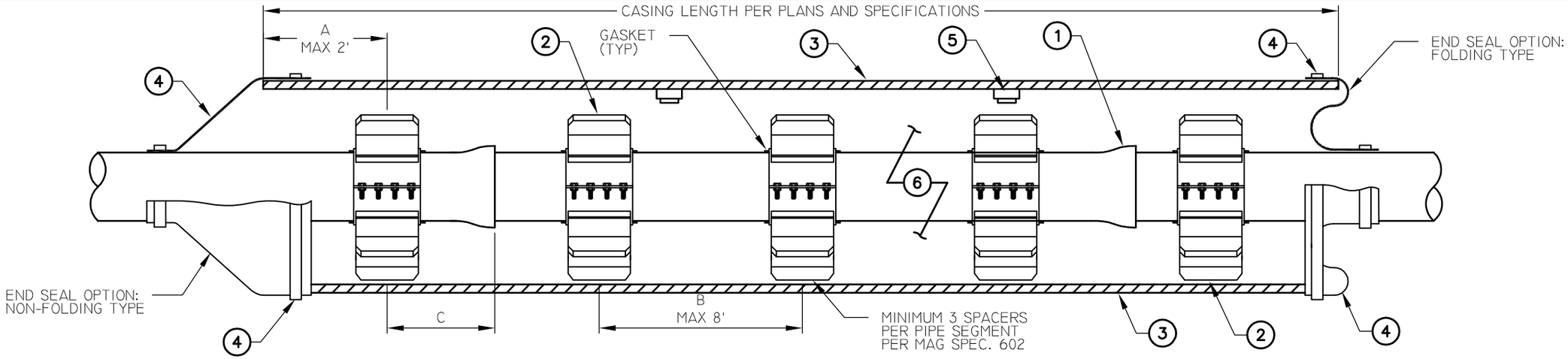

CASING INSTALLATION PROFILE VIEW

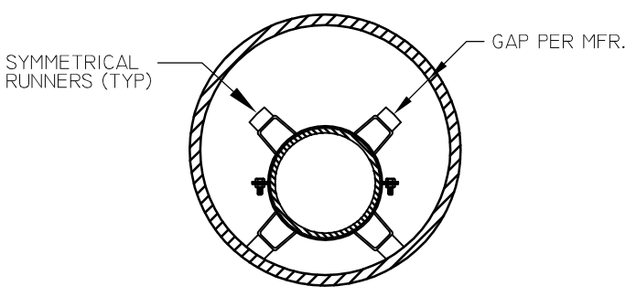

SECTION VIEW
STANDARD POSITION

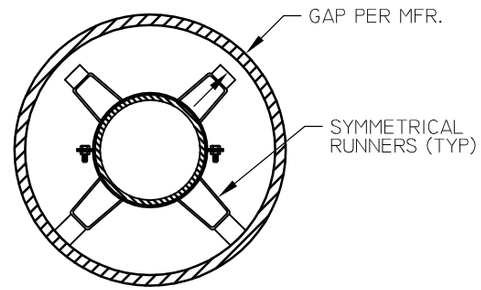

SECTION VIEW
CENTERED POSITION

INSTALLATION NOTES:

1. RESTRAINED JOINT CARRIER PIPE PER CITY OF MESA APPROVED PRODUCTS LIST.
2. STAINLESS STEEL CASING SPACERS PER CITY OF MESA APPROVED PRODUCTS LIST. INSTALL THREE PER PIPE MINIMUM.
3. STEEL CASING LENGTH, DIAMETER, MATERIAL, AND FABRICATION SHALL BE PER MAG SPECIFICATION SECTION 602 AND APPROVED PROJECT PLANS AND SPECIFICATIONS.
4. CASING END SEAL WITH STAINLESS STEEL RETAINING BANDS PER CITY OF MESA APPROVED PRODUCTS LIST.
5. STEEL CASING 37" I.D. OR LARGER SHALL BE INSTALLED WITH GROUT CONNECTIONS. GROUT CONNECTIONS AND GROUTING SHALL BE PER MAG SPECIFICATION 602.
6. ANNULAR SPACE BETWEEN CASING AND CARRIER PIPE SHALL BE LEFT EMPTY PER MAG SPEC. 602, UNLESS OTHERWISE INDICATED IN PROJECT PLANS AND SPECIFICATIONS.

DIMENSION NOTES:

A. CASING END TO SPACER DISTANCE SHALL BE PER MANUFACTURER RECOMMENDATION, MAXIMUM 2'.
B. SPACER SEPARATION DISTANCE SHALL BE PER MANUFACTURER RECOMMENDATION. THE MAXIMUM SEPARATION DISTANCE SHALL BE 8', AND A MINIMUM NUMBER OF THREE SPACERS SHALL BE INSTALLED PER PIPE SEGMENT PER MAG SPECIFICATION SECTION 602.
C. JOINT TO SPACER DISTANCE PER MANUFACTURER RECOMMENDATION.

GENERAL NOTES:

- THE INTENT OF THIS DETAIL IS TO PROVIDE GUIDANCE FOR GENERAL CASING INSTALLATION FOR DUCTILE IRON PIPE WATER MAINS AND IS NOT INTENDED TO COVER CONCRETE CYLINDER PIPE OR INSTALLATIONS WITH SPECIAL REQUIREMENTS SUCH AS GAS MAINS, LIGHT RAIL, ETC.
- CATHODIC PROTECTION REQUIREMENTS SHALL BE PER APPROVED PROJECT PLANS AND SPECIFICATIONS.
- CASING THICKNESS AND DESIGN SHALL BE PER MAG SPECIFICATION SECTION 602, MANUFACTURERS RECOMMENDATION, AND PROJECT PLANS AND SPECIFICATIONS.
- RESTRAINED LENGTH IN CASINGS SHALL NOT BE CONSIDERED AS PART OF THE RESTRAINT LENGTH FOR THRUST CALCULATION PURPOSES.
- ACCEPTABLE CARRIER PIPE INSTALLATION POSITIONS ARE STANDARD AND CENTERED, AS SHOWN ABOVE..
- CARE MUST BE EXERCISED TO AVOID METAL TO METAL CONTACT BETWEEN THE CARRIER AND CASING PIPE.
- INSTALLATION SHALL CONFORM TO AWWA M41.

NOT TO SCALE

mesa·az

STEEL CASING PIPE INSTALLATION DETAIL FOR WATER MAINS

DETAIL NO. M-55

REV. 02/11/2015

NOTES

1. GAS PIPE SHALL HAVE A MINIMUM OF 36" COVER AS MEASURED FROM WHICHEVER IS LOWER, FINISHED GRADE OF PAVEMENT OR NATURAL GROUND, UNLESS OTHERWISE NOTED. "BLUE TOPS" MAY BE REQUESTED TO VERIFY COVER AS REQUIRED PER NOTE 1 OF COM DETAIL M-49.1.

2. AFTER THE WATER MAIN HAS BEEN INSTALLED, THE WATER LINE CONTRACTOR SHALL INSTALL SHADING MATERIAL TO PROVIDE A LEVEL UNIFORM BEARING SURFACE FOR THE INSTALLATION OF THE GAS PIPE. THE CITY OF MESA OR ITS GAS LINE CONTRACTOR WILL FURNISH AND INSTALL THE GAS PIPE AND TRACER WIRE AFTER THE WATER MAIN HAS BEEN INSTALLED.

3. SHADING MATERIAL ADJACENT TO THE CITY OF MESA GAS PIPE SHALL BE SELECT SANDY TYPE SOIL FREE OF ROCKS OR DEBRIS THAT WILL PASS THROUGH A 3/8" SCREEN AS INSPECTED AND APPROVED BY CITY OF MESA GAS INSPECTION PERSONNEL. UNLESS OTHERWISE APPROVED BY THE THE CITY OF MESA, THE CITY OF MESA OR ITS GAS LINE CONTRACTOR SHALL FURNISH ALL SHADING MATERIAL AND INSTALL THE SHADING MATERIAL FROM THE BOTTOM OF THE GAS PIPE TO 6" ABOVE THE TOP OF THE GAS PIPE.

4. SEE CONSTRUCTION PLANS FOR WATER MAIN AND GAS PIPE SIZES.

5. WHERE WATER AND GAS ARE INSTALLED IN A JOINT TRENCH, THE WATER LINE CONTRACTOR SHALL ADJUST BOTH WATER AND GAS VALVE HOUSING BOXES TO FINISHED GRADE ACCORDING TO THE APPLICABLE STANDARD DETAIL. ALSO, THE WATER LINE CONTRACTOR SHALL FURNISH, INSTALL, AND MAINTAIN ALL NECESSARY BARRICADING, STEEL PLATING AND TRENCH SHORING REQUIRED DURING GAS INSTALLATION.

6. THE WATER LINE CONTRACTOR SHALL COMPLETE ALL BACKFILL TO FINISHED GRADE AFTER THE GAS PIPE INSTALLATION IS COMPLETED.

7. A MINIMUM OF 12" OF SEPARATION SHALL BE MAINTAINED BETWEEN GAS PIPE, WATER MAIN AND OTHER UNDERGROUND FACILITIES WHEN OVERCROSSING OR UNDERCROSSING.

8. CITY MAY SPECIFY TRENCH DETAIL TO BE USED. IF NOT, THE WATER LINE CONTRACTOR HAS THE OPTION OF INSTALLING TRENCH DETAIL 'A' OR 'B', UNLESS OTHERWISE NOTED. PREFERRED INSTALLATION IS TRENCH DETAIL 'A'.

9. ALL WATER MAINS IN MAJOR STREETS SHALL HAVE A MINIMUM COVER OF 48-INCHES OVER THE TOP OF THE PIPE. WATER MAINS IN OTHER LOCATIONS SHALL HAVE A MINIMUM COVER OVER THE TOP OF THE PIPE AS FOLLOWS:

(A) 36-INCHES FOR MAINS SMALLER THAN 12-INCHES

(B) 48-INCHES FOR MAINS 12-INCH AND LARGER.

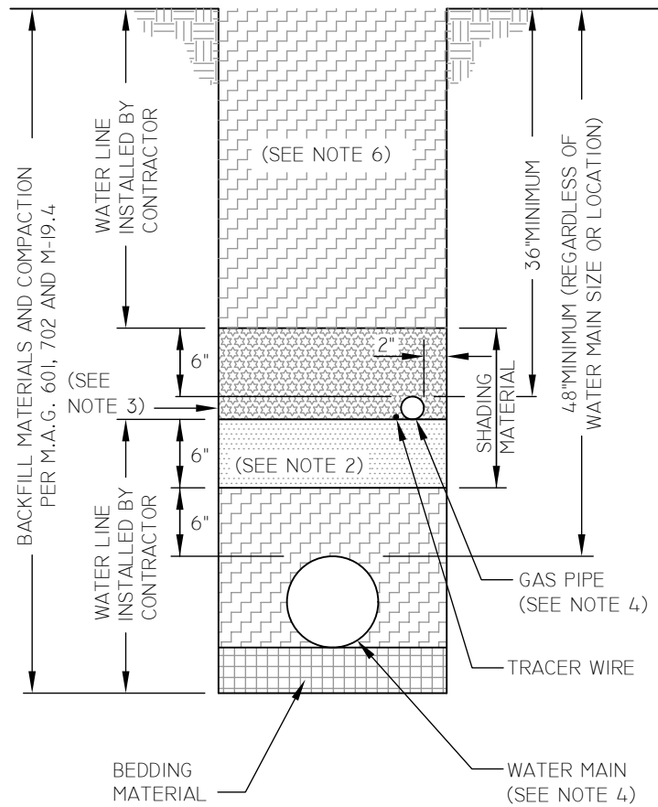

TRENCH DETAIL 'A'

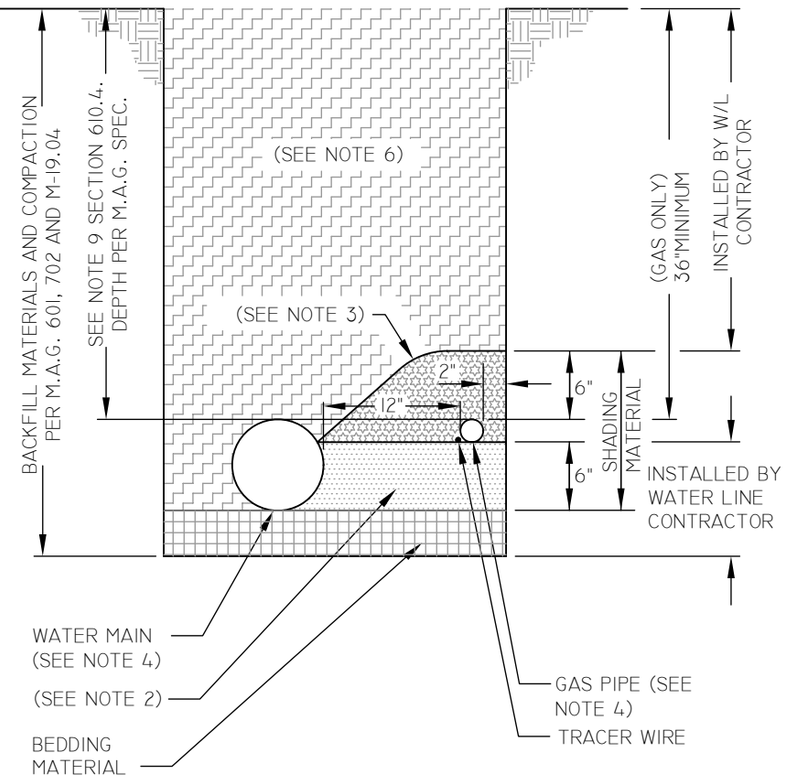

TRENCH DETAIL 'B'

LEGEND

INSTALLED BY THE CITY OR ITS GAS LINE CONTRACTOR

NOT TO SCALE

mesa·az

JOINT USE WATER AND GAS TRENCH DETAIL

DETAIL NO. M-58

REV. 02/24/2015

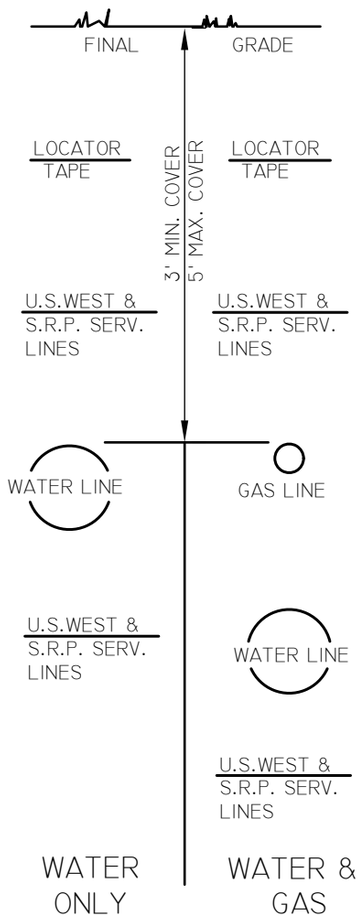

FIG. 1

NOTES

1. IF THE CITY OF MESA'S FACILITIES HAVE LESS THAN THREE (3) FEET OF COVER, NON-CITY PUBLIC UTILITY COMPANIES WILL INSTALL THEIR FACILITIES UNDER THE CITY OF MESA'S FACILITIES.
2. IF THE CITY OF MESA'S FACILITIES HAVE THREE (3) FEET TO FIVE (5) FEET OF COVER, NON-CITY PUBLIC UTILITY COMPANIES MAY INSTALL THEIR SERVICE LINES (SECONDARY) AND CABLES ABOVE MESA'S FACILITIES. IN THIS SITUATION NON-CITY PUBLIC UTILITY COMPANIES SHALL INSTALL THEIR TRUNK LINES (PRIMARY) UNDER MESA'S FACILITIES. SEE FIG. 1.
3. IF THE CITY OF MESA'S FACILITIES HAVE FIVE (5) FEET OF COVER OR MORE, NON-CITY PUBLIC UTILITY COMPANIES SHALL INSTALL BOTH SERVICE LINES & TRUNK LINES ABOVE MESA'S FACILITIES. SEE FIG. 2.
4. IN CERTAIN SITUATIONS THE CITY OF MESA HAS FACILITIES THAT ARE PARALLEL BUT SEPARATED BY SOME HORIZONTAL DISTANCE. IT IS POSSIBLE THAT MESA'S FACILITIES WOULD BE AT DIFFERENT DEPTHS THEREBY ALLOWING NON-CITY PUBLIC UTILITIES TO PASS UNDER ONE FACILITY, OVER ANOTHER, AND STILL COMPLY WITH THE ABOVE NOTES. IF THE HORIZONTAL SEPARATION BETWEEN MESA'S FACILITIES IS THREE (3) FEET OR LESS AND THE NOTES REQUIRE THAT NON-CITY PUBLIC UTILITIES PASS UNDER ONE OF MESA'S FACILITIES, THEY SHALL PASS UNDER BOTH OF MESA'S FACILITIES.
5. NON-CITY PUBLIC UTILITY COMPANIES WILL INSTALL MARKER TAPE MATERIAL FIVE (5) FEET EACH WAY OF A CROSSING (ONE FOOT ABOVE CABLES) WHEN ANY CABLE IS INSTALLED ABOVE THE CITY OF MESA'S FACILITIES.
6. NON-CITY PUBLIC UTILITY COMPANIES SHALL INSTALL BURIED CONDUIT AND/OR CABLE AT SUFFICIENT DEPTH SO AS TO PROVIDE AT LEAST TWELVE (12) INCHES OF VERTICAL CLEARANCE WHETHER ABOVE OR BELOW WATER AND GAS LINES. A TWENTY-FOUR (24) INCH HORIZONTAL SEPARATION SHALL BE MAINTAINED FROM EXISTING OR PROPOSED WATER AND GAS LINES, PURSUANT TO THIS DETAIL.
7. FIGURES 1 AND 2 APPLY ONLY TO CROSSINGS AND NOT TO PARALLEL INSTALLATIONS.

* NON-CITY OF MESA PRIVATE UTILITY COMPANIES SHALL INSTALL THEIR FACILITIES AS DIRECTED BY THE CITY ENGINEER AND PER THE SPECIAL CONDITIONS OF THE PERMIT.

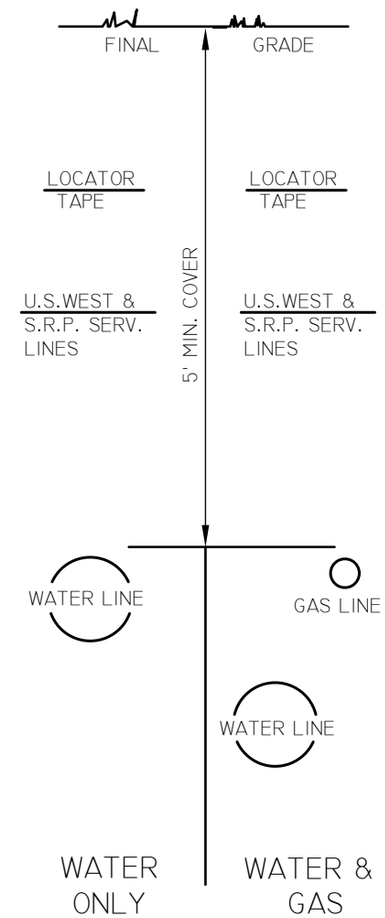

FIG. 2

NOT TO SCALE

mesa·az

TYPICAL UTILITY CROSSINGS

DETAIL NO. M-60

REV. 02/24/2015

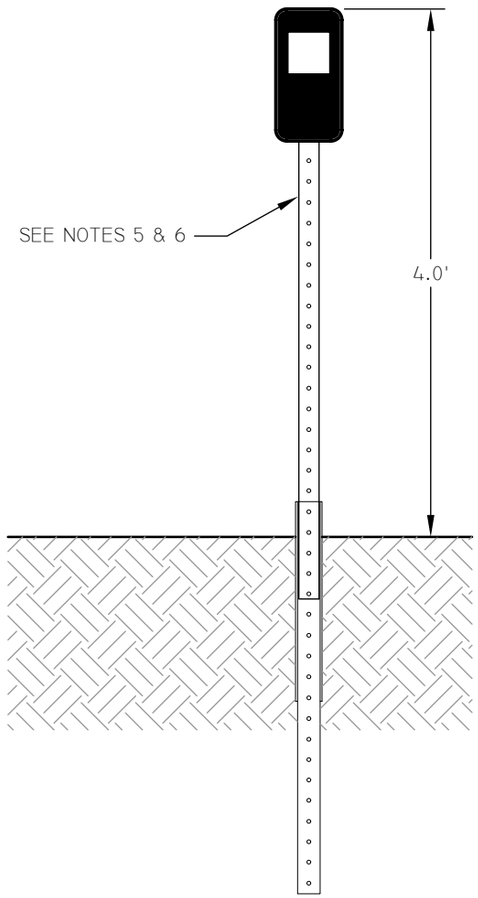

NOTES

1. PANEL SHALL BE FABRICATED FROM 0.063" THICK 3004-H14, 5052-H-38, OR 6061-T6 ALUMINUM ALLOY ETCHED ON BOTH SIDES.
2. CORNERS OF PANEL SHALL BE ROUNDED WITH A 1-INCH RADIUS.
3. PANEL BACKGROUND SHALL BE BLACK.
4. DELINEATOR MARKING SHALL BE A 4" x 4" WHITE HIGHLY REFLECTIVE MARKING.
5. SIGN SHALL BE LOCATED PER COM DETAIL M-23.01.
6. POST SHALL BE INSTALLED PER COM DETAIL M-39.

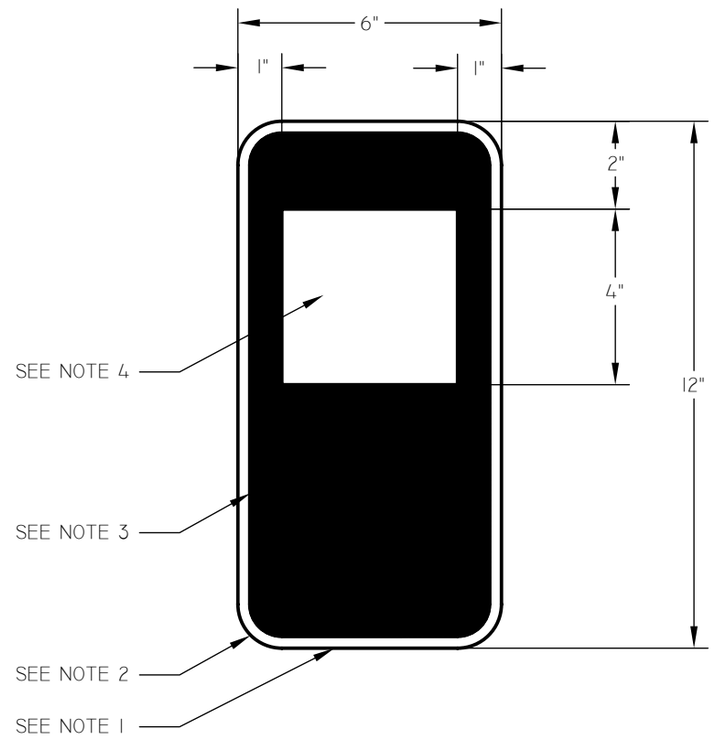

NOT TO SCALE

DELINEATOR

DETAIL NO. M-61

REV. 02/24/2015

PLEASE NOTE
SOLID WASTE VEHICLES WEIGH APPROX. 29 TONS WHEN FULL. DRIVEWAYS MUST BE BUILT TO SUPPORT THIS WEIGHT WITHOUT DAMAGE TO DRIVE.

HAMMER HEAD DRIVE

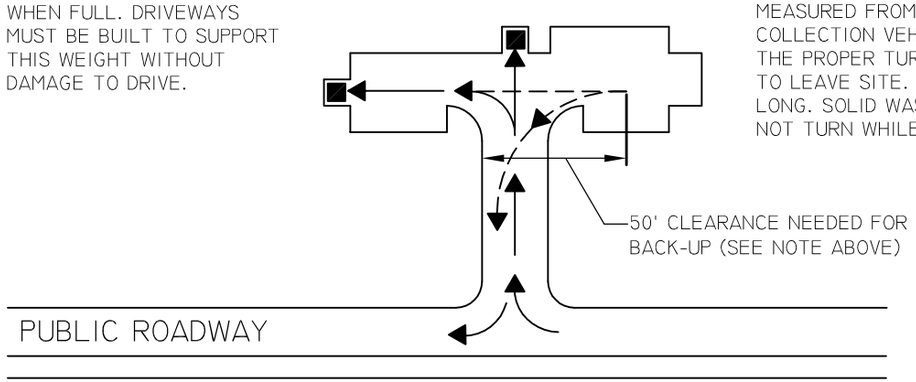

SAFETY NOTE
BACKING UP MORE THAN 50' AFTER SERVICE TO A SOLID WASTE BIN IS PROHIBITED. THE 50' IS MEASURED FROM THE BACK OF THE SOLID WASTE COLLECTION VEHICLE. MAKE SURE THE AREA HAS THE PROPER TURNING RADIUS AND ACCESS AREA TO LEAVE SITE. THE VEHICLE IS APPROX. 37' LONG. SOLID WASTE COLLECTION VEHICLES WILL NOT TURN WHILE BACKING.

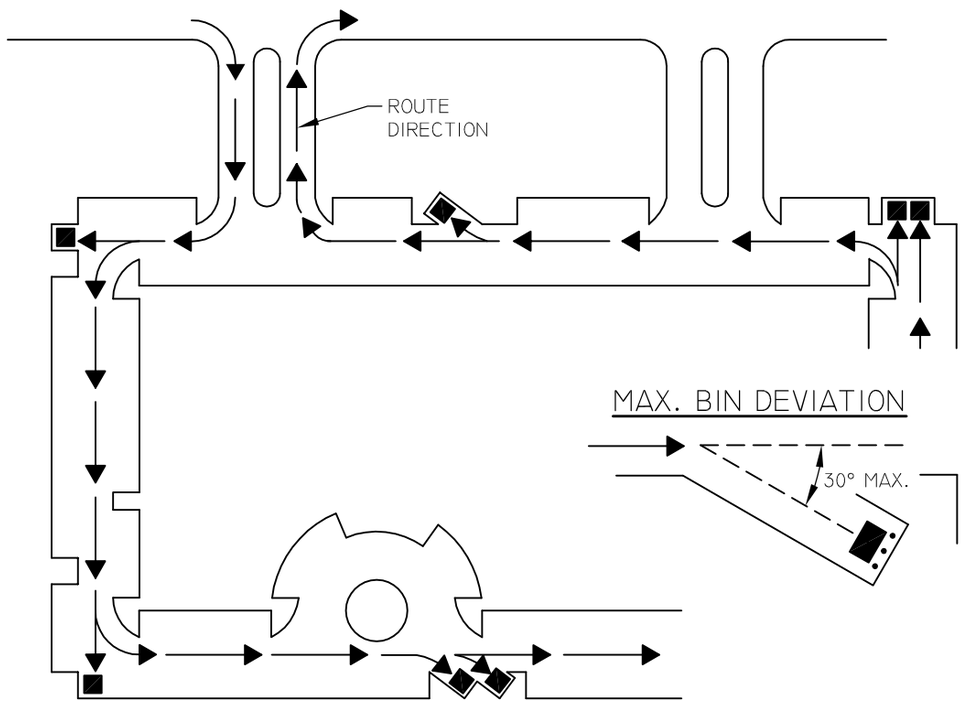

A TYPICAL SOLID WASTE COLLECTION ROUTE

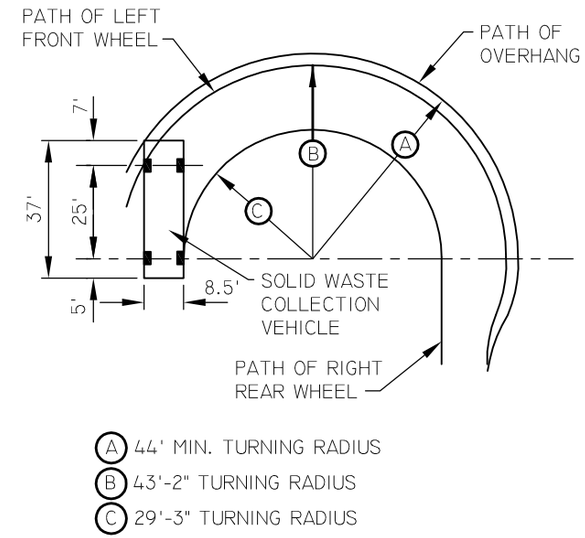

CLEARANCE REQUIREMENTS

NOTES

1. ALL CURBS ARE TO BE ALIGNED ON THE OUTSIDE OF ENCLOSURE WALLS. THE CURBS SHALL NOT INTERFERE WITH THE ROUTE OF THE SOLID WASTE COLLECTION VEHICLE.
2. IN GENERAL TERMS, ALL SOLID WASTE COLLECTION ROUTES SHALL MEET ENGINEERING DESIGN CRITERIA (STREET WIDTHS, TURNING RADII) IN A MANNER THAT ALLOWS SOLID WASTE COLLECTION VEHICLES ACCESS TO BIN ENCLOSURES. SITES SHALL BE DESIGNED SO COLLECTION VEHICLES CAN SAFELY ACCESS AND LIFT A BIN WITHOUT OBSTRUCTIONS (GROUND LEVEL AND AERIAL OBSTRUCTIONS).
3. FOR THE SAFETY OF OTHERS, SOLID WASTE COLLECTION VEHICLES WILL NOT BACK UP MORE THAN 50 FEET AFTER SERVICING A BIN AND WILL NOT MAKE ANY TURNS WHILE BACKING.
4. NO AWNINGS OR BUILDING PROJECTIONS ALLOWED IN SOLID WASTE COLLECTION VEHICLE ROUTES. MIN. OVERHEAD CLEARANCE OF 14' IS REQUIRED IN DRIVE AND 25' OVER BIN ENCLOSURE AREA FROM STEEL SAFETY POSTS BACK 50'.
5. ROUTES SHALL BE CLEAR OF ALL OBSTRUCTIONS (CURBS, WALLS, OVERHEAD WIRES, AND AWNINGS) TO PREVENT DAMAGE FROM THE COLLECTION VEHICLE.
6. TAKE NOTE OF THE SOLID WASTE COLLECTION ROUTE. THE COLLECTION VEHICLE SHALL TRAVEL THROUGH A SITE ONCE WITHOUT BACKTRACKING.
7. BIN ENCLOSURES ARE TO BE ANGLED NO MORE THAN 30 DEGREES FROM THE CENTER LINE OF THE SOLID WASTE COLLECTION VEHICLE ROUTE.
8. BIN ENCLOSURES SHALL BE LOCATED AWAY FROM ENTRANCES AND EXITS OR BUSINESS DRIVE-THRU'S SO SOLID WASTE COLLECTION VEHICLE DOES NOT CREATE A SAFETY HAZARD BY BLOCKING IN-COMING OR OUT-GOING TRAFFIC.
9. STANDARDS FOR SINGLE, DOUBLE, AND TRIPLE-WIDE BIN ENCLOSURES ARE ADDRESSED IN COM DETAILS M-62.02 AND M-62.03.
10. STANDARDS FOR BIN ENCLOSURE SCREEN WALLS, SAFETY POSTS, AND GATES ARE ADDRESSED IN COM DETAIL M-62.04.

NOT TO SCALE

mesa·az

STANDARDS FOR SOLID WASTE VEHICLE ACCESS

DETAIL NO.
M-62.01

REV. 12/23/14

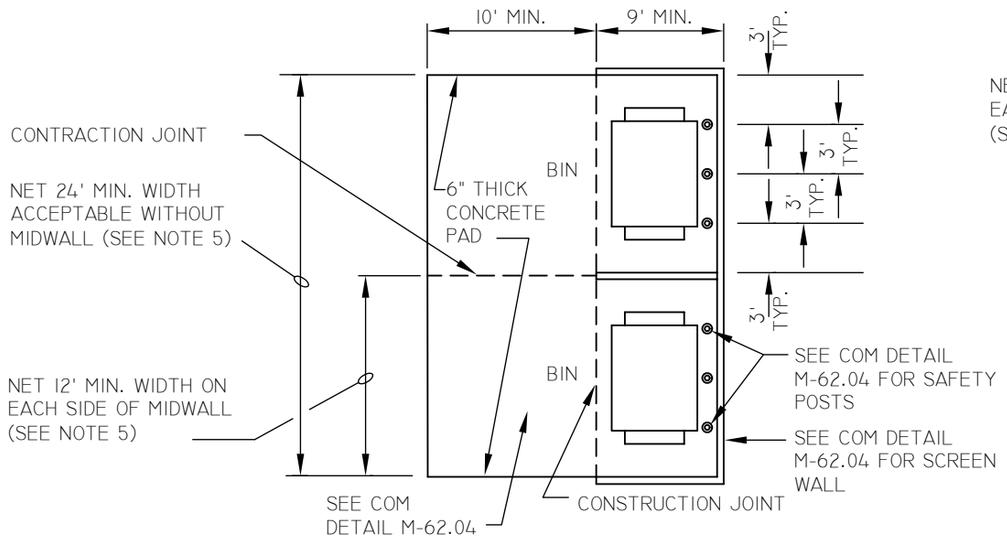

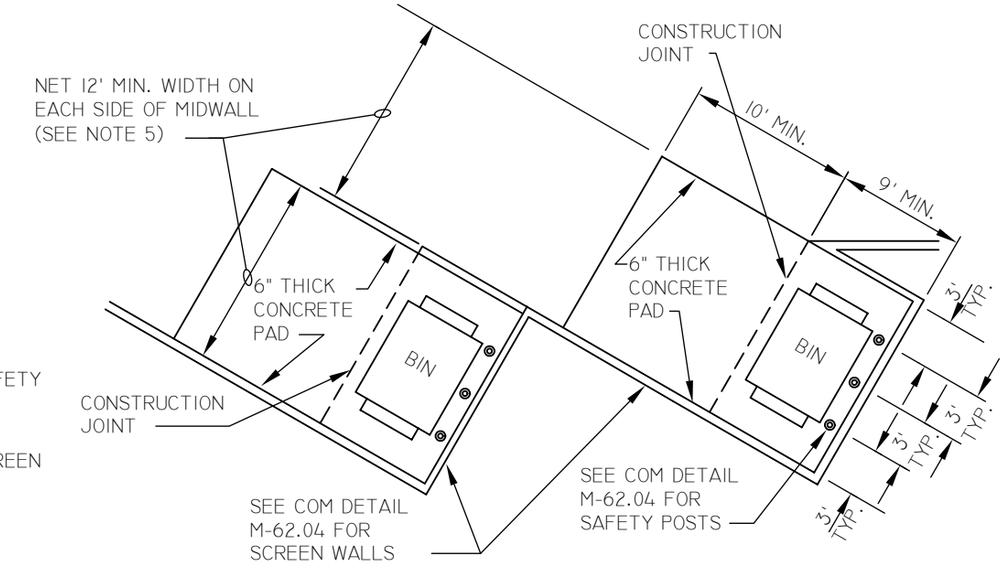

DOUBLE-WIDE BIN ENCLOSURE CONFIGURATIONS

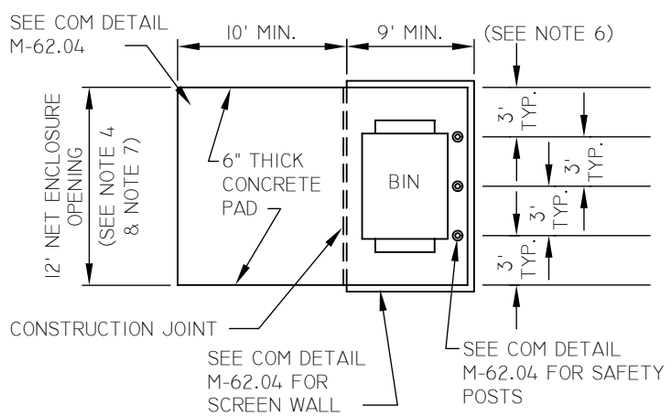

SINGLE-WIDE BIN ENCLOSURE CONFIGURATION

MAX. BIN DEVIATION

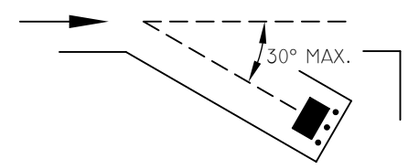

SEE M-62.02.2 FOR REFERENCED NOTES

NOT TO SCALE

mesa·az

SINGLE AND DOUBLE-WIDE BIN ENCLOSURES

DETAIL NO. M-62.02.1

REV. 1/31/14

NOTES

1. ALL COMMERCIAL PROPERTIES SHALL BE DESIGNED WITH ENCLOSURES TO ACCOMMODATE (1) REFUSE AND (1) RECYCLING ENCLOSURE FOR EVERY 20,000 SQUARE FEET OF BUILDING SPACE. RESTAURANTS WHICH ARE DESIGNED ON A SINGLE PAD SHALL HAVE A MINIMUM (1) REFUSE AND (1) RECYCLING ENCLOSURE. THE ENCLOSURES CAN BE SET UP AS DOUBLES OR SINGLES TO MAXIMIZE THE USE OF THE PROPERTY.

2. MULTI-UNIT RESIDENTIAL DEVELOPMENTS SHALL BE DESIGNED WITH EITHER SINGLE OR DOUBLE-WIDE ENCLOSURES FOR TRASH AND AT LEAST ONE TRIPLE-WIDE ENCLOSURE FOR RECYCLING.

3. COMPACTORS CAN BE USED IN DEVELOPMENTS WHERE THE EMPLOYEES LOAD AND ACTIVATE THE COMPACTING EQUIPMENT. DEVELOPMENTS THAT ALLOW CUSTOMERS OR RESIDENTS ACCESS TO THE COMPACTING EQUIPMENT WILL NOT BE APPROVED. MARICOPA COUNTY REGULATIONS (MARICOPA COUNTY ENVIRONMENTAL HEALTH CODE CHAPTER 2, SECTION 5, REGULATION 4 (A)) REQUIRE TWICE PER WEEK COLLECTION IF FOOD WASTE IS PLACED INTO CONTAINERS.

4. THE NUMBER OF BIN ENCLOSURES NEEDED DEPENDS ON THE SIZE OF THE DEVELOPMENT. TYPICALLY, TOTAL VOLUME NEEDS CAN BE CALCULATED BASED ON ONE HALF-CUBIC YARD PER LIVING UNIT PER WEEK. FOR EXAMPLE, A DEVELOPMENT WITH 240 UNITS X .5 YARDS = 120 YARDS PER WEEK OR 10 TRASH BINS (6 YARD) SERVICED TWO TIMES PER WEEK (10 X 6 X 2 = 120 YARDS).

5. SINGLE-WIDE BIN ENCLOSURES SHALL HAVE A NET ENCLOSURE OPENING OF 12 FEET.

6. DOUBLE-WIDE BIN ENCLOSURES SHALL HAVE A NET ENCLOSURE OPENING OF 24 FEET WITHOUT MIDWALLS. ALTHOUGH NOT PREFERRED, DOUBLE WIDE BIN ENCLOSURES CAN BE DESIGNED WITH MIDWALLS WITH A NET ENCLOSURE OPENING OF 12 FEET ON EACH SIDE OF MIDWALL.

7. GATES, HINGES, SAFETY POSTS, & MOUNTING HARDWARE SHALL BE INSTALLED SO THERE IS A MIN. 9 FOOT DEPTH CREATED WITHIN EACH ENCLOSURE.

8. GATES, HINGES AND MOUNTING HARDWARE SHALL NOT INTRUDE UPON MINIMUM NET ENCLOSURE OPENING SO THERE IS A MINIMUM 12' WIDTH WITHIN EACH ENCLOSURE. DOUBLE ENCLOSURE GATES MUST BE ABLE TO OPEN SIMULTANEOUSLY.

9. BIN ENCLOSURES ARE TO BE ANGLED NO MORE THAN 30 DEGREES FROM THE CENTER LINE OF THE SOLID WASTE COLLECTION VEHICLE ROUTE.

10. BINS THAT ARE VISIBLE FROM A PUBLIC ROADWAY SHALL HAVE ENCLOSURE GATES THAT SCREEN THE BINS FROM PUBLIC VIEW.

11. BIN ENCLOSURES TO BE A MINIMUM OF 3 FEET FROM ANY NON-COMBUSTIBLE PLANNED OR EXISTING STRUCTURE AT ITS CLOSEST POINT; 5 FEET FROM ANY COMBUSTIBLE PLANNED OR EXISTING STRUCTURE AT ITS CLOSEST POINT (PER UNIFORM FIRE CODE 1103.2.2).

12. STANDARDS FOR SOLID WASTE VEHICLE ACCESS ARE ADDRESSED IN COM DETAIL M-62.01.

13. STANDARDS FOR TRIPLE WIDE ENCLOSURES ARE ADDRESSED IN COM DETAIL M-62.03.

14. STANDARDS FOR BIN ENCLOSURE SCREEN WALLS, SAFETY POSTS, AND GATES ARE ADDRESSED IN COM DETAIL M-62.04.

15. STANDARDS FOR PROPERTIES APPROVED FOR BARREL SERVICE ARE ADDRESSED IN COM DETAIL M-62.05.

16. RESTAURANTS MUST PROVIDE A SEPARATE ENCLOSED AREA TO ACCOMODATE THEIR GREASE TRAP. THIS DESIGNATED AREA MUST NOT INTERFERE WITH THE TRASH/RECYCLING COLLECTION.

17. SOLID WASTE ENCLOSURES MAY INCLUDE WATER CONNECTIONS & DRAINS TO FACILITATE CLEANING OF DUMPSTERS. THESE SHOULD BE LOCATED TO NOT IMPEDE THE ENCLOSURE OPENING (AND GATING IF REQUIRED). ADDITIONAL ITEMS SUCH AS LANDSCAPING CONTROL BOXES AND LIGHTING MAY BE POSITIONED ON THE OUTSIDE OF THE ENCLOSURE WALLS.

18. TREE PLANTING SHOULD NOT TAKE PLACE WITHIN TEN (10) FEET OF THE BIN ENCLOSURE AND SHOULD BE SPACED SO AS NOT TO CREATE AN AERIAL OBSTRUCTION FOR THE BIN DUMPING AT THE FINAL FULL GROWTH DIMENSIONS.

mesa·az

SINGLE AND DOUBLE-WIDE BIN ENCLOSURES - NOTES

DETAIL NO.
M-62.02.2

REV. 02/10/2015

MAX. BIN DEVIATION

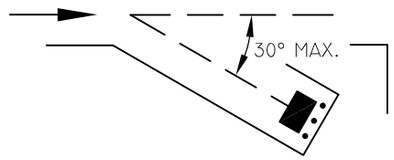

NOTES

1. MULTI-UNIT RESIDENTIAL DEVELOPMENTS MAY BE DESIGNED WITH A TRIPLE-WIDE ENCLOSURE TO ACCOMMODATE RECYCLING. ADDITIONAL ENCLOSURES MAY BE NECESSARY DEPENDING ON NUMBER OF UNITS. TOTAL VOLUME NEEDS ARE ADDRESSED IN COM DETAIL M-62.02.

2. TRIPLE-WIDE ENCLOSURES SHALL HAVE A NET ENCLOSURE OPENING OF 36 FEET AND SHALL BE DESIGNED WITHOUT MIDWALLS. GATES, HINGES, AND MOUNTING HARDWARE SHALL NOT INTRUDE UPON MINIMUM NET ENCLOSURE OPENING. GATES MUST BE ABLE TO OPEN SIMULTANEOUSLY.

3. GATES, HINGES, SAFETY POSTS, AND MOUNTING HARDWARE SHALL BE INSTALLED SO THERE IS A MINIMUM 9 FOOT DEPTH CREATED WITHIN EACH ENCLOSURE.

4. BIN ENCLOSURES ARE TO BE ANGLED NO MORE THAN 30 DEGREES FROM THE CENTER LINE OF THE SOLID WASTE COLLECTION VEHICLE ROUTE.

5. CONTRACTION JOINTS MAY BE EITHER SCORED OR SAWCUT 1-INCH DEEP.

6. GATES, HINGES AND MOUNTING HARDWARE SHALL NOT INTRUDE UPON MINIMUM NET ENCLOSURE OPENING SO THERE IS A MINIMUM 12' WIDTH CLEAR WITHIN EACH ENCLOSURE.

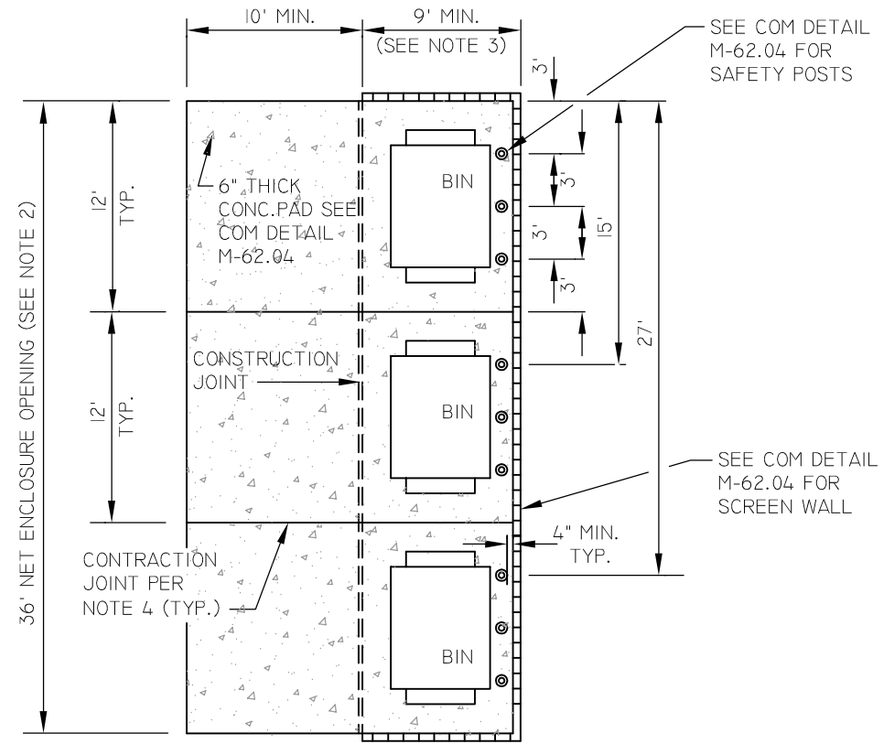

TRIPLE-WIDE BIN ENCLOSURE

NOT TO SCALE

mesa·az

TRIPLE-WIDE BIN ENCLOSURES

DETAIL NO. M-62.03

REV. 02/10/2015

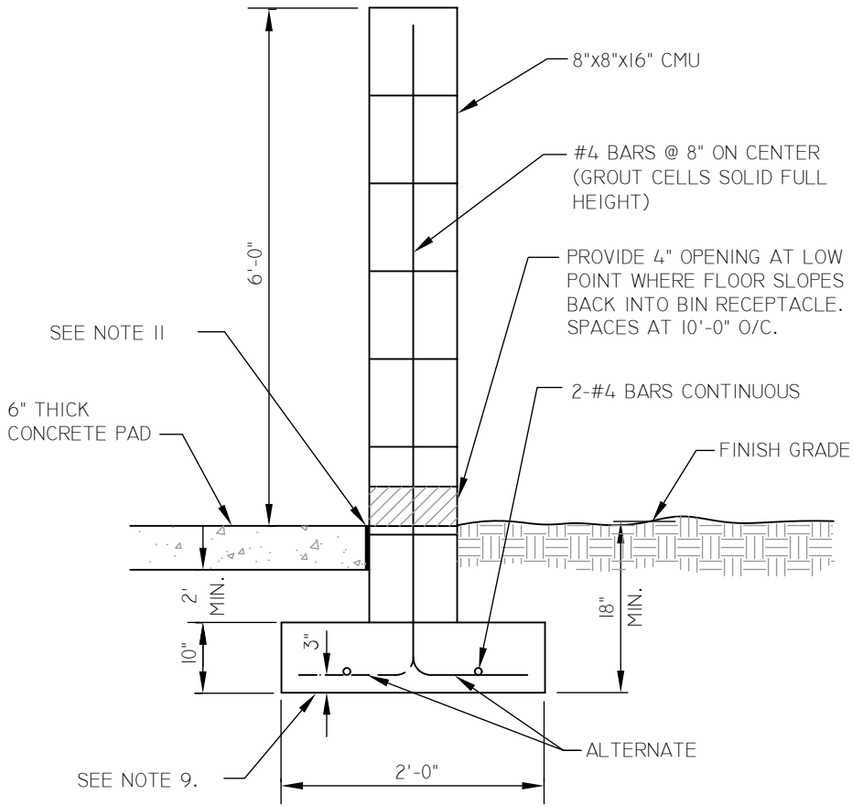

6-FOOT MASONRY SCREEN WALL

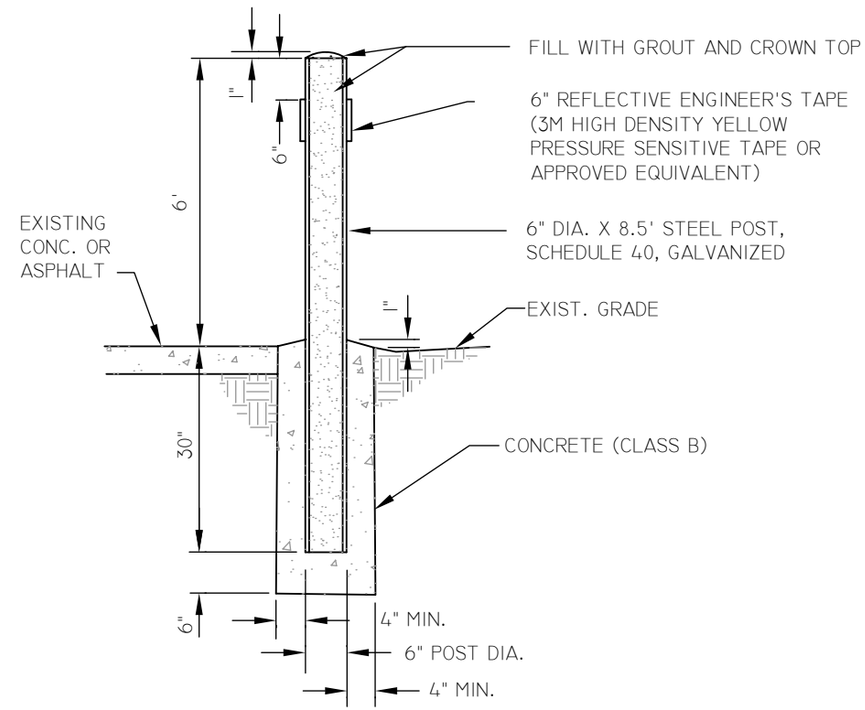

SAFETY POST

SEE M-62.04.2 FOR REFERENCED NOTES

NOT TO SCALE

mesa·az

BIN ENCLOSURE SCREEN WALL, SAFETY POST AND GATE STANDARDS

DETAIL NO.
M-62.04.1

REV. 01/31/14

NOTES

1. TRASH AND RECYCLING BIN AREA SHALL BE SCREENED WITH A SIX FOOT (6') MASONRY WALL PER COM DETAIL M-62.04.1.

2. BIN ENCLOSURE TO BE A MINIMUM OF 3 FEET FROM ANY NON-COMBUSTABLE PLANNED OR EXISTING STRUCTURE AT ITS CLOSEST POINT, AND 5 FEET FROM ANY COMBUSTABLE PLANNED OR EXISTING STRUCTURE AT ITS CLOSEST POINT (PER UNIFORM FIRE CODE 1103.2.2).

3. BINS THAT ARE VISIBLE FROM A PUBLIC ROADWAY SHALL HAVE ENCLOSURE GATES THAT SCREEN THE BINS FROM PUBLIC VIEW.

4. GATES SHALL BE INSTALLED SO THERE IS A NET BIN ENCLOSURE OPENING OF 12 FEET PER BIN. GATES, HINGES, AND MOUNTING HARDWARE SHALL NOT INTRUDE UPON MINIMUM NET ENCLOSURE OPENING.

5. GATES, HINGES, SAFETY POSTS, AND MOUNTING HARDWARE SHALL BE INSTALLED SO THERE IS A MINIMUM 9 FOOT DEPTH CREATED WITHIN EACH ENCLOSURE.

6. EACH ENCLOSURE GATE SHALL HAVE DROP PINS INSTALLED AND HOLES DRILLED IN THE CONCRETE AT BOTH THE OPEN AND CLOSED POSITIONS TO PREVENT GATES FROM CLOSING INTO THE COLLECTION VEHICLE.

7. BIN ENCLOSURES SHALL HAVE (3) 6" DIAMETER STEEL SAFETY POSTS INSTALLED IN THE BACK OF THE ENCLOSURE ONLY PER COM DETAIL M-62.04.1.

8. SAFETY POSTS SHALL HAVE A HEIGHT OF 6 FEET OR BE EQUAL TO THE HEIGHT OF THE BACK SCREEN WALL OF THE ENCLOSURE. SAFETY POSTS SHALL BE PLACED A MINIMUM OF 4" FROM THE WALL.

9. USE CLASS "A" CONCRETE AS PER SECTION 725 EXCEPT AS NOTED IN SAFETY POST DETAIL ON COM DETAIL M-62.04.1.

10. STEEL REINFORCEMENT SHALL BE GRADE 40.

11. EXPANSION JOINT FILLER SHALL BE 1/2" BITUMINOUS TYPE PREFORMED EXPANSION JOINT FILLER ASTM D-1751.

12. EXTERIOR FINISH OF 6 FOOT MASONRY SCREEN WALLS SHALL BE COORDINATED ARCHITECTURALLY WITH PRIMARY BUILDING FINISHES.

13. SOIL BELOW THE WALL FOOTER AND CONCRETE PAD SHALL BE COMPACTED TO A DEPTH OF 6 INCHES AND TO A MINIMUM DRY DENSITY OF 90% IN ACCORDANCE WITH ASTM D-2922 AND D-3017, AFTER ADJUSTMENT FOR ROCK CORRECTION.

14. STANDARDS FOR SOLID WASTE VEHICLE ACCESS ARE ADDRESSED IN COM DETAIL M-62.01.

15. STANDARDS FOR SINGLE, DOUBLE, AND TRIPLE-WIDE BIN ENCLOSURES ARE ADDRESSED IN COM DETAILS M-62.02 AND M-62.03.

SEE M-62.04.1 FOR REFERENCED NOTES

mesa·az

BIN ENCLOSURE SCREEN WALL SAFETY POST AND GATE STANDARDS - NOTES

DETAIL NO.
M-62.04.2

REV. 01/31/14

NOTES

1. BUSINESSES AND APARTMENTS THAT GENERATE A SMALL VOLUME OF REFUSE AND RECYCLABLES (TYPICALLY SMALL OFFICES, DUPLEXES, TRIPLEXES, AND FOURPLEXES) MAY REQUEST TO USE AUTOMATED BARREL SERVICE. PRIOR APPROVAL MUST BE MADE FROM THE SOLID WASTE DEPARTMENT. APPROVAL WILL BE BASED ON THE NEEDS OF THE BUSINESS OR APARTMENT AND CAPABILITY OF ROUTING THE STOP.

2. THE NUMBER OF BARRELS WILL BE DETERMINED BY:
   · BUSINESS - THE NUMBER OF OCCUPANTS AND THE SERVICES THEY PROVIDE.
   · APARTMENTS - THE NUMBER OF UNITS.

3. STORAGE AREA SCREEN WALLS ARE REQUIRED FOR BUSINESSES AND APARTMENTS THAT UTILIZE BARREL SERVICE. THE WALL SHALL BE DESIGNED TO SCREEN THE BARRELS FROM PUBLIC VIEW.

4. THE LENGTH OF THE PAD WILL DEPEND ON THE NUMBER OF BARRELS RECOMMENDED BY THE SOLID WASTE DEPARTMENT (3' FOR EACH BARREL). THE PAD SHALL BE A MINIMUM OF 3" OF CONCRETE WITHOUT A LIFT. THIS WILL ENABLE THE CUSTOMERS TO ROLL THE BARRELS WITH MINIMUM DIFFICULTY. THE DEPTH SHALL BE 44" AND THE HEIGHT A MINIMUM OF 4'.

5. COLLECTION OF BARRELS WILL FOLLOW THE CURRENT RESIDENTIAL COLLECTION ORDINANCE.

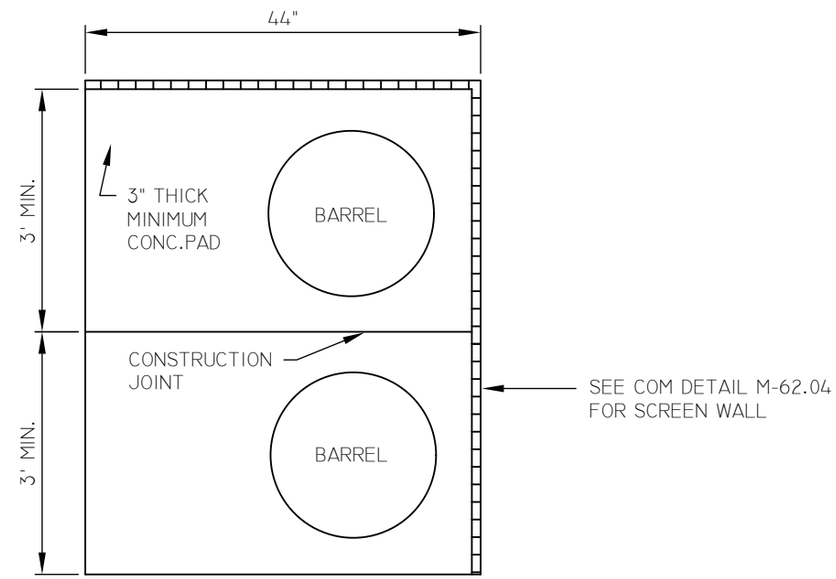

STORAGE AREA SCREEN WALLS FOR BARREL SERVICE

NOT TO SCALE

mesa·az

STORAGE AREA SCREEN WALLS - BARREL SERVICE

DETAIL NO.
M-62.05

REV. 01/31/14

THE CITY OF MESA RESIDENTIAL SOLID WASTE GUIDELINES

SMALL LOT/MULTI-LOT WITH PRIVATE DRIVE BARREL COLLECTION

THE COURTYARD OR CLUSTER TYPE HOME DESIGN THAT DOES NOT ALLOW FOR CURBSIDE PICKUP (IN FRONT OF CUSTOMERS HOME) OF THE SOLID WASTE AND RECYCLABLE BARRELS SHOULD BE MINIMIZED AND MEET THE FOLLOWING CRITERIA:

1. EACH UNIT MUST HAVE A PREDETERMINED LOCATION FOR A MINIMUM OF 2 BARRELS PER UNIT WHERE STREET PARKING IS PROHIBITED FROM 6 AM TO 6 PM ON COLLECTION DAYS. BARRELS SHALL HAVE A DESIGNATED LOCATION ON THE STREET WITH A PERMANENT MARKING ON THE CURBING IDENTIFYING ADDRESS OR UNIT NUMBER. SHOW ALL BARREL LOCATIONS, WITH ADDRESSES, ON SITE PLAN. FOR VISIBILITY TRIANGLE, REFER TO 2012, OR LATEST VERSION OF ENGINEERING AND DESIGN STANDARDS.

2. BARREL MUST BE PHYSICALLY LOCATED IN SUCH A WAY THAT THE DISTANCE TO THE PARCEL IS A MAXIMUM OF 100 FEET. THE LOCATION IS SO CONVENIENT/LOGICALLY PLACED THAT RESIDENT(S) WOULD INSTINCTIVELY KNOW THEIR PLACEMENT LOCATION (ONE WOULD NOT PASS BY ONE OR MORE LOCATIONS TO SET THE BARREL AT THE DESIGNATED LOCATION).

3. ADDITIONALLY, PLACEMENT DESIGNATIONS WILL NOT BE LOCATED NEAR CLUSTER MAILBOX LOCATIONS OR; TO CAUSE A CLUSTER OR CLOSE GROUPING OF BARRELS. BARRELS SHOULD HAVE A MINIMUM 52" SPACING, CENTER TO CENTER OF BARREL. THIS WILL ALLOW FOR 18" SPACING BETWEEN BARRELS ON EACH SIDE. THIS WILL ALLOW FOR BETTER IDENTIFICATION OF BARREL OWNERSHIP AND ACCOUNTABILITY ON THE RESIDENT TO RETRIEVE THE BARRELS IN A TIMELY MANNER.

4. FOR STREETS DESIGNATED FOR CURBSIDE BARREL COLLECTION, TREE PLANTING SHOULD NOT TAKE PLACE WITHIN TEN (10) FEET OF THE CURB AND SHOULD BE SPACED SO AS NOT TO CREATE AN AERIAL OBSTRUCTION FOR THE BARREL DUMPING AT THE FINAL FULL GROWTH DIMENSIONS.

5. THE REQUIRED USE OF IDENTIFIED LOCATIONS (ADDRESSES STAMPED INTO THE CONCRETE) FOR INDIVIDUAL 90-GALLON CONTAINERS MUST BE INCLUDED IN THE HOMEOWNER'S CONDITIONS, COVENANTS, AND RESTRICTIONS (CC&R'S). BARRELS WILL NEED TO BE SET OUT FOR COLLECTION BY 6:00 A.M. AND REMOVED NO LATER THAN 6:00 P.M. ON THE DAY OF COLLECTION.

6. GARAGE OR STORAGE AREAS MUST HAVE ROOM TO ACCOMMODATE ONE 90-GALLON REFUSE CONTAINER, ONE 90-GALLON RECYCLING CONTAINER, AND ONE 90-GALLON GREEN WASTE CONTAINER.

7. GATES OR DOOR OPENING MUST ALLOW FOR CONTAINER PASSAGE OF APPROXIMATELY 33 INCHES IN WIDTH.

SUBDIVISION REQUIREMENTS FOR AUTOMATED BARREL COLLECTION

TO ENSURE THAT THE SOLID WASTE DEPARTMENT PROVIDES SAFE AND EFFICIENT RESIDENTIAL SOLID WASTE SERVICES TO OUR CUSTOMERS, THE FOLLOWING LIST HAS BEEN DEVELOPED WITH REGARD TO ALL PLANS/ZONING CHANGES:

1. GARAGE OR STORAGE AREAS MUST HAVE ROOM TO ACCOMMODATE ONE 90-GALLON REFUSE CONTAINER, ONE 90-GALLON RECYCLING CONTAINER, AND ONE 90-GALLON GREEN WASTE CONTAINER.

2. GATES OR DOOR OPENING MUST ALLOW FOR CONTAINER PASSAGE OF APPROXIMATELY 33 INCHES IN WIDTH.

3. PRIVATE STREETS MUST HAVE AN AREA FOR COLLECTION WITHOUT OBSTRUCTION.

4. PRIVATE STREETS MUST BE DESIGNED TO WITHSTAND THE WEIGHT OF 37 CUBIC YARD COLLECTION VEHICLES (APPROX. 29 TONS).

5. ALL STREETS MUST BE DESIGNED SO THAT COLLECTION VEHICLES ARE NOT FORCED TO BACK UP AT ANY TIME (HAMMERHEAD DRIVES AND DEAD-ENDS ARE UNACCEPTABLE).

6. PRIVATE STREETS WITH CUL-DE-SACS MUST BE DESIGNED TO MEET CITY OF MESA STANDARDS FOR CUL-DE-SAC TURNING RADII.

7. THE REQUIRED USE OF IDENTIFIED LOCATIONS (ADDRESSES STAMPED INTO THE CONCRETE) FOR INDIVIDUAL 90-GALLON CONTAINERS MUST BE INCLUDED IN THE HOMEOWNER'S CONDITIONS, COVENANTS, AND RESTRICTIONS (CC&R'S). BARRELS WILL NEED TO BE SET OUT FOR COLLECTION BY 6:00 A.M. AND REMOVED NO LATER THAN 6:00 P.M. ON THE DAY OF COLLECTION.

8. DEVELOPERS OF GATED SUBDIVISIONS MUST SUPPLY SOLID WASTE COLLECTION SERVICES WITH A GATE CODE OR REMOTE ACCESS AT THE TIME OF INSTALLATION. ALL GATES MUST OPEN FROM THE CODE OR REMOTE PROVIDED, WITH THE EXCEPTION OF EXIT ONLY GATES. EXIT ONLY GATES WILL BE WIRED FOR AUTOMATIC OPENING. ALL GATES MUST REMAIN OPEN FOR A MINIMUM 30 SECONDS ONCE FULLY OPEN, OR UNTIL COLLECTION VEHICLE SAFELY PASSES THROUGH GATE PATH.

9. FOR STREETS DESIGNATED FOR CURBSIDE BARREL COLLECTION, TREE PLANTING SHOULD NOT TAKE PLACE WITHIN TEN (10) FEET OF THE CURB AND SHOULD BE SPACED SO AS NOT TO CREATE AN AERIAL OBSTRUCTION FOR THE BARREL DUMPING AT THE FINAL FULL GROWTH DIMENSIONS.

10. STREETLIGHTS WILL NEED TO BE DESIGNATED TO ACCOMMODATE THE HEIGHT OF THE SOLID WASTE COLLECTION VEHICLE.

11. MINIMUM 14' OVERHEAD CLEARANCE IS NEEDED FOR COLLECTION VEHICLE TO SAFELY NEGOTIATE.

12. BARREL PAD LOCATIONS SHALL BE NO MORE THAN 75' FROM UNIT UTILIZING THE PAD.

mesa·az

RESIDENTIAL SOLID WASTE GUIDELINES

DETAIL NO.
M-62.06

REV. 02/10/2015

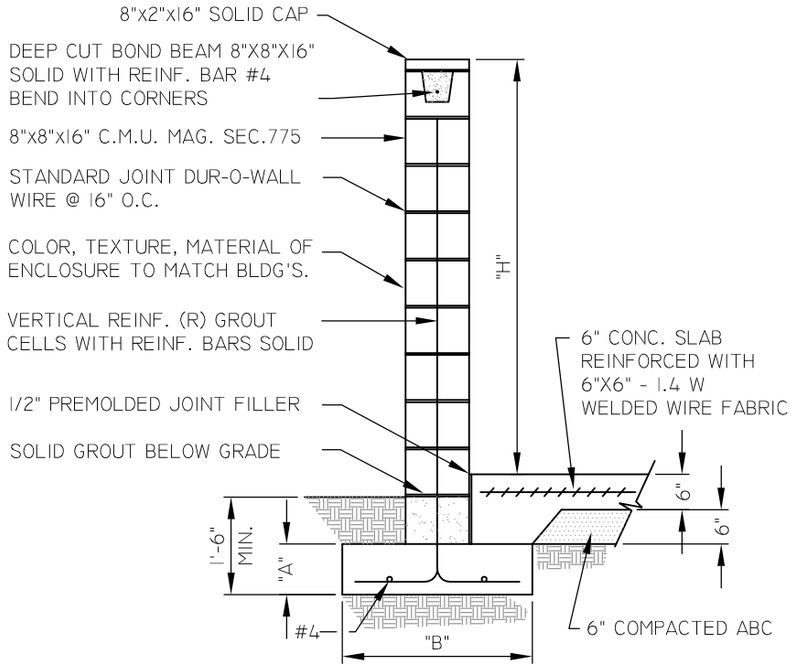

SECTION A-A

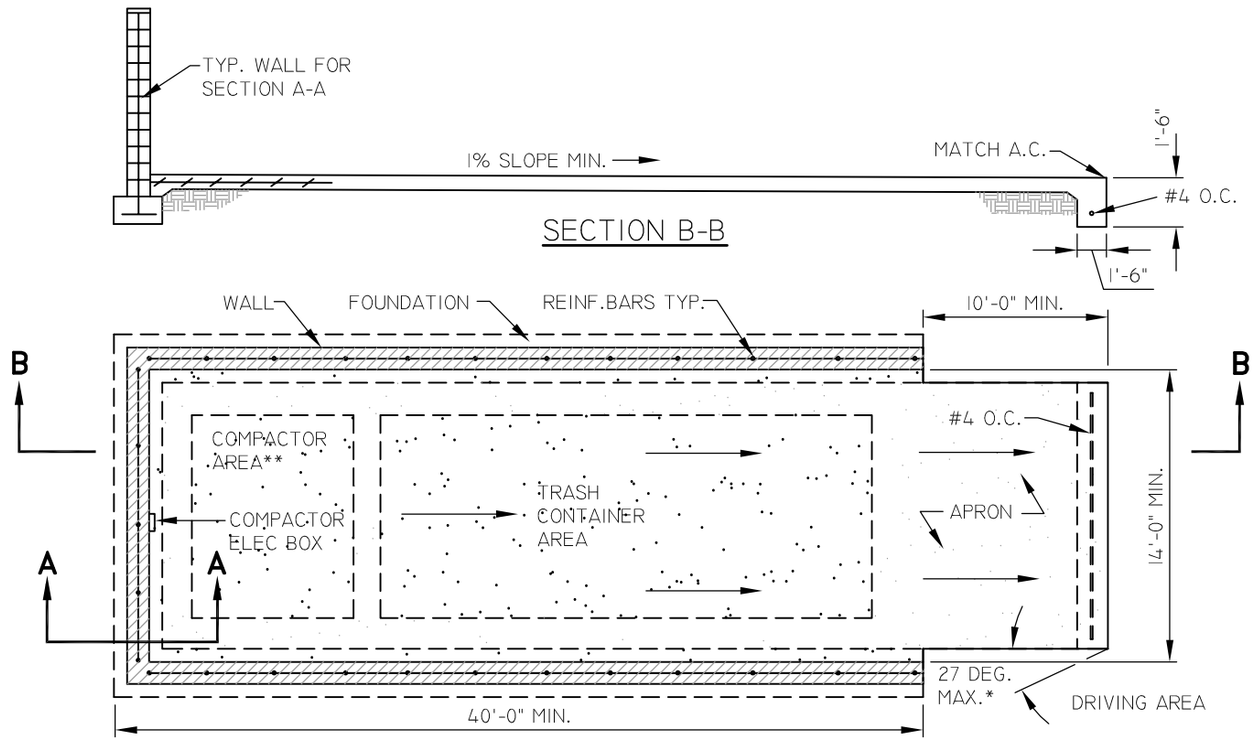

SECTION B-B

LARGE COMPACTOR REFUSE AREA

TABLE #1

"H"	"A"	"B"	"R"
6'-0"	12"	24"	#4 @ 48"
7'-0"	12"	24"	#5 @ 48"
8'-0"	12"	24"	#5 @ 48"
9'-0"	12"	28"	#6 @ 48"
10'-0"	12"	30"	#6 @ 48"

NOTES:

1. CONSTRUCT ENCLOSURE PER COM DETAIL M-62.04.
2. ALL INTERIOR PAD DIMENSIONS ARE MINIMUMS.
3. WALL HEIGHT DETERMINED BY COMPACTOR HEIGHT (6'-0" MIN.).
* 4. FINAL LOCATION AND ORIENTATION TO BE DETERMINED BY THE CITY.
** 5. PROVIDE PEDESTRIAN ACCESS TO THIS AREA (THRU WALL)
6. CONCRETE f'_c = 3,000 PSI

   REINFORCING f_y = 60,000 PSI
   f_s = 24,000 PSI

   MASONRY f_m = 1,500 PSI
7. SAFETY POSTS, WHEEL STOPS, & GUIDE RAILS SECURED TO CONCRETE SLAB, ARE REQUIRED FOR ALL ENCLOSURES. SAFETY POSTS ARE ADDRESSED IN COM DETAIL M-62.04.
8. PROPER CLEANING METHODS ARE TO BE USED TO PREVENT THE DISCHARGE OF WASH WATER INTO PUBLIC STORM DRAIN SYSTEM. PLEASE CONTACT THE CITY OF MESA AT (480) 644-3599 FOR A LIST OF BEST MANAGEMENT PRACTICES THAT WILL HELP YOUR FACILITY COMPLY WITH ENVIRONMENTAL REGULATIONS.
9. ANY DOORS PROVIDED (NOT SHOWN ON THIS DETAIL) SHALL BE SELF-CLOSING AND SELF-LATCHING.
10. GATES (NOT SHOWN ON THIS DETAIL) SHALL BE PROVIDED FOR SCREENING PURPOSES ACROSS THE FRONT OF THE ENCLOSURE. STANDARDS FOR GATES ARE ADDRESSED IN COM DETAIL M-62.04.
11. GATES, HINGES, AND MOUNTING HARDWARE SHALL NOT INTRUDE UPON MINIMUM NET ENCLOSURE OPENING.
12. ENCLOSURES SHALL HAVE A MINIMUM OPENING OF 14'.
13. REFER TO COM DETAIL M-62.01 FOR CLEARANCE REQUIREMENTS.
14. SOME COMPACTORS MAY HAVE COMPACTOR AREA IN FRONT (PREFERRED METHOD). SELF LOADING FRONT LOAD COMPACTOR PREFERRED.

NOT TO SCALE

mesa·az

LARGE COMPACTOR REFUSE AREA

DETAIL NO. M-62.07

REV. 02/10/2015

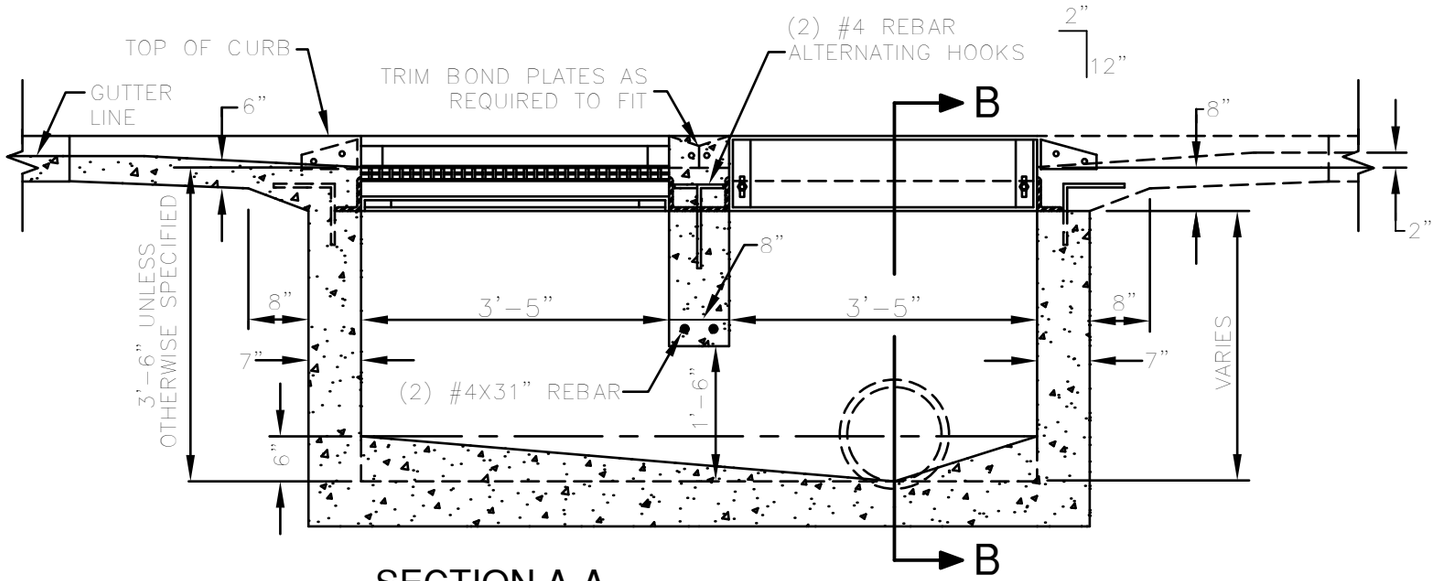

SECTION A-A

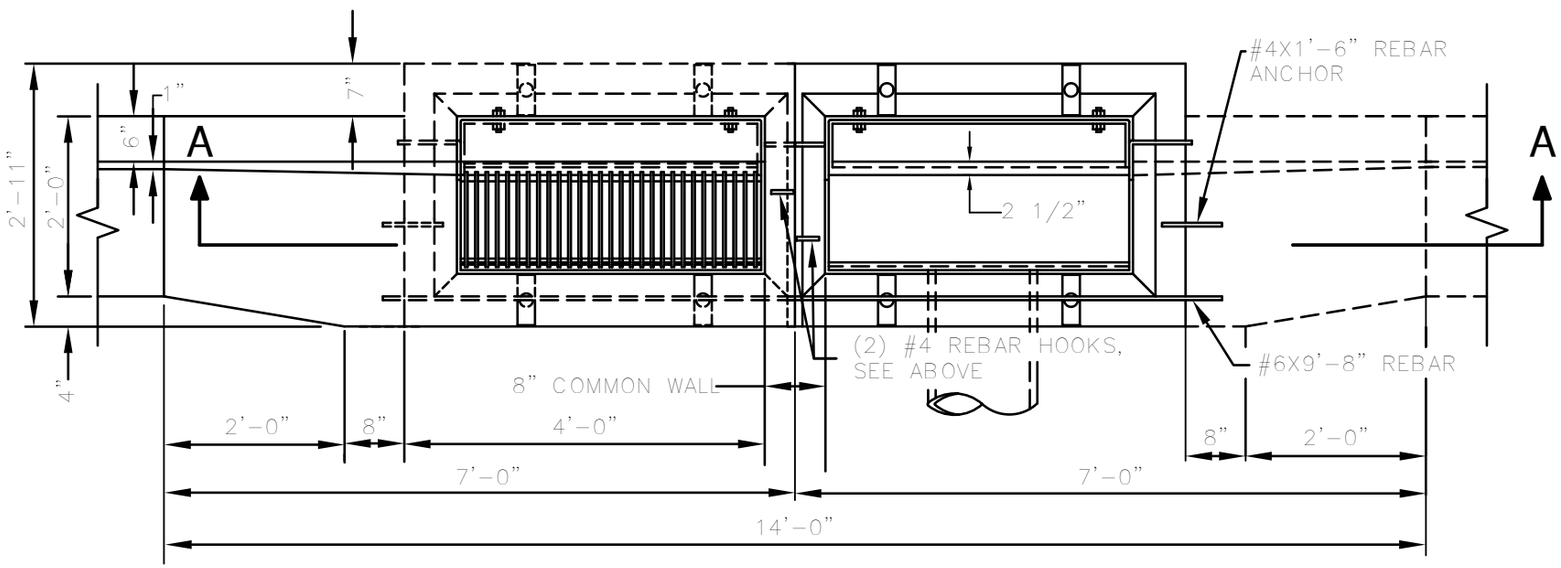

HALF PLAN GUTTER & GRATE

HALF PLAN FRAME & ANCHORS

NOTES

1. ADJUSTABLE CURB, FRAME, AND GRATING UNITS SHALL COMPLY WITH MAG STD DETAIL 534
2. PIPE MAY ENTER OR LEAVE ANY WALL. BOTTOM OF BOX TO BE SLOPED TO OUTLET PIPE FROM ALL DIRECTIONS AND TROWELLED TO A HARD SMOOTH SURFACE.
3. CONNECTION PIPES MAY BE PLACED IN ANY POSITION AROUND THE WALLS PROVIDED THE POSITION IS CONSISTENT WITH THE PLAN
4. OUTLET PIPE SHALL BE TRIMMED TO FINAL SHAPE AND LENGTH BEFORE CONCRETE IS POURED.
5. ALL STRUCTURAL STEEL TO BE PAINTED ONE SHOP COAT OF NO. 1 D PAINT AND TWO FIELD COATS OF NO. 10 PAINT PER MAG SECTION 790.
6. ALL REINFORCING TO HAVE A MINIMUM OF 2" COVER.
7. FOR DETAIL OF CURB FRAME, GRATING AND ANCHORS REFER TO MAG STD DETAIL 534-2, 534-3, OR THE VANED GRATE OF 534-5. 25.
8. ALL CONCRETE SHALL BE CLASS 'A' PER MAG SECTION 7

FOR SECTION B-B, SEE MAG STD DETAIL 534-1

NOT TO SCALE

mesa·az

DOUBLE CATCH BASIN PER MAG DETAIL 534, TYPE E

DETAIL NO. M-64

REV. 01/31/2014

NOTE
ALL PIPE SHALL BE 1 1/2 SCHEDULE 40 GALVANIZED PIPE (1.9" O.D., 2.72#/L.F.).

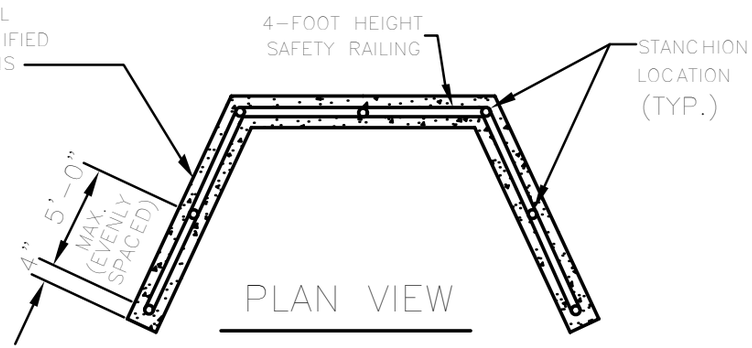

PLAN VIEW

N.T.S.

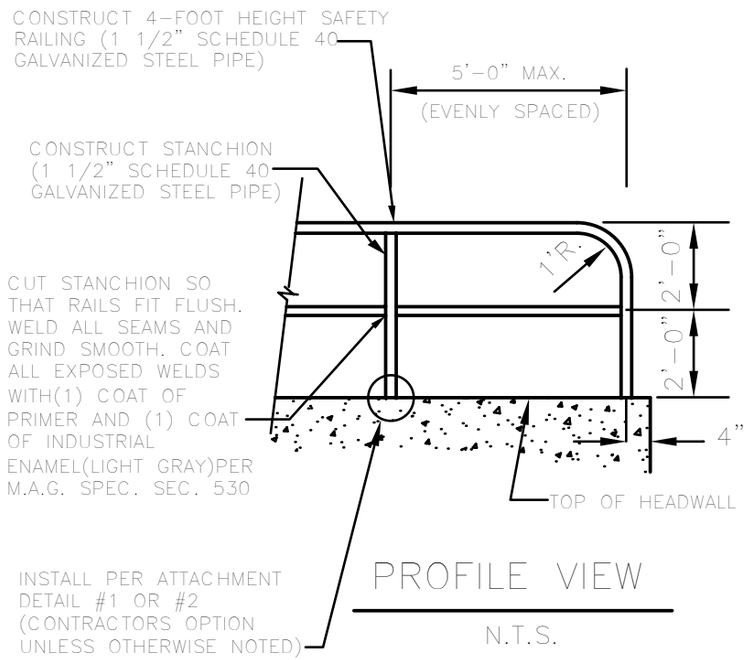

PROFILE VIEW

N.T.S.

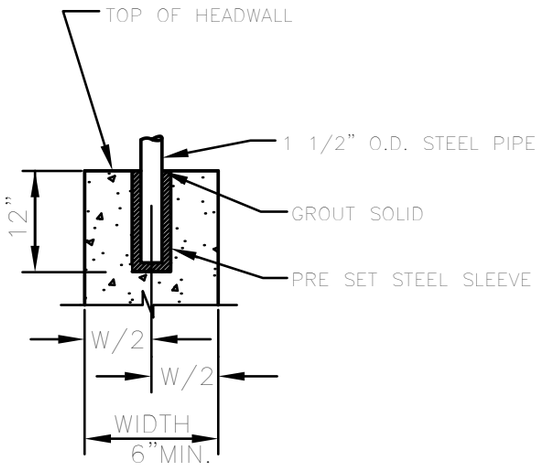

ATTACHMENT DETAIL NO. 1

N.T.S.

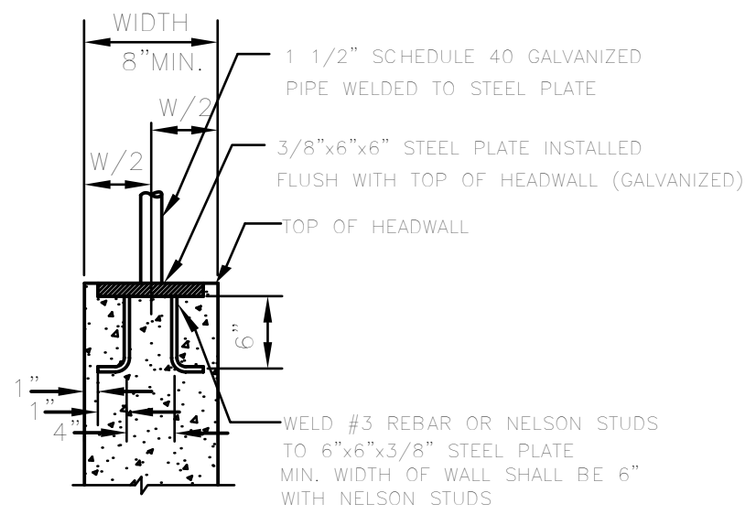

ATTACHMENT DETAIL NO. 2

N.T.S.

NOT TO SCALE

mesa·az

SAFETY RAILING DETAILS

DETAIL NO.
M-65

REV. 02/04/13

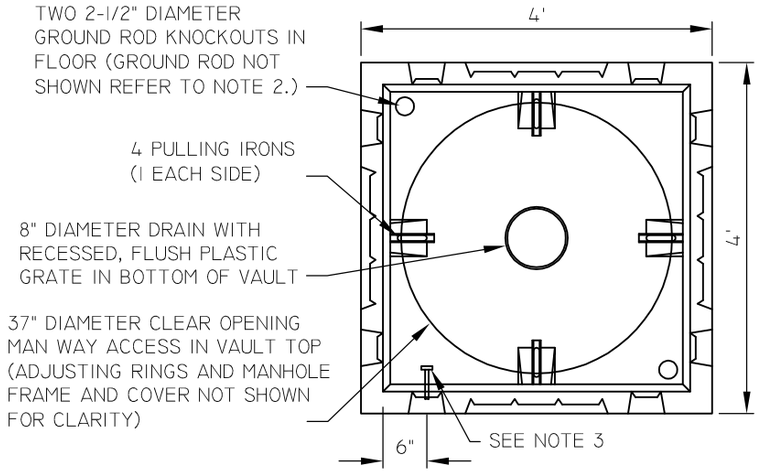

PLAN VIEW

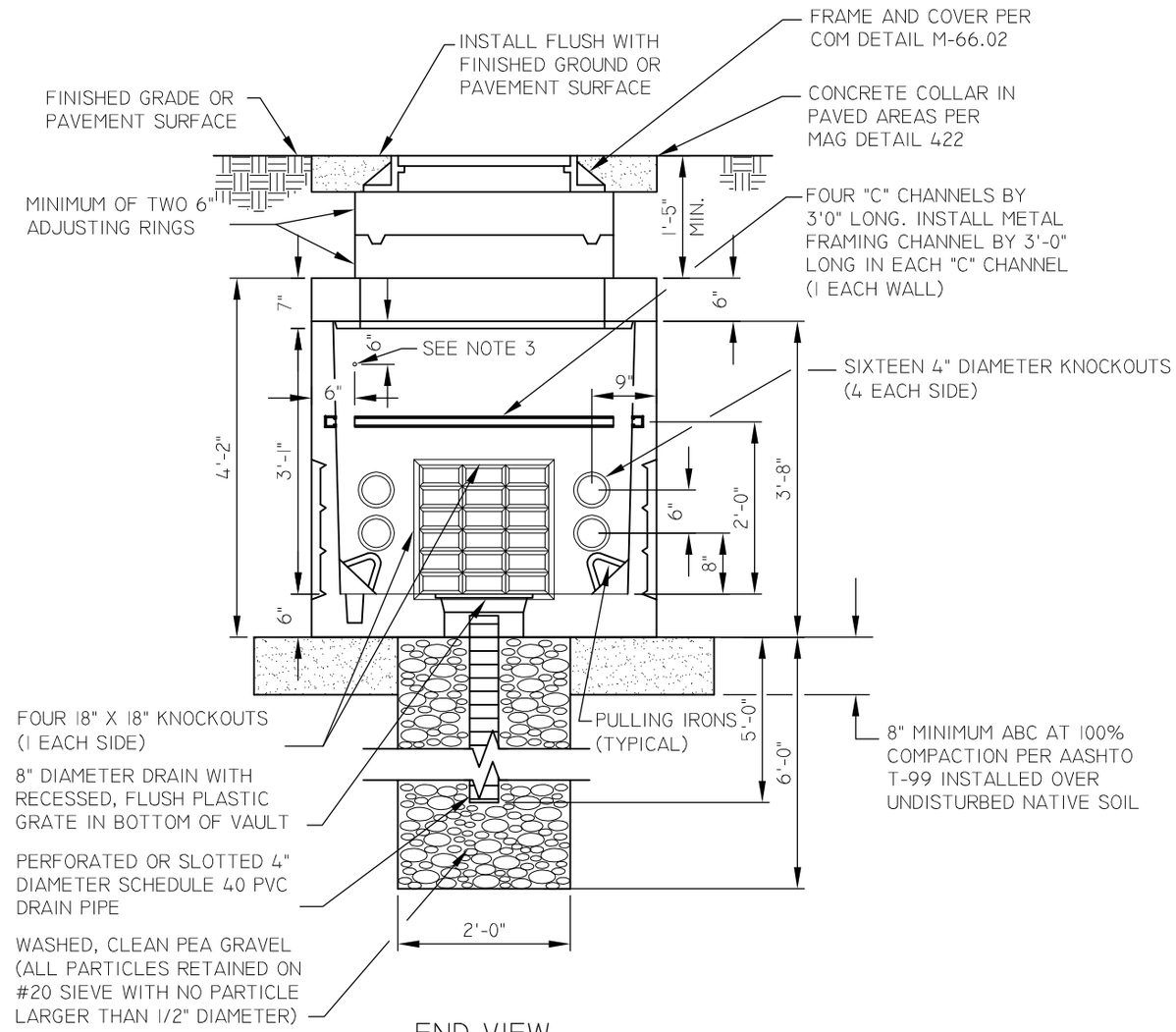

END VIEW

NOTES

1. VAULT SHALL BE PRECAST CONCRETE. SHOP DRAWING SUBMITTAL IS REQUIRED.
2. ONE 10' LONG BY 5/8" DIAMETER COPPER GROUND ROD SHALL BE INSTALLED IN ONE OF THE GROUND ROD KNOCKOUTS. THE TOP 4 INCHES OF THE ROD SHALL BE EXPOSED ABOVE THE FLOOR OF THE VAULT FOR FUTURE INSTALLATION (BY OTHERS) OF GROUNDING CLAMPS.
3. INSTALL 1/2" DIAMETER THREADED SST EPOXY ANCHOR BOLT IN MANHOLE EMBED 2" MINIMUM INTO MANHOLE WALL WITH 2" MINIMUM EXPOSED. CITY WILL DIRECT CONTRACTOR RELATIVE TO IN WHICH CORNER OF MANHOLE TO INSTALL SAID BOLT. ALL TRACER WIRES ENTERING MANHOLE SHALL BE ROUTED AROUND THE EDGES OF THE MANHOLE TO THIS BOLT LOCATION. CONNECT ALL WIRES TOGETHER AND ATTACH TO THIS BOLT.

NOT TO SCALE

mesa·az

FIBER OPTIC MANHOLE

DETAIL NO.
M-66.01

REV. 12/10/14

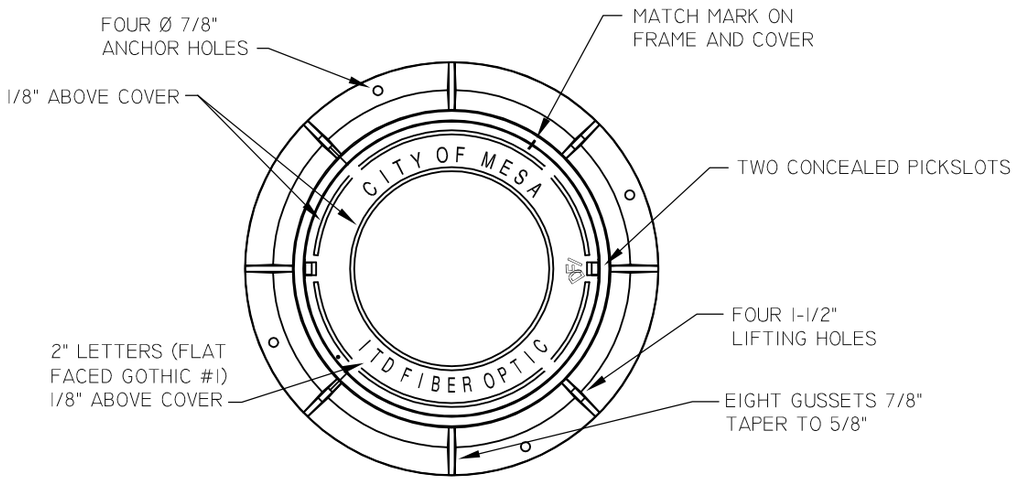

PLAN

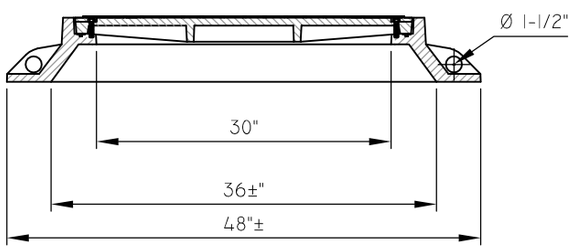

SECTION

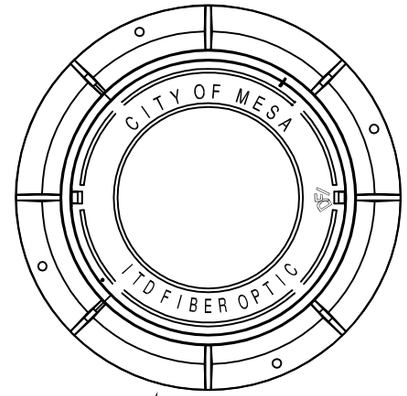

MANHOLE LID FOR ITD
FIBER OPTIC LOCATIONS

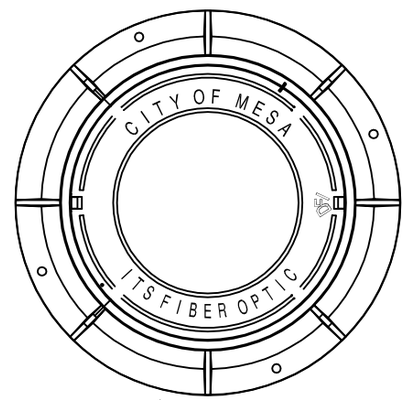

MANHOLE LID FOR ITS/ TRAFFIC
SIGNAL FIBER OPTIC LOCATIONS.

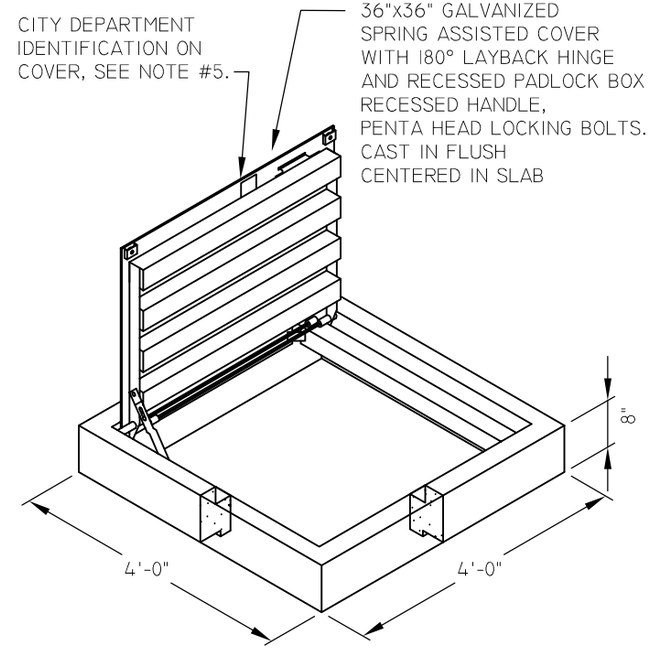

NOTES

1. FURNISH WITH MACHINED HORIZONTAL BEARING SURFACE.
2. FURNISH WITH T-GASKET.
3. CASTINGS SHALL CONFORM TO MAG SPECIFICATION SECTION 787 AND H20 LOADING REQUIREMENTS.
4. FRAME IS 310 POUNDS. COVER IS 150 POUNDS.
5. GALVANIZED COVER SHALL INCLUDE IDENTIFICATION OF 1" LETTERS IN STANDARD MARKINGS "CITY OF MESA ITS FIBER OPTIC" OR "CITY OF MESA ITD FIBER OPTIC" AS NOTED ON APPROVED PLANS.
6. SEE APPROVED PRODUCTS LIST AVAILABLE AT WWW.MESAAZ.GOV.

NOT TO SCALE

mesa·az

FIBER OPTIC MANHOLE FRAME AND COVER

DETAIL NO.
M-66.02

REV. 03/25/2015

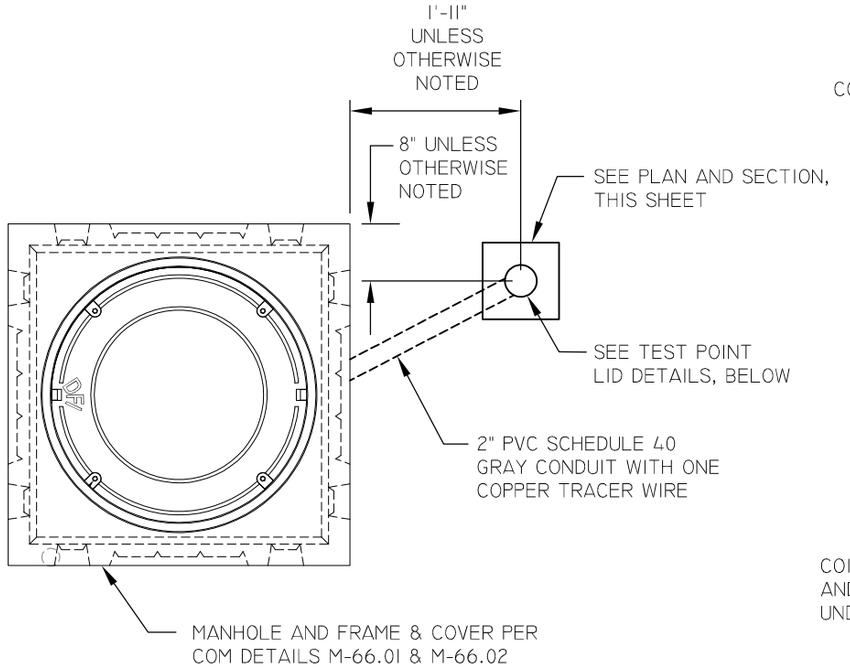

PLAN

ITD TEST POINT LID

ITS/TRAFFIC SIGNAL TEST POINT LID

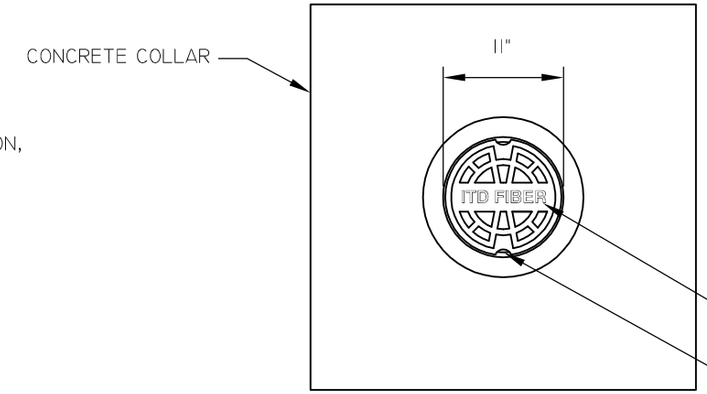

PLAN

NOTES

1. FRAME AND LID SHALL BE CAST GRAY IRON PER ASTM A-48 CLASS 35B.
2. FRAME IS 25 POUNDS. LID IS 13 POUNDS.
3. NO PAINT.
4. H-20 TRAFFIC RATING REQUIRED.
5. ALL UNUSED AND FUTURE CONDUITS SHALL BE PLUGGED WITH AN EXPANDABLE PLUG. ALL CABLE FILLED CONDUITS SHALL BE PLUGGED WITH SIMPLEX PLUG. SEE APPROVED PRODUCTS LIST FOR SPECIFIC PRODUCTS.

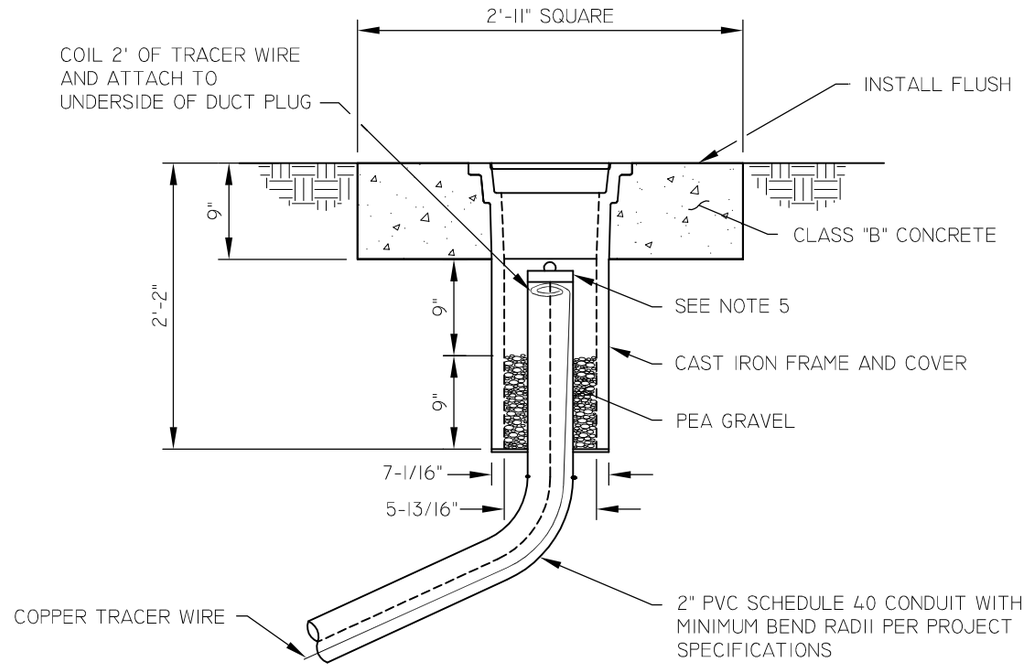

SECTION

NOT TO SCALE

mesa·az

FIBER OPTIC TEST POINT DETAIL

DETAIL NO.
M-66.03

REV. 11/01/14

NOTES

1. ALL KNOCKOUTS SHALL BE SEALED TIGHT UPON USAGE.
2. ALL UNUSED AND FUTURE CONDUITS SHALL BE PLUGGED WITH AN EXPANDABLE PLUG. ALL CABLE FILLED CONDUITS SHALL BE PLUGGED WITH SIMPLEX PLUG. SEE APPROVED PRODUCTS LIST FOR SPECIFIC PRODUCTS.

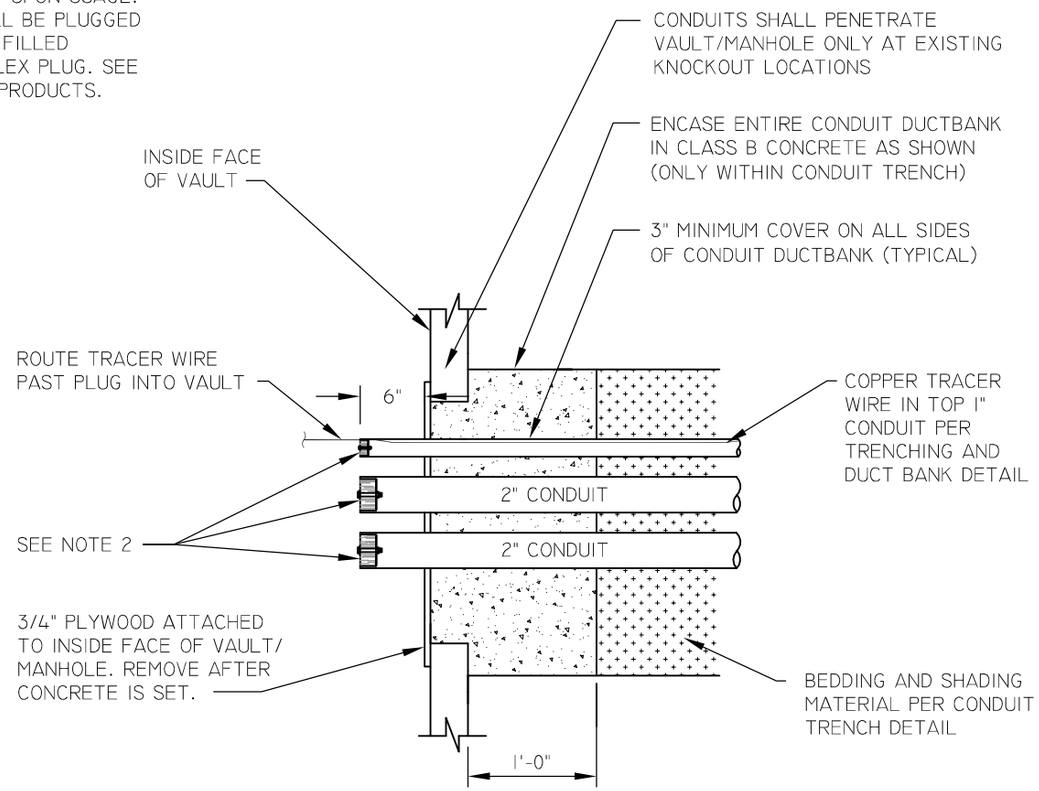

SECTION

NOT TO SCALE

mesa·az

FIBER OPTIC VAULT/ MANHOLE KNOCKOUT DETAIL

DETAIL NO. M-66.04

REV. 11/01/14

NOTES

1. HORIZONTAL COILING SHALL BE UTILIZED WHEN MANHOLES AND VAULTS ARE SHALLOW AND VERTICAL WALL SPACE IS LIMITED.
2. SEE COM DETAIL M-66.12 FOR CABLE SPOOL LENGTH.

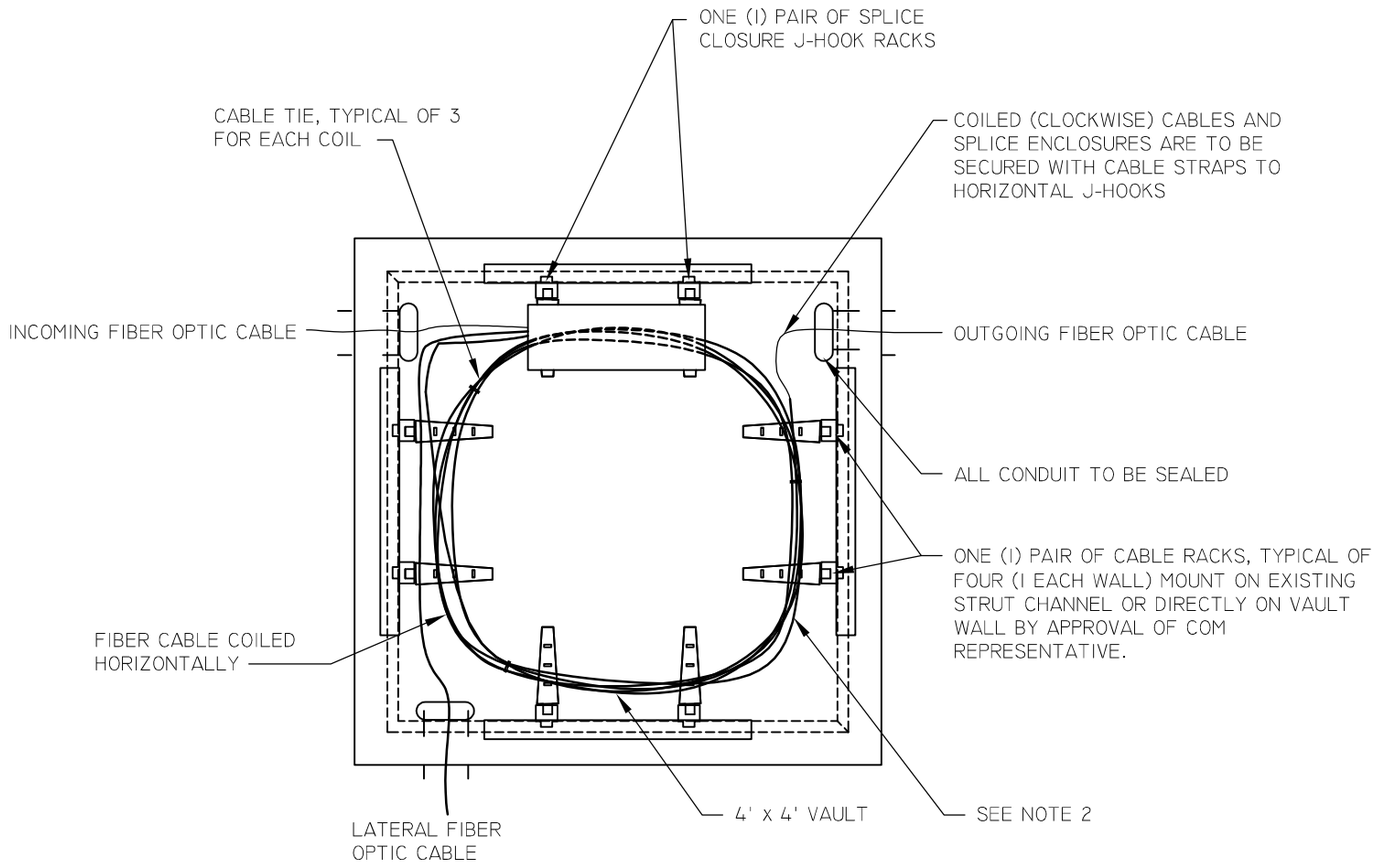

PLAN

NOT TO SCALE

mesa·az

HORIZONTAL COILED FIBER OPTIC CABLE & SPLICE CLOSURE RACKING

DETAIL NO. M-66.05

REV. 01/21/2015

NOTE

1. SEE COM DETAIL M-66.12 FOR CABLE SPOOL LENGTH.

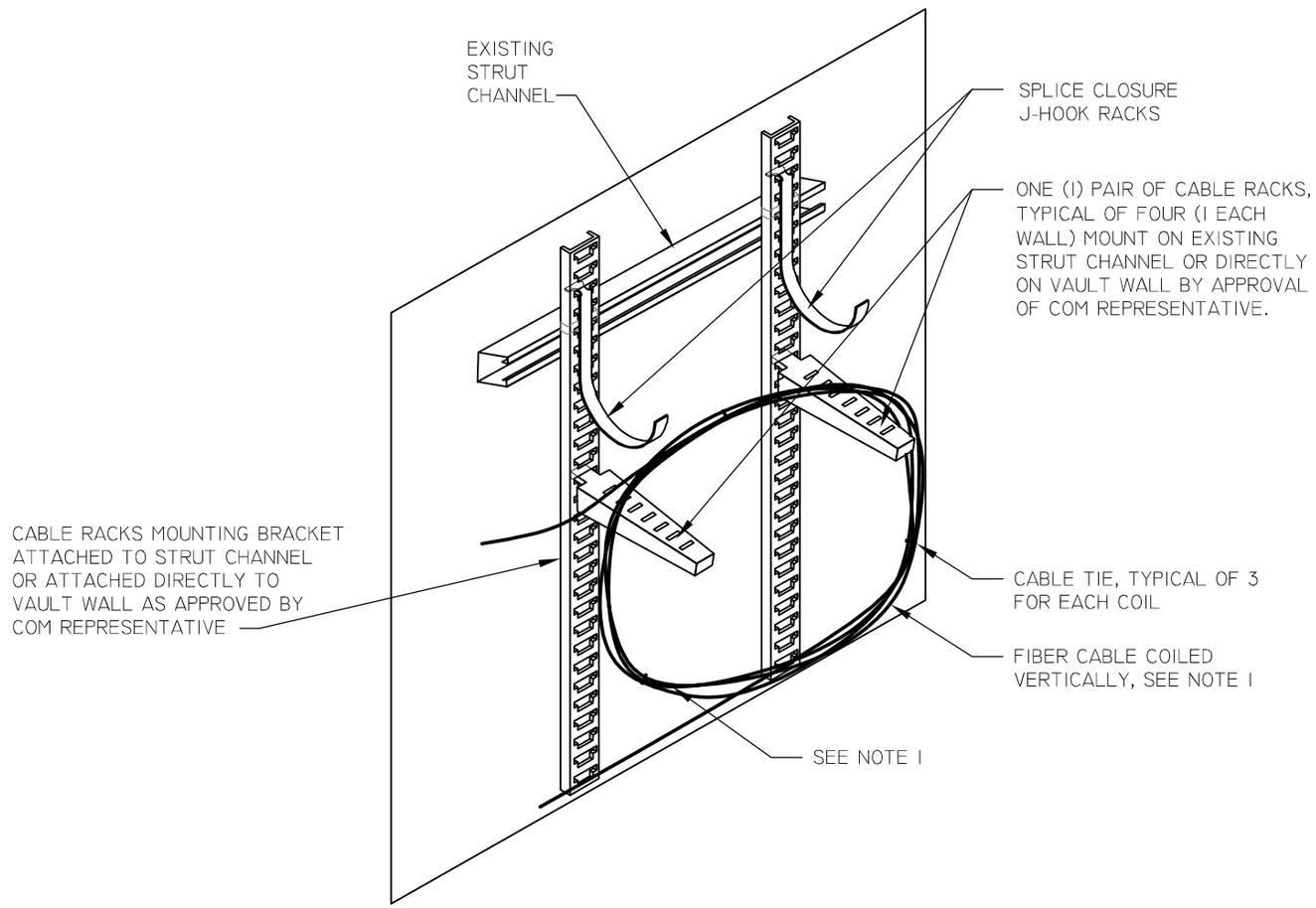

PERSPECTIVE

NOT TO SCALE

mesa·az

VERTICAL COILED FIBER OPTIC CABLE & SPLICE CLOSURE RACKING

DETAIL NO. M-66.06

REV. 12/09/14

NOTES

1. SEE COM DETAIL M-66.12 FOR CABLE SPOOL LENGTH.
2. REFER TO COM DETAIL M-93.01 FOR PULL BOX INSTALLATION.
3. PULL BOX COVER LETTERING SHALL BE 1" LETTERS CAST IN STANDARD MARKINGS "CITY OF MESA ITS FIBER OPTIC" OR "CITY OF MESA ITD FIBER OPTIC" AS NOTED ON APPROVED PLANS.

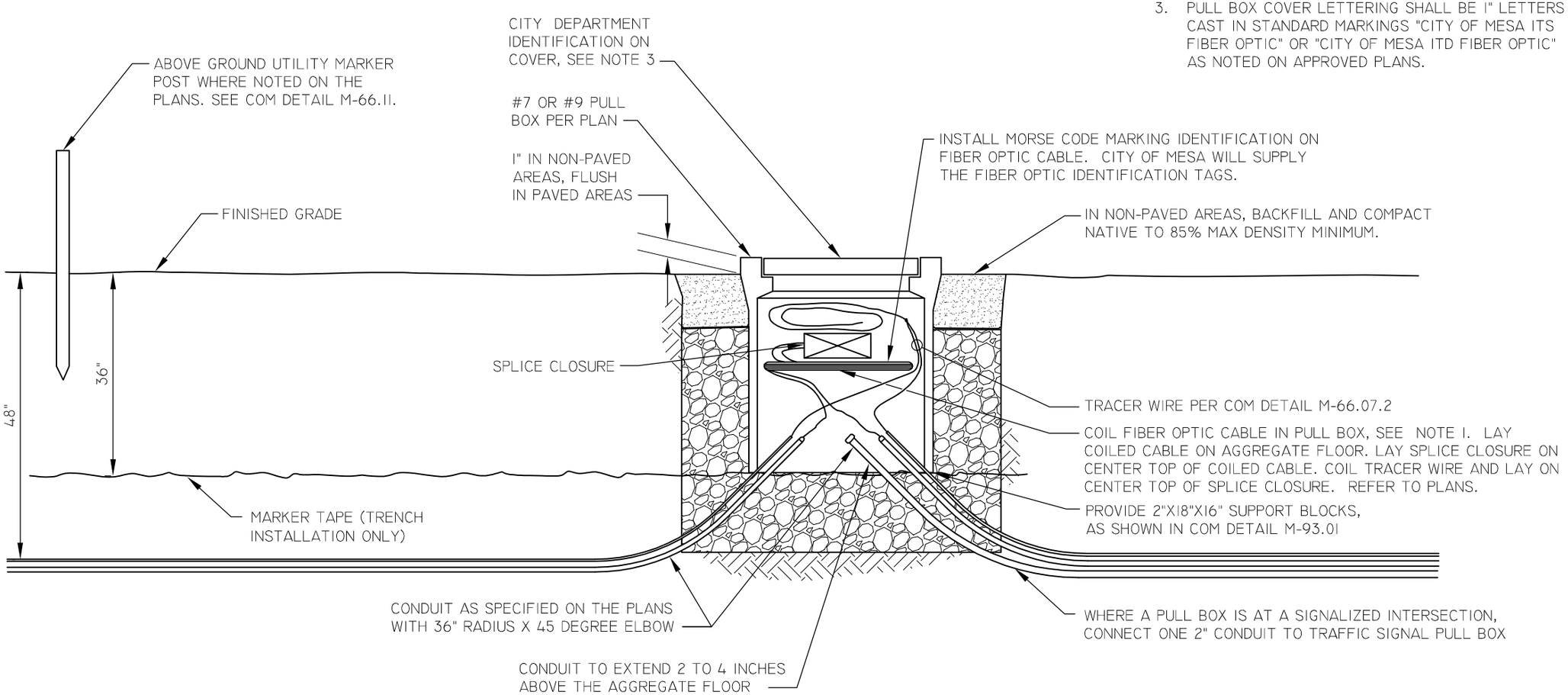

PULLBOX, CONDUIT AND CABLE MANAGEMENT

NOT TO SCALE

mesa·az

STANDARD FIBER OPTIC CABLE INSTALLATION PULL BOX

DETAIL NO.
M-66.07.1

REV. 12/09/2014

NOTES

1. WHEN LOW VOLTAGE CONDUIT IS BEING INSTALLED, THE CONDUITS FOR THE FIBER OPTIC CABLE SHALL SHARE A COMMON TRENCH WITH THE LOW VOLTAGE CONDUIT.
2. PULL BOXES SHALL BE SPACED AS SHOWN ON THE PLANS.
3. ALL CONDUITS OF THE QUAD DUCT BANK SHALL CONTAIN A PULL TAPE 2500LB TENSILE STRENGTH. THE PULL TAPE ENDS SHALL BE TIED TO PREVENT THE ENDS FROM INADVERTENTLY BEING PULLED BACK INTO THE CONDUITS. CAP ALL UNUSED AND FUTURE CONDUITS WITH CONDUIT PLUG, SEE APPROVED PRODUCT LIST. CAP ALL FIBER FILLED CONDUITS WITH FIBER OPTIC SIMPLEX PLUG, SEE APPROVED PRODUCT LIST.

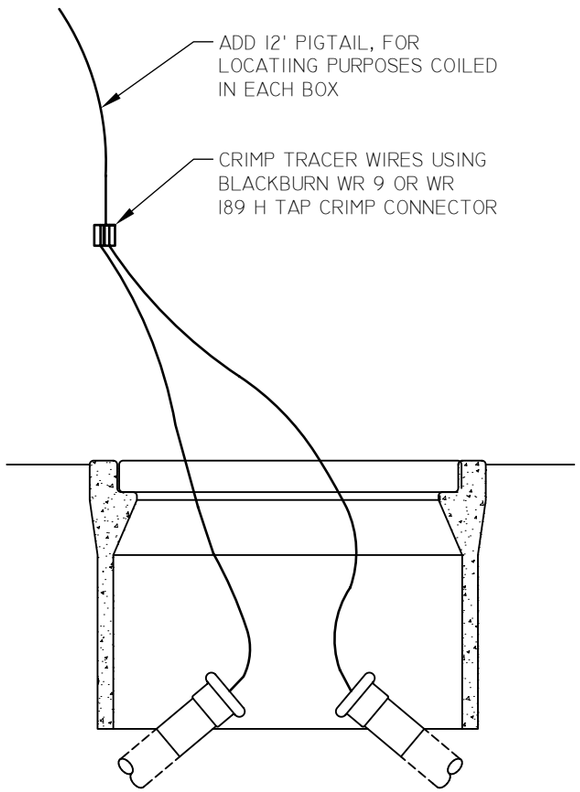

TRACER WIRE DETAIL

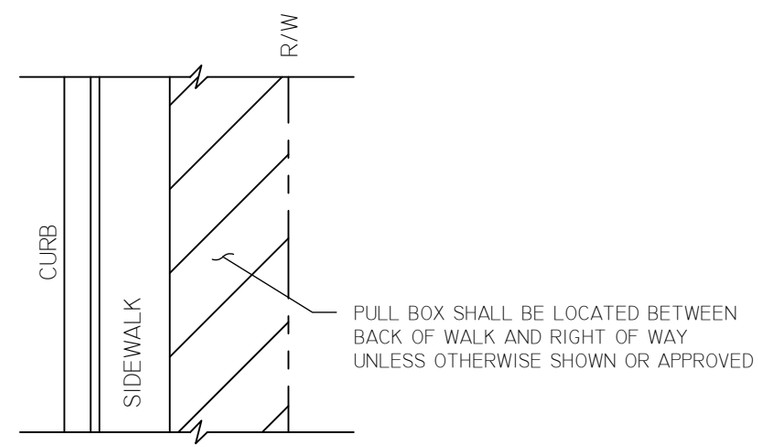

TYPICAL PULL BOX LOCATION

NOT TO SCALE

STANDARD FIBER OPTIC CABLE INSTALLATION IN PULL BOX

DETAIL NO. M-66.07.2

REV. 12/04/2014

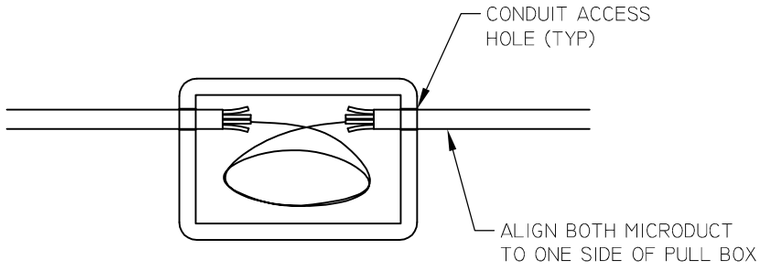

PLAN

SEE M-66.08.2 FOR
REFERENCED NOTES

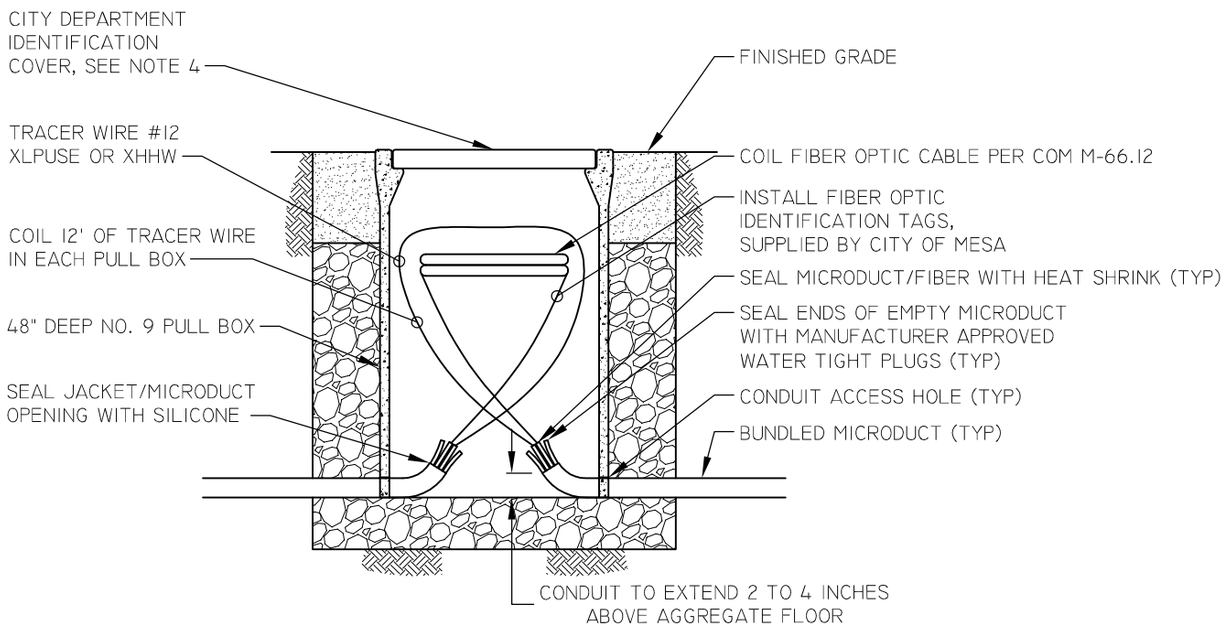

SECTION
MICRODUCT INSTALLATION IN
4' DEEP NO. 9 PULL BOX

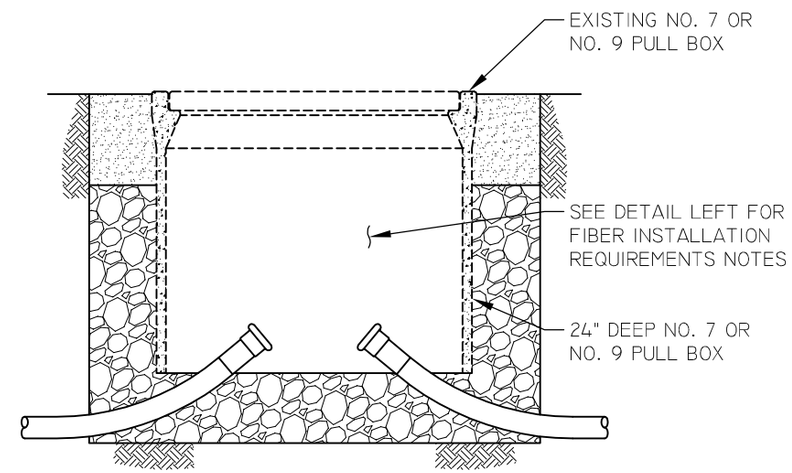

SECTION
MICRODUCT INSTALLATION IN
EXISTING NO. 7 OR NO. 9 PULL BOX

NOT TO SCALE

mesa·az

MICRODUCT INSTALLATION IN PULL BOXES

DETAIL NO.
M-66.08.1

REV. 12/09/14

NOTES

1. ALIGN MICRODUCT ENTRY INTO PULL BOX TO ONE SIDE TO AID IN COILING OF BLACK FIBER AND TRACER WIRE.
2. REFER TO PLANS FOR PULL BOX SIZE TO USE.
3. REFER TO COM DETAIL M-93.01 FOR PULL BOX INSTALLATION.
4. PULL BOX COVER LETTERING SHALL BE 1" LETTERS CAST IN STANDARD MARKINGS "CITY OF MESA ITS FIBER OPTIC" OR "CITY OF MESA ITD FIBER OPTIC".
5. PULL BOXES SHALL BE SPACED APPROXIMATELY 650' APART.
6. CABLE SHALL BE INSTALLED AS ONE CONTINUOUS PIECE WITH NO SPLICES.
7. MICRODUCTS FOR FIBER SYSTEM SHALL BE BLOWN OUT WITH COMPRESSED AIR AND HAVE A HDPE BALL BLOWN THROUGH BEFORE FIBER CABLE MANDREL PROCEDURE. A TRAFFIC SIGNAL TECHNICIAN SHALL BE ON SITE DURING MANDREL PROCEDURE ON 2" QUAD DUCT INSTALLATIONS.
8. ALL UNUSED MICRODUCTS SHALL BE CAPPED AND SEALED WITH MICRODUCT MANUFACTURER APPROVED WATER TIGHT CAP.
9. SEAL MICRODUCT JACKET OPENINGS WITH SILICONE. SEAL ENDS OF THOSE MICRODUCTS CONTAINING FIBER OPTIC CABLE WITH HEAT SHRINK.
10. CONTRACTOR SHALL PERFORM AN OPTICAL TIME-DOMAIN REFLECTOMETER (O.T.D.R.) TEST ON ALL FIBERS WITH THE TRAFFIC SIGNAL INSPECTOR PRESENT BEFORE FINAL ACCEPTANCE. OPERATOR SHALL BE QUALIFIED TO PERFORM TEST. WRITTEN TEST RESULTS SHALL BE PROVIDED TO INSPECTOR AS TO RESULTS OF EACH FIBER TESTED.
11. TRACER WIRE SHALL BE SPLICED WITHIN THE PULL BOX ONLY. 12" OF TRACER WIRE SHALL BE LOOPED FROM THE TOP OF THE PULL BOX FOR LOCATING PURPOSES.
12. FOR CITY OF MESA ITD FIBER OPTIC & ITS TRAFFIC SIGNAL APPROVED PRODUCTS. SEE APPROVED PRODUCT LIST AT HTTP://WWW.MESAAZ.GOV/ENGINEERING/APPROVEDPRODUCTLIST.ASPX
13. FOR NEW PULL BOX INSTALLATIONS MINIMUM BOX SIZE WILL BE 48 INCH DEEP No. 9 PULL BOX.

mesa·az

MICRODUCT INSTALLATION IN PULL BOXES

DETAIL NO.
M-66.08.2

REV. 12/09/14

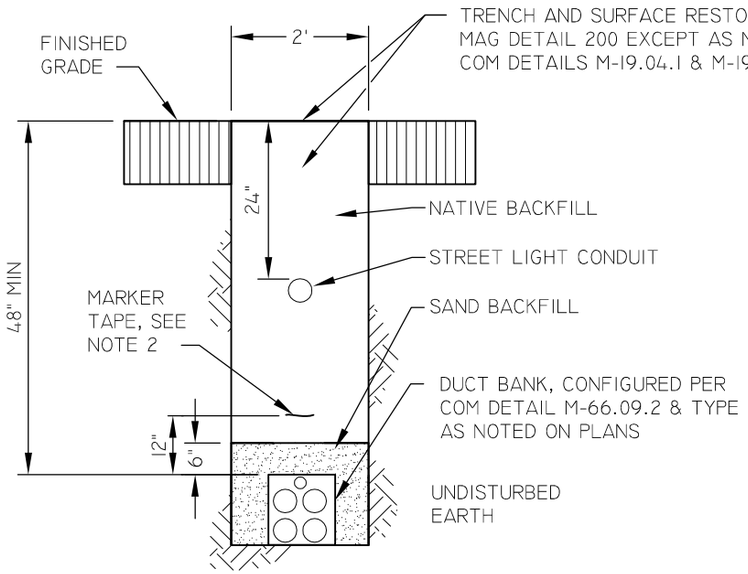

FIBER OPTIC TRUNKLINE

TRENCHED

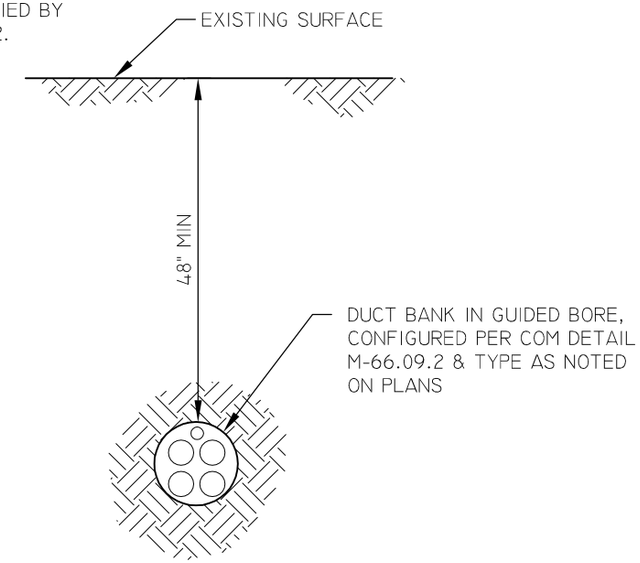

FIBER OPTIC TRUNKLINE

JACKED, DRILLED OR BORED

NOTES

1. TRACER WIRE SHALL BE #12 AWG XLP OR XHHW IN ACCORDANCE WITH THE TECHNICAL SPECIFICATIONS.
2. MARKER TAPE SHALL BE IN ACCORDANCE WITH THE TECHNICAL SPECIFICATIONS AND SHALL BE CENTERED OVER CONDUIT AND INSTALLED AT 12" ABOVE DUCT BANK.
3. ALL UNUSED CONDUITS OF THE DUCT BANK SHALL CONTAIN A PULL TAPE OF 2500 LB TENSILE STRENGTH. THE PULL TAPE ENDS SHALL BE TIED OFF TO PREVENT THE ENDS FROM INADVERTENTLY BEING PULLED BACK INTO THE CONDUITS. PULL TAPE SHALL BE LOW ELONGATION, AND SUITABLY LUBRICATED.
4. CONDUIT SHALL BE PROVIDED AND CONSTRUCTED IN ACCORDANCE WITH THE TECHNICAL SPECIFICATIONS. ALL SWEEPS SHALL BE FACTORY COLORED TO MATCH THE CONDUIT.
5. THE CONDUIT ASSEMBLY SHALL ALWAYS BE INSTALLED IN THE TRENCH OR IN THE BORE SO THAT THE BLUE AND ORANGE CONDUITS ARE ON THE TOP. THE COUPLING ENDS OF THE PIPE SHALL ALWAYS FACE EAST OR NORTH. THE CONTRACTOR SHALL FOLLOW THE ASSEMBLY INSTRUCTIONS AS RECOMMENDED BY THE MANUFACTURER OF THE CONDUIT ASSEMBLY AND USE ONLY MANUFACTURER'S APPROVED SOLVENT.
6. CONDUIT INSTALLED BY OPEN TRENCHING SHALL BE HELD IN PLACE BY SPACERS IN ACCORDANCE WITH THE TECHNICAL SPECIFICATIONS.

NOT TO SCALE

mesa·az

STANDARD FIBER OPTIC TRENCHING AND DUCT BANK INSTALLATION

DETAIL NO. M-66.09.1

REV. 12/09/14

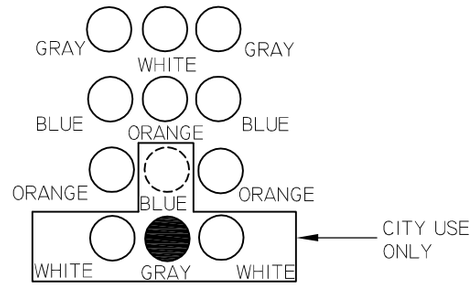

SOLID - FOR TRAFFIC SIGNAL FIBER OPTIC USE
DASHED - FOR ITD FIBER OPTIC USE

E-STREETS - 12

CONDUIT CONFIGURATION AND ALLOCATION

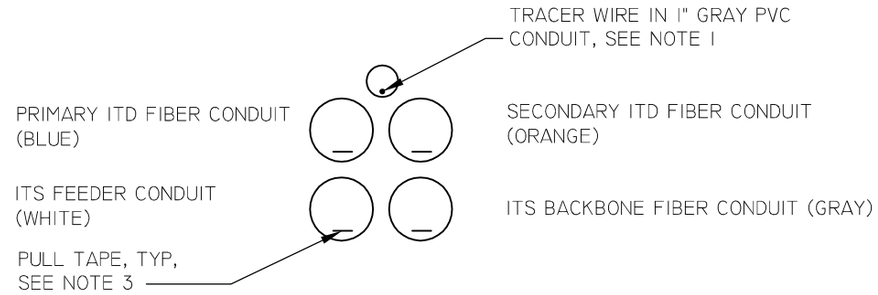

QUAD-DUCT

CONDUIT CONFIGURATION AND ALLOCATION

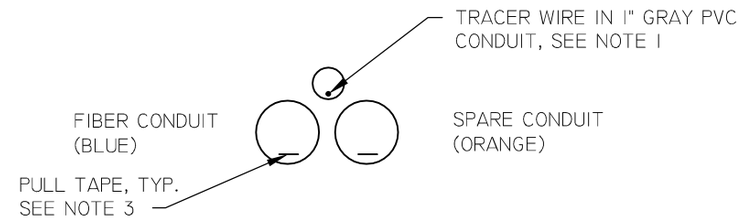

DUAL-DUCT

CONDUIT CONFIGURATION

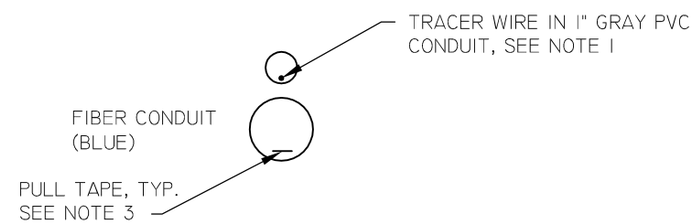

SINGLE-DUCT

CONDUIT CONFIGURATION

NOTE

CONDUIT SIZE SHALL BE AS SHOWN ON PLANS.

NOT TO SCALE

mesa·az

STANDARD FIBER OPTIC DUCT BANK CONFIGURATIONS

DETAIL NO.
M-66.09.2

REV. 12/04/14

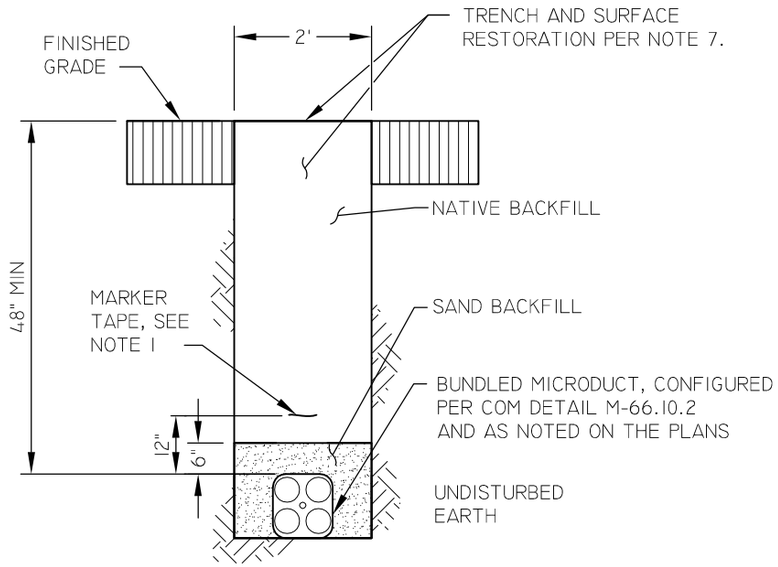

BUNDLED MICRODUCT TRUNKLINE

TRENCHED

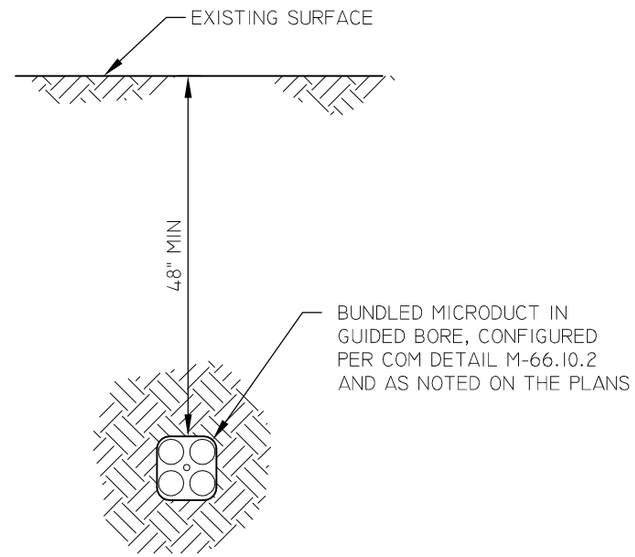

BUNDLED MICRODUCT TRUNKLINE

JACKED, DRILLED OR BORED

NOTES

1. MARKER TAPE SHALL BE IN ACCORDANCE WITH TECHNICAL SPECIFICATIONS AND CENTERED OVER BUNDLED MICRODUCT PER TRENCHED DETAIL. MARKER TAPE SHALL BE INSTALLED AT 12" ABOVE DUCT BANK EXCEPT PER JACKED, DRILLED OR BORED DETAIL.
2. MICRODUCTS FOR FIBER SYSTEM SHALL BE BLOWN OUT WITH COMPRESSED AIR AND HAVE AN HDPE BALL BLOWN THROUGH BEFORE FIBER CABLE IS INSTALLED. A TRAFFIC SIGNAL TECHNICIAN SHALL BE ON SITE DURING THIS PROCEDURE.
3. TRENCH SHALL BE SHADED WITH FILTERED MATERIAL TO A DEPTH OF 6" ABOVE THE BUNDLED MICRODUCT. SAND MAY BE USED. THE REMAINDER OF THE TRENCH MAY BE BACKFILLED WITH ORIGINAL EXCAVATED MATERIAL.
4. MAXIMUM BUNDLED MICRODUCT DEFLECTION ALLOWED SHALL BE 1" PER FOOT.
5. A 12" MINIMUM CLEARANCE FROM OTHER UTILITIES SHALL BE MAINTAINED UNLESS OTHERWISE SPECIFIED BY UTILITY OWNER.
6. THE CONTRACTOR SHALL FOLLOW THE ASSEMBLY INSTRUCTIONS AS RECOMMENDED BY THE MANUFACTURER OF THE BUNDLED MICRODUCT ASSEMBLY, INCLUDING ALL MANUFACTURER'S APPROVED MATERIALS.
7. RESTORE TRENCH SURFACE PER MAG DETAIL 200 WHEN OUTSIDE OF ROADWAY PAVEMENT. FOR ROADWAY PAVEMENT RESTORATION, SEE COM DETAILS M-19.04.1 AND M-19.04.2.

NOT TO SCALE

mesa·az

BUNDLED MICRODUCT CONDUIT INSTALLATION

DETAIL NO.
M-66.10.1

REV. 12/09/14

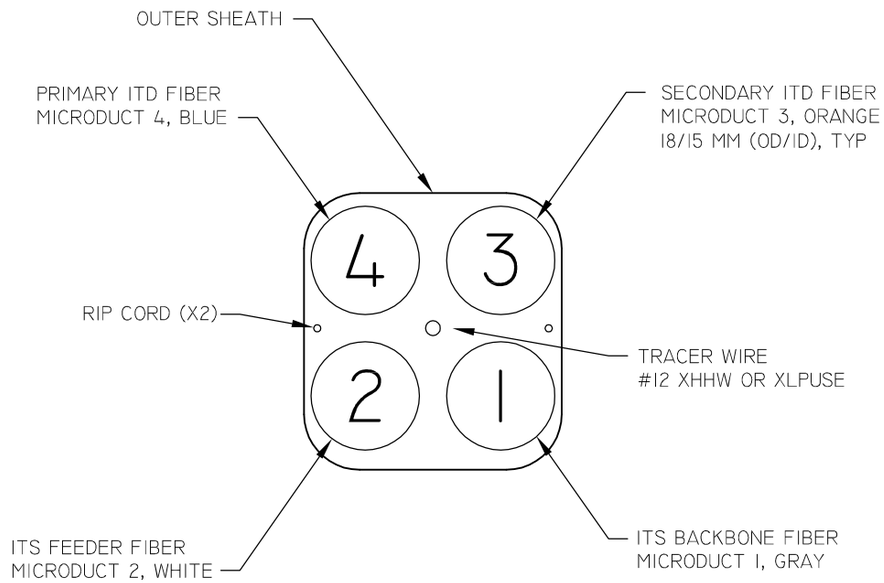

END SECTION

MICRODUCT PATHWAY CONFIGURATION AND ALLOCATION

NOT TO SCALE

mesa·az

STANDARD BUNDLED MICRODUCT CONFIGURATION

DETAIL NO.
M-66.10.2

REV. 01/21/2015

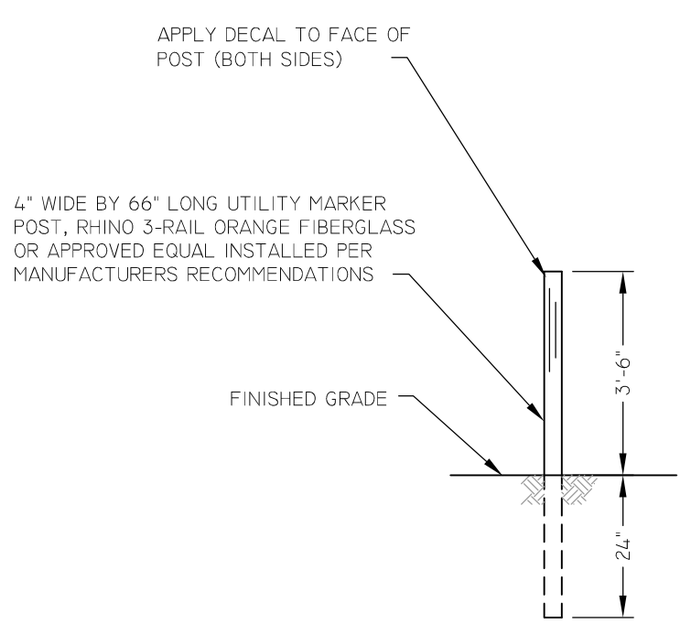

POST

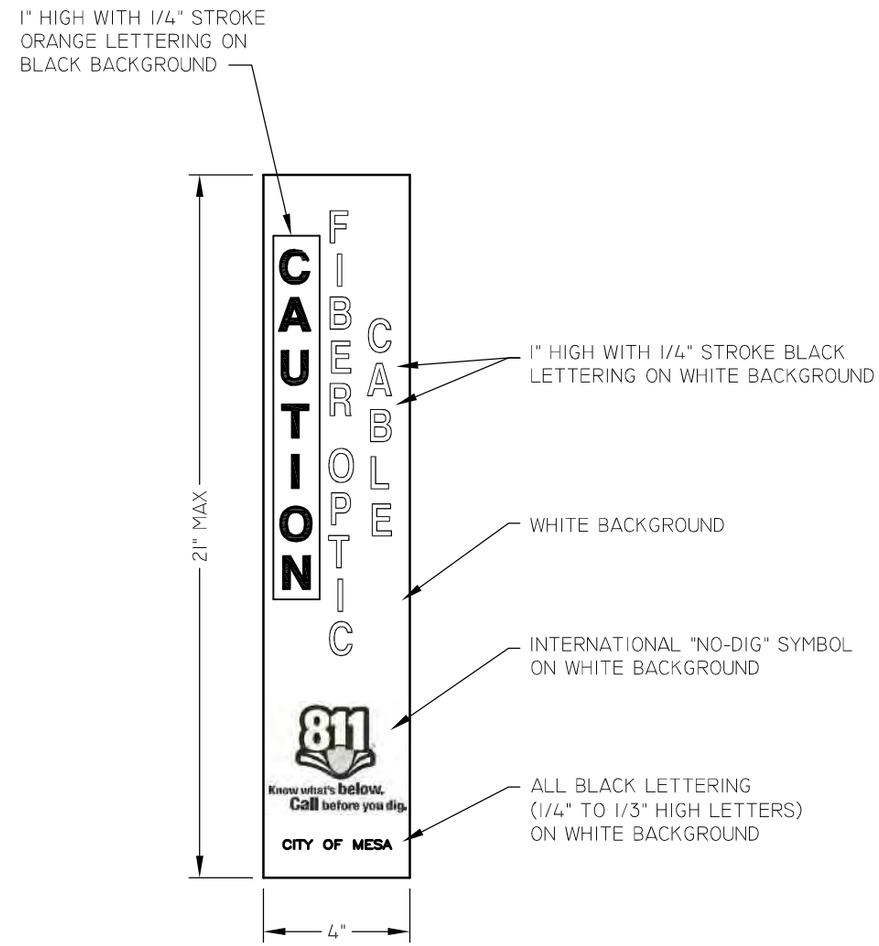

DECAL

NOTES

1. PLACE MARKERS AT A MAXIMUM INTERVAL 400' IN UNDEVELOPED AREAS OR AS SHOWN ON THE PLANS WHICHEVER IS GREATER.
2. MARKERS NOT TYPICALLY REQUIRED IN DEVELOPED AREAS.

NOT TO SCALE

mesa·az

FIBER OPTIC MARKER POST

DETAIL NO.
M-66.11

REV. 01/31/14

TABLE 'A'

JUNCTION STRUCTURE	PULL OUT LENGTH	SPOOL LENGTH
No. 7 PULL BOX	25'	50'
No. 9 PULL BOX	60'	120'
DEEP No. 9 PULL BOX	60'	120'
4' x 4' VAULT	100'	200'
6' x 12' VAULT	100'	200'
EQUIPMENT ROOM TERMINATION	N/A	25'
BUILDING EXTERIOR NEMA BOX	12.5'	25'

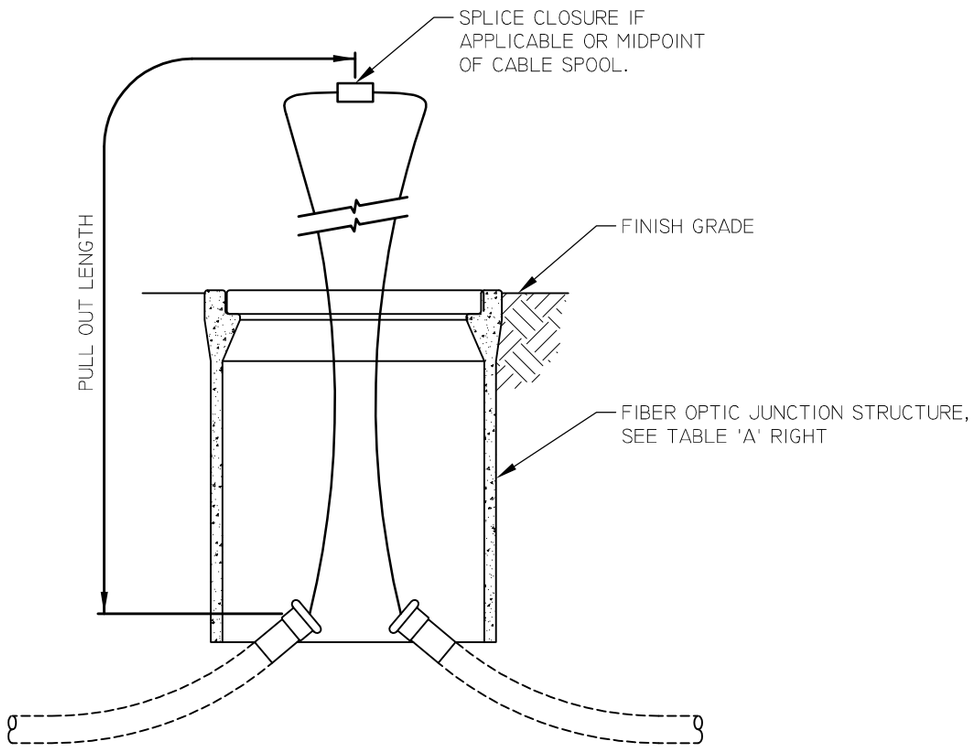

SECTION

NOT TO SCALE

mesa·az

FIBER OPTIC CABLE SPOOL LENGTH PER JUNCTION STRUCTURE

DETAIL NO.
M-66.12

REV. 12/09/14

1. ALL WORKMANSHIP, MATERIAL AND INSTALLATION SHALL COMPLY WITH THE MAG UNIFORM STANDARD DETAILS AND SPECIFICATIONS AS AMENDED BY THE CITY OF MESA, THE CITY OF MESA ENGINEERING DESIGN STANDARDS AND THE LATEST ADOPTED EDITION OF THE NATIONAL ELECTRIC CODE.
2. THE CITY OF MESA REQUIRES AT LEAST ONE IMSA LEVEL I ROADWAY LIGHTING OR TRAFFIC SIGNAL TECHNICIAN ON SITE DURING ALL PHASES OF ANY STREETLIGHT WORK. IT WILL BE THE RESPONSIBILITY OF THE CONTRACTOR TO PROVIDE VERIFICATION OF CURRENT CERTIFICATION. IF A JOB SITE IS INSPECTED AND A CERTIFIED TECHNICIAN IS NOT ON SITE, THE JOB WILL BE SHUT DOWN. THIS SAME REQUIREMENT ALSO APPLIES TO LIGHTING WITHIN PARKING LOTS CON\STRUCTED, OWNED OR MAINTAINED BY THE CITY OF MESA.
3. CONTRACTOR SHALL SUBMIT A LIST CONTAINING NAMES AND QUALIFIED STATUS OF PERSONNEL THAT WILL BE ON THE IMMEDIATE JOB SITE TO THE INSPECTOR PRIOR TO STARTING ANY TYPE OF CONSTRUCTION. ANY CHANGE IN THIS LIST WILL REQUIRE IMMEDIATE NOTIFICATION TO THE INSPECTOR.
4. DURING THE CONSTRUCTION OR WARRANTY PERIOD, IF THE CONTRACTOR FAILS TO OR IS UNABLE TO COMPLY WITHIN TWO (2) WORKING DAYS OF A REQUEST OF THE INSPECTOR OR IF A STREETLIGHT OUTAGE MAKES IT NECESSARY FOR CITY FORCES TO DO WORK THAT IS NORMALLY THE CONTRACTOR'S RESPONSIBILITY, THE CITY WILL BE JUSTIFIED IN BILLING THE CONTRACTOR. A SEPARATE BILLING SHALL COVER EACH INCIDENT REQUIRING WORK BY CITY FORCES. THE AMOUNT OF EACH BILLING SHALL BE EITHER $350.00 OR THE ACTUAL ACCUMULATED CHARGES FOR EMPLOYEES' TIME, MATERIALS, AND EQUIPMENT, WHICHEVER IS GREATER. EMPLOYEES' TIME WILL BE BILLED AT EACH INDIVIDUAL'S HOURLY RATE PLUS THE APPLICABLE CITY OVERHEAD RATE.
5. INSPECTIONS SHALL BE REQUESTED BY THE ELECTRICAL CONTRACTOR IN ACCORDANCE WITH THE FOLLOWING LIST:
   * BEFORE STARTING PROJECT (PRE-JOB INSPECTION).
   * BEFORE FILLING PULL BOX HOLES WITH AGGREGATE.
   * BEFORE BACKFILLING TRENCH AND COVERING CONDUIT.
   * WHEN THE POLE FOUNDATIONS ARE DUG, ANCHOR BOLTS, GROUND WIRE AND GROUND PLATE ARE READY AND IN PLACE, PRIOR TO POURING CONCRETE.
   * BEFORE PULLING WIRE-(SEE NOTE 16 THIS PAGE)
   * BEFORE INSTALLATION OF FIXTURES, AND PHOTOCELL.
   * BEFORE MAKING SPLICES.
   * WHEN PROJECT IS COMPLETED. IF NECESSARY, A LIST OF DISCREPANCIES WILL BE SUBMITTED TO THE CONTRACTOR FOR CORRECTIVE ACTION.

   FAILURE TO HAVE THESE ITEMS INSPECTED AND APPROVED BEFORE PROCEEDING WILL RESULT IN REJECTION OF THE WORK DONE, AND REMOVAL OF ALL SUCH WORK WILL BE REQUIRED.
6. ALL STREETLIGHTS SHALL BE CONNECTED TO THE PERMANENT POWER SUPPLY BY THE AGENCY SUPPLYING POWER. STREETLIGHT SYSTEMS WILL NOT BE ACCEPTED UNTIL THE SYSTEM HAS BEEN ENERGIZED AND FULLY OPERATIONAL FOR A MINIMUM ONE-HOUR TEST PERIOD AT RATED VOLTAGE.
7. WHERE A LIGHTING CONTROL CABINET IS UTILIZED, STREETLIGHT CIRCUITS SHALL BE 240 VOLT. WHERE A CABINET IS NOT USED, STREETLIGHT CIRCUITS SHALL BE 120 VOLT. ALL SERVICES SHALL BE 120/240 VOLT. ALL CONTROL CIRCUITS SHALL BE 120 VOLT.
8. BEFORE DISCONNECTING ANY EXISTING STREETLIGHTS, THE NEW LIGHT SYSTEM SHALL BE WORKING OR TEMPORARY LIGHTING INSTALLED. EXISTING STREETLIGHTS TO BE REMOVED AND NEW STREETLIGHTS SHALL NOT OPERATE AT THE SAME TIME.
9. POLES HAVING MULTIPLE LUMINAIRES SHALL HAVE TWO (2) CONDUCTORS AND ONE (1) BOND WIRE PER LUMINAIRE. THE CONDUCTORS SHALL BE MARKED AS PAIRS AT THE HANDHOLE.
10. ALL UNDERGROUND CIRCUIT CONDUCTORS SHALL BE BLACK, UNLESS OTHERWISE NOTED.
11. WHERE STREETLIGHTS OR CIRCUITS ARE 120 VOLT, ONE CONDUCTOR SHALL BE UN-FUSED AND BE EITHER WHITE OR MARKED WHITE, AS REQUIRED.
12. ALL CIRCUIT CONDUCTORS IN UNDERGROUND CONDUIT SHALL BE XHHW/XHHW-2 INSULATION, MIN. #8-7 STRAND EXCEPT PHOTOCELL CIRCUIT SHALL BE TRAY CABLE (SEE NOTE 13 THIS PAGE)
13. THE TRAY CABLE [PRIORITY PWC02L11 XHHW-2 CONDUCTORS, CPE JACKET, 600VOLTS] FRPC 14/3 (COLORS : BLACK-RED-WHITE) OR EQUIVALENT. RUN UNDERGROUND FROM THE LIGHTING CONTROL CABINET TO THE HANDHOLE OF THE PHOTO CELL LIGHT POLE, SHALL BE CONTINUOS & WITHOUT SPLICES. FROM THE HANDHOLE UP, 3 CONDUCTORS OF #14AWG THHN OR EQUIVALENT WILL BE SPLICED WITH BUTT SPLICES (NO WIRE NUTS) TO THE TERMINAL BLOCK OF THE PHOTOCELL CONTROLLED LUMINAIRE. BUTT SPLICES SHALL BE INSULATED AND THE CRIMP TYPE.
14. MINIMUM DEPTH FROM TOP OF CURB OR ROADWAY TO TOP OF CONDUIT SHALL BE TWENTY-FOUR (24) INCHES. MAXIMUM DEPTH SHALL BE FORTY-EIGHT (48) INCHES, UNLESS OTHERWISE APPROVED.
15. UNDERGROUND WIRING SHALL BE INSTALLED IN SCHEDULE 40 RIGID PVC CONDUIT, UL APPROVED FOR ABOVE GROUND AND UNDERGROUND USE WITH 90 DEGREE C WIRE. WHERE TWENTY-FOUR (24) INCHES COVER IS NOT POSSIBLE, GALVANIZED RIGID STEEL CONDUIT (G.R.S.), SHALL BE USED. G.R.S. CONDUIT SHALL BE DOUBLE WRAPPED WITH 20-MIL TAPE TO SIX (6) INCHES PAST THE THREADED METAL COUPLING. COMPRESSION COUPLINGS ARE NOT ALLOWED. PRIOR APPROVAL IS NEEDED FOR ANY DESIGN USING G.R.S. CONDUIT.
16. ALL CONDUITS SHALL BE BLOWN OUT USING 90-PSI AIR PRESSURE AND TO BE MANDRELLED BEFORE PULLING WIRE.
17. A TWO-PIECE EXPANSION JOINT COUPLING SHALL BE INSTALLED IN PVC CONDUIT RUNS AT INTERVALS NOT TO EXCEED 100 FEET.
18. ALL FORTY-FIVE (45) AND NINETY (90) DEGREE BENDS OF CONDUIT SHALL HAVE A RADIUS OF NOT LESS THAN EIGHTEEN (18) INCHES. FACTORY BENDS ONLY SHALL BE USED.
19. ALL JOINTS BETWEEN PVC CONDUIT, COUPLINGS & FITTING SHALL BE PREPARED WITH PURPLE PRIMER AND CEMENTED TOGETHER WITH GRAY PVC CEMENT.
20. THE CONDUIT LOCATIONS SHOWN ON PLAN ARE DIAGRAMMATIC REPRESENTATIONS ONLY. CONTRACTOR IS TO INSTALL CONDUIT TO AVOID CONFLICTS. THE CONTRACTOR MAY AT HIS OPTION BORE FOR THE PLACEMENT OF CONDUIT PER COM DETAIL M-18. ALL CONDUITS SHALL BE PLACED WITHIN EXISTING RIGHT-OF-WAY UNLESS OTHERWISE APPROVED.
21. STREETLIGHT CONDUITS SHOULD BE INSTALLED PRIOR TO RESIDENTIAL DRIVEWAY INSTALLATIONS. IF STREETLIGHT CONDUIT IS INSTALLED AFTER RESIDENTIAL DRIVEWAY INSTALLATION, CONTRACTOR SHALL BORE CONDUIT UNDER DRIVEWAY. MEANDERING THE CONDUIT BEHIND THE ENTRANCE WILL NOT BE PERMITTED.
22. BACKFILL REQUIREMENTS FOR ALL TRENCHES SHALL CONFORM TO ARTICLE 300 OF THE N.E.C., SECTION 601 OF THE UNIFORM STANDARD SPECIFICATIONS, AND M-19.04 OF THE MESA STANDARD DETAILS FOR STREET TRENCH BACKFILL AND PAVEMENT REPLACEMENT.
23. WITH THE EXCEPTION OF DETACHED SIDEWALKS, PULL BOXES SHALL BE INSTALLED (SEE COM DETAILS M-74.01 AND M-74.02) FIVE (5) FEET (CENTER TO CENTER) BETWEEN STREETLIGHT POLES AND PULL BOXES.
24. PHOTOCELL RECEPTACLE SHALL BE POSITIONED ON LUMINAIRE SO THAT WHEN INSTALLED THE PHOTOCELL WILL FACE NORTH.
25. ALL SHORTING CAPS TO BE LOW PROFILE TYPE. NO HIGHER THAN 1 1/2" ABOVE SOCKET.
26. ALL PHOTO CELL CIRCUIT CONDUIT MUST BE 1-1/2" OR LARGER (TO INCLUDE CONDUIT STUBBING UP AT PHOTO CELL LIGHT POLE).
27. ALL RESIDENTIAL AND COLLECTOR CONDUIT SHALL BE 1 1/2" CONDUIT
28. ALL ARTERIAL CONDUIT SHALL BE 2", 1 1/2" CONDUIT FROM PULL BOX TO POLE.
29. FUSING FOR HPS LUMINAIRE SHALL BE 5AMP FNM. LED LUMINAIRE TO BE FUSED ACCORDING TO WATTAGE USAGE.
30. ALL NON GALVANIZED POLES SHALL HAVE INTERIOR POLE COATED WITH AMERCOAT 78HB OR APPROVED EQUIVALENT FROM BASE TO TOP OF HAND HOLE. (5MILS)

mesa·az

STREETLIGHT WORK PROCEDURES

DETAIL NO.
M-70

REV. 03/24/2015

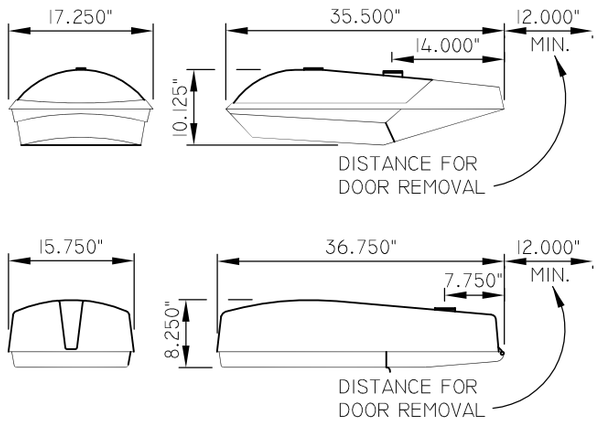

TYPE 1 LARGE COBRA HEAD LUMINAIRE

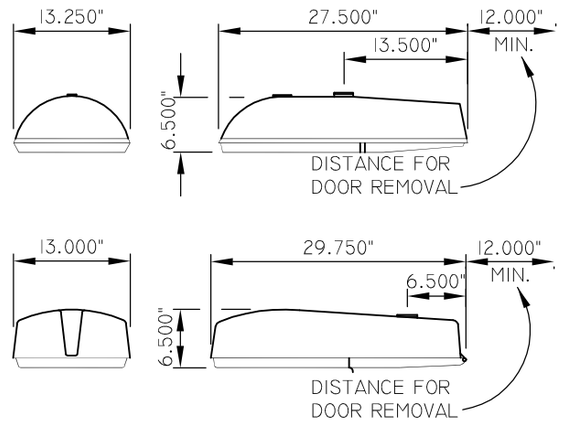

TYPE 2 SMALL COBRA HEAD LUMINAIRE

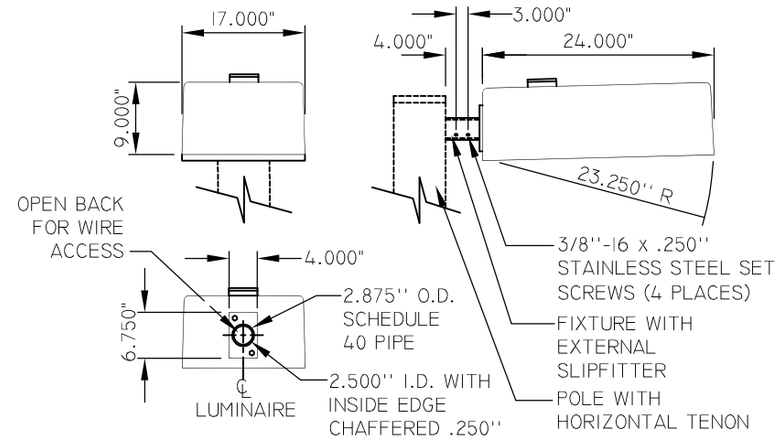

TYPE 3 SHOE BOX LUMINAIRE

TYPE 1, AND TYPE 2 GENERAL DESCRIPTION

TO FURNISH A STREETLIGHT LUMINAIRE IN ACCORDANCE WITH THE REQUIREMENTS OF THIS SPECIFICATION AND DESIGNED FOR ROADWAY LIGHTING. THE BALLAST FOR TYPE 1 SHALL BE A BUILT IN MULTIPLE BALLAST FOR USE WITH A 150 WATT 55 VOLT, 200 WATT 100 VOLT, 250 WATT 100 VOLT, 310 WATT 100 VOLT, 400 WATT 100 VOLT HIGH PRESSURE SODIUM LAMP WITH GENERAL SHAPE AS SHOWN. THE BALLAST FOR TYPE 2 SHALL BE A BUILT IN MULTIPLE BALLAST FOR USE WITH A 100 WATT 55 VOLT, 150 WATT 55 VOLT HIGH PRESSURE SODIUM LAMP WITH THE GENERAL SHAPE AS SHOWN.

THE HOUSING FOR TYPE 1, AND TYPE 2 SHALL BE PRECISION ALUMINUM DIE CAST WITH AN ACRYLIC BASE ELECTROCOAT FINISH (SEE DATA TABLE FOR COLOR). THE HOUSING SHALL HAVE AN INTEGRAL SLIPFITTER FOR 1 1/4'' TO 2'' PIPE AND SHALL CONTAIN A PIPE STOP. CLAMPING AND LEVELING OF THE UNIT SHALL BE ACCESSIBLE FROM WITHIN AND WITHOUT THE UNIT. EACH HOUSING SHALL HAVE THE LAMP WATTAGE NUMBERS ADHERED TO THE BOTTOM OF THE LUMINAIRE SO THAT IT MAY BE SEEN PLAINLY FROM THE ROADWAY.

TYPE 3 GENERAL DESCRIPTION

TO FURNISH A STREETLIGHT LUMINAIRE IN ACCORDANCE WITH THE REQUIREMENTS OF THIS SPECIFICATION AND DESIGNED FOR ROADWAY LIGHTING. THE BALLAST FOR TYPE 3 SHALL BE A BUILT IN MULTIPLE BALLAST FOR USE WITH A 100 WATT 55 VOLT, 150 WATT 55 VOLT, 200 WATT 100 VOLT, 250 WATT 100 VOLT, 310 WATT 100 VOLT, 400 WATT 100 VOLT HIGH PRESSURE SODIUM LAMP WITH GENERAL SHAPE AS SHOWN.

THE HOUSING FOR TYPE 3 SHALL BE PRECISION ALUMINUM DIE CAST WITH A POWDER COAT FINISH (SEE DATA TABLE FOR COLOR). ATTACHMENT AND LEVELING OF THE UNIT SHALL BE ACCOMPLISHED BY FOUR SET SCREWS WHICH SHALL BE ACCESSIBLE OUTSIDE OF THE UNIT, ON THE EXTERNAL SLIPFITTER. EACH HOUSING SHALL HAVE THE LAMP WATTAGE NUMBERS ADHERED TO THE BOTTOM OF THE LUMINAIRE SO THAT IT MAY BE SEEN PLAINLY FROM THE ROADWAY.

NOT TO SCALE

mesa·az

STREETLIGHT LUMINAIRE SPECIFICATION

DETAIL NO.
M-70.01.1

REV. 01/31/2014

REQUIREMENTS

A. HOUSING
1. THE HOUSING SHALL BE DESIGNED FOR 90 DEGREE LIGHT CUTOFF.
2. TYPE 1, AND TYPE 2 HOUSING SHALL BE OF TWO DOOR WITH ONE DOOR ACCESSING THE OPTICAL ASSEMBLY AND ONE DOOR ACCESSING THE BALLAST ASSEMBLY.
3. TYPE 3 HOUSING SHALL BE OF ONE DOOR WITH ACCESS TO BOTH THE BALLAST AND OPTICAL COMPARTMENTS.
4. THE HOUSING SHALL BE ABLE TO WITHSTAND 1000 HOUR SALT SPRAY TEST ASTM 117.
5. NO REARRANGEMENT OF PARTS OR SEPARATE PARTS SHALL BE REQUIRED WHEN MOUNTING THE UNIT.

B. LAMP SOCKET
1. THE LAMP SOCKET SHALL BE MOGUL MULTIPLE PORCELAIN ENCLOSED. THE RATING OF THE SOCKET SHALL EXCEED THE LAMP STARTING VOLTAGE
2. THE SCREW SHELL OF THE SOCKET SHALL CONTAIN INTEGRAL LAMP GRIPS TO ASSURE ELECTRICAL CONTACT UNDER CONDITIONS OF NORMAL VIBRATION.
3. THE SOCKET SHALL BE ADJUSTABLE IN BOTH A HORIZONTAL AND VERTICAL DIRECTION.
4. THE SOCKET SHALL CONFORM WITH TDJ-147 SPECIFICATION OF EEI STANDARDS.

C. DOOR GLASS
1. THE DOOR GLASS SHALL BE HEAT AND IMPACT RESISTANT FREE FROM IMPERFECTIONS AND STRIATIONS.

D. DOOR GLASS HOLDER-DOOR
1. THE DOOR GLASS HOLDER-DOOR SHALL BE SECURED AND HINGED TO THE UPPER HOUSING AT ONE END AND LATCHED TO THE UPPER HOUSING AT THE OPPOSITE END.

E. REFLECTOR
1. THE REFLECTOR SHALL BE OF DRAWN ALUMINUM AND HAVE A HIGHLY POLISHED ANODIC SURFACE.
2. THE REFLECTOR SHALL BE RIGIDLY MOUNTED WITHIN THE HOUSING TO ASSURE A FIRM SURFACE FOR PROPER SEALING WHEN THE UNIT IS CLOSED.
3. GASKETS BETWEEN THE REFLECTOR AND GLASSWARE SHALL EFFECTIVELY SEAL THE OPTICAL ASSEMBLY FROM CONTAMINATES AND ALLOW FOR PROPER BREATHING OF THE ASSEMBLY THROUGH AN ACTIVATED CHARCOAL FILTER.
4. THE REFLECTOR DESIGN SHALL BE SUCH THAT BY PROPER POSITIONING OF THE LAMP SOCKET WILL PRODUCE AN IES TYPE II OR TYPE III LIGHTING DISTRIBUTION PATTERN.

F. TERMINAL BOARD
1. THE TERMINAL BOARD SHALL BE MOLDED OF FIBERGLASS REINFORCED POLYESTER WITH PROTECTIVE BARRIERS BETWEEN EACH TERMINAL.
2. THE TERMINAL SCREWS SHALL BE OF THE CAPTIVE TYPE AND EACH SCREW SHALL BE EQUIPPED WITH WIRE GRIPS WHICH WILL AUTOMATICALLY BE RAISED AND LOWERED AS THE TERMINAL SCREW IS OPERATED.
3. THE TERMINALS SHALL BE CAPABLE OF ACCEPTING UP TO #6 AWG CONDUCTOR.
4. THE TERMINAL BOARD SHALL HAVE THREE TERMINALS, ONE OF THESE TERMINALS SHALL BE FOR THE SYSTEM GROUND AND SHALL BE CONNECTED TO THE LUMINAIRE HOUSING
5. WHEN A PHOTO CELL RECEPTACLE IS REQUIRED THREE ADDITIONAL TERMINALS SHALL BE PROVIDED FOR EXCLUSIVE PHOTO CELL OPERATIONS.
6. ALL UNITS ARE TO BE PREWIRED TO A SINGLE TERMINAL BOARD REQUIRING ONLY CUSTOMER CONNECTIONS TO CLEARLY IDENTIFIED TERMINALS.

G. HARDWARE
1. ALL HARDWARE SHALL BE OF NON-CORROSIVE OR SUITABLY PROTECTED METAL TO PREVENT ELECTROLYTIC ACTION BY CONTACT WITH ALUMINUM. COMPONENTS SHALL BE SECURED TO THE LUMINAIRE FRAME WITH STAINLESS STEEL HARDWARE OF THE AISI 300 SERIES CHROME-NICKLE GRADE.

H. BALLAST
1. THE BALLAST SHALL BE OF THE BUILT IN DESIGN, MOUNTED WITHIN THE LUMINAIRE IN SUCH A MANNER THAT IT CAN BE EASILY DISCONNECTED BY SIMPLE DISCONNECTING PLUGS.
2. ON THE TYPE 1, AND TYPE 2 LUMINAIRES THE BALLAST AND OTHER AUXILIARY EQUIPMENT SHALL BE MOUNTED ON A SEPARABLE DIE CAST DOOR OF THE LUMINAIRE, TO FACILITATE REPLACEMENT WITHOUT THE USE OF TOOLS.
3. ON A TYPE 3 LUMINAIRE THE BALLAST AND OTHER AUXILIARY EQUIPMENT SHALL BE MOUNTED IN A REMOVABLE PANEL OR TRAY WITHIN THE LUMINAIRE, TO FACILITATE REPLACEMENT WITHOUT THE USE OF TOOLS.
4. THE HIGH PRESSURE SODIUM BALLAST SHALL BE OF THE THREE COIL ISOLATED LAG
TYPE REGULATOR DESIGN MULTIPLE VOLTAGE RATED (SEE DATA TABLE) FOR LINE VOLTAGE.
5. THE BALLAST CORE LAMINATION SHALL BE OF HIGH QUALITY ELECTRICAL GRADE STEEL WELDED TOGETHER TO MINIMIZE NOISE AND ASSURE TROUBLE FREE OPERATION OVER THE LIFE OF THE LUMINAIRE.
6. THE BALLAST COILS SHALL BE PRECISION WOUND ON FORMED INSULATING BOBBINS AND TERMINALS SHALL BE OF THE PUSH ON TYPE CONNECTIONS.
7. THE COMPONENT TO PROVIDE THE HIGH STARTING VOLTAGE REQUIRED BY THE HIGH PRESSURE SODIUM LAMP SHALL BE MOUNTED ON A NON ENCAPSULATED PLUG-IN MODULE WHICH SHALL BE EASILY ACCESSIBLE WITHOUT DISTURBING OTHER COMPONENTS OF THE BALLAST ASSEMBLY.
8. THE BALLAST SHALL BE CAPABLE OF STARTING AND OPERATING A (SEE DATA TABLE) WATT HIGH PRESSURE SODIUM LAMP FROM A NOMINAL (SEE DATA TABLE) VOLTAGE 60HZ POWER SOURCE WITHIN THE LIMITS SPECIFIED BY THE LAMP MANUFACTURER. THE BALLAST INCLUDING STARTING AID, MUST PROTECT ITSELF AGAINST NORMAL LAMP FAILURE MODES. THE BALLAST SHALL BE CAPABLE OF OPERATION WITH LAMP IN AN OPEN OR SHORT CIRCUIT CONDITION FOR SIX MONTHS WITHOUT SIGNIFICANT LOSS OF BALLAST LIFE.

I. INSPECTION
ALL INSTALLATIONS SHALL BE INSPECTED AND APPROVED BY AN IMSA CERTIFIED INSPECTOR.

NOT TO SCALE

mesa·az

STREETLIGHT LUMINAIRE SPECIFICATION

DETAIL NO.
M-70.01.2

REV. 02/18/2015

DATA TABLE

LUMIN. #	LAMP WATTAGE	LAMP TYPE	LAMP VOLTAGE	LINE VOLTAGE	I.E.S. DIST. TYPE	P.C. RECPT.	HOUSING TYPE	COLOR
L-097	70	H.P.S.	55	120x240V.	II	YES	2	GRAY
L-098	70	H.P.S.	55	120x240V.	II	NO	2	GRAY
L-099	70	H.P.S.	55	120x240V.	II	YES	3	BRONZE
L-100	70	H.P.S.	55	120x240V.	II	N0	3	BRONZE
L-101	100	H.P.S.	55	120x240V.	II	YES	2	GRAY
L-102	100	H.P.S.	55	120x240V.	II	NO	2	GRAY
L-103	100	H.P.S.	55	120x240V.	III	YES	3	BRONZE
L-104	100	H.P.S.	55	120x240V.	III	NO	3	BRONZE
L-105	150	H.P.S.	55	120x240V.	II	YES	2	GRAY
L-106	150	H.P.S.	55	120x240V.	II	NO	2	GRAY
L-109	150	H.P.S.	55	120x240V.	III	YES	1	GRAY
L-110	150	H.P.S.	55	120x240V.	III	NO	1	GRAY
L-111	150	H.P.S.	55	120x240V.	III	YES	3	BRONZE
L-112	150	H.P.S.	55	120x240V.	III	NO	3	BRONZE
L-113.1	150	H.P.S.	55	208V.	III	NO	3	CREOLE
L-113.2	150	H.P.S.	55	277V.	III	NO	3	CREOLE
L-114	200	H.P.S.	100	120x240V.	III	YES	1	GRAY
L-115	200	H.P.S.	100	120x240V.	III	NO	1	GRAY
L-116	200	H.P.S.	100	120x240V.	III	YES	3	BRONZE
L-117	200	H.P.S.	100	120x240V.	III	NO	3	BRONZE
L-118	250	H.P.S.	100	120x240V.	III	YES	1	GRAY
L-119	250	H.P.S.	100	120x240V.	III	NO	1	GRAY
L-120	250	H.P.S.	100	120x240V.	III	YES	3	BRONZE
L-121	250	H.P.S.	100	120x240V.	III	NO	3	BRONZE
L-124	250	H.P.S.	100	120x240V.	III	NO	3	CREOLE
L-125	250	H.P.S.	100	120x240V.	III	YES	1	GREEN
L-126	250	H.P.S.	100	120x240V.	III	NO	1	GREEN
L-127	250	H.P.S.	100	120x208x 240x277V.	III	YES	1	GRAY
L-122	310	H.P.S.	100	120x240V.	III	YES	1	GREEN
L-123	310	H.P.S.	100	120x240V.	III	NO	1	GREEN
L-128	310	H.P.S.	100	120x240V.	III	YES	1	GRAY
L-129	310	H.P.S.	100	120x240V.	III	NO	1	GRAY
L-130	310	H.P.S.	100	120x240V.	III	YES	3	BRONZE
L-131	310	H.P.S.	100	120x240V.	III	NO	3	BRONZE
L-132	400	H.P.S.	100	120x240V.	III	YES	1	GRAY
L-133	400	H.P.S.	100	120x240V.	III	NO	1	GRAY
L-134	400	H.P.S.	100	120x240V.	III	YES	3	BRONZE
L-135	400	H.P.S.	100	120x240V.	III	NO	3	BRONZE

*COLORS

GRAY - SHALL BE AN ACRYLIC BASE ELECTROCOAT ASA 70 GRAY.

BRONZE - SHALL BE A POWDER COATED GE DARK BRONZE.

GREEN - SHALL BE (SERIES 73 ENDURASHIELD III BY TNEMEC) ECHO GREEN FOR MAIN STREET ONLY.

CREOLE - SHALL BE (SERIES 73 ENDURASHIELD III BY TNEMEC) CREOLE FOR MESA TOWN CENTER ONLY.

*OR APPROVED EQUAL

NOT TO SCALE

mesa·az

STREETLIGHT LUMINAIRE SPECIFICATION

DETAIL NO.
M-70.01.3

REV. 01/31/2014

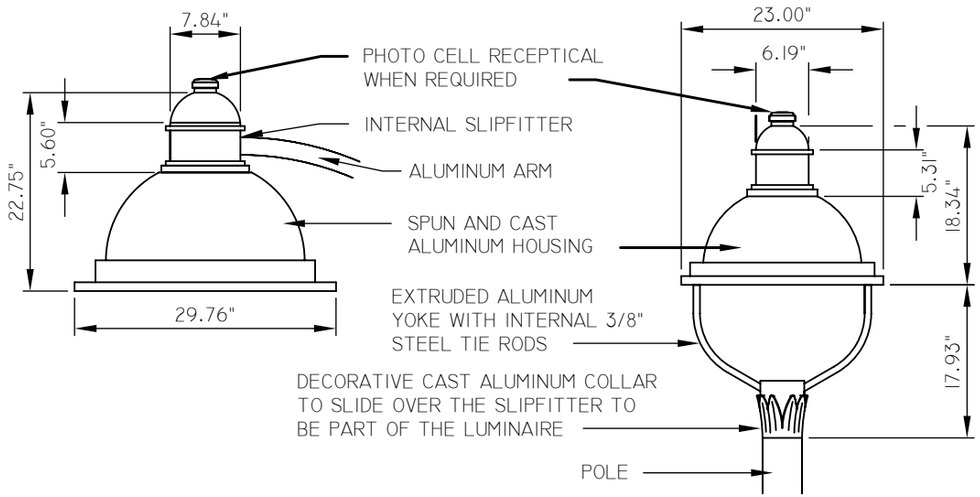

ARM MOUNTED LUMINAIRE

POLE TOP MOUNTED LUMINAIRE

NOTE

TO FURNISH A STREETLIGHT LUMINAIRE IN ACCORDANCE WITH THE REQUIREMENTS OF THIS SPECIFICATION AND DESIGNED FOR ROADWAY LIGHTING WITH GENERAL SHAPE AS SHOWN.

DATA TABLE

LUMIN. #	LAMP WATTAGE	LAMP TYPE	LAMP VOLTAGE	LINE VOLTAGE	I.E.S. DIST. TYPE	P.C. RECPT.
ARM MOUNTED LUMINAIRE						
L-201	100	H.P.S.	55	120x240V.	III	YES
L-202	100	H.P.S.	55	120x240V.	III	NO
L-203	150	H.P.S.	55	120x240V.	III	YES
L-204	150	H.P.S.	55	120x240V.	III	NO
L-205	200	H.P.S.	100	120x240V.	III	YES
L-206	200	H.P.S.	100	120x240V.	III	NO
L-207	250	H.P.S.	100	120x240V.	III	YES
L-208	250	H.P.S.	100	120x240V.	III	NO
L-209	310	H.P.S.	100	120x240V.	III	YES
L-210	310	H.P.S.	100	120x240V.	III	NO
L-211	400	H.P.S.	100	120x240V.	III	YES
L-212	400	H.P.S.	100	120x240V.	III	NO
POLE TOP LUMINAIRE						
L-213	100	H.P.S.	100	120x240V.	V	YES
L-214	100	H.P.S.	100	120x240V.	V	NO

NOT TO SCALE

mesa·az

TOWN CENTER DECORATIVE

DETAIL NO.
M-70.02.1

REV. 01/31/2014

REQUIREMENTS

A. HOUSING

1. THE HOUSING SHALL BE ONE PIECE EXTRUDED ALUMINUM WITH THE CANOPY BEING SPUN ALUMINUM.
2. THE HOUSING SHALL BE DESIGNED FOR 90 DEGREE LIGHT CUTOFF.
3. THE HOUSING SHALL BE OF ONE DOOR WITH ACCESS TO BOTH THE OPTICAL AND ELECTRIC SYSTEMS. THE SYSTEMS SHALL BE HINGED AND REMOVABLE FOR EASE OF SERVICING.
4. THE HOUSING SHALL BE ABLE TO WITHSTAND 1000 HOUR SALT SPRAY TEST ASTM 117.
5. NO REARRANGEMENT OF PARTS OR SEPARATE PARTS SHALL BE REQUIRED WHEN MOUNTING THE UNIT.
6. ATTACHMENT AND LEVELING OF THE UNIT SHALL BE ACCOMPLISHED BY THE SLIPFITTER.

B. ARM MOUNTED LUMINAIRE

1. THE HOUSING SHALL HAVE AN INTERGRAL SLIPFITTER FOR 2'' PIPE AND SHALL CONTAIN A PIPE STOP. CLAMPING AND LEVELING OF THE UNIT SHALL BE ACCESSIBLE FROM WITHIN THE UNIT.
2. SINGLE ARM AND TWIN ARMS ARE TO MOUNT TO A 3'' O.D. x 6'' POST TOP TENON.

C. POLE TOP MOUNTED LUMINAIRE

1. THE ALUMINUM SLIPFITTER SHALL SUPPORT THE HOUSING AND CANOPY WITH AN EXTRUDED ALUMINUM YOKE WITH INTERNAL 3/8'' STEEL TIE RODS.
2. THE SLIPFITTER SHALL FIT A POLE WITH A TOP TENON 2.88'' O.D. x 5.00''
3. ATTACHMENT AND LEVELING OF THE UNIT SHALL BE ACCOMPLISHED BY FOUR 3/8'' STAINLESS STEEL ALLEN SETSCREWS.

D. FINISH

1. A PRIMER COAT OF TNEMEC SERIES 66 HI BUILD EPOXOLINE OR APPROVED EQUAL SHALL BE APPLIED TO A THICKNESS OF 3 DRY MILS.
2. THE FINISH COATING SHALL BE TNEMEC SERIES 73 ENDURA SHIELD III OR APPROVED EQUAL, APPLIED TO A MINIMUM THICKNESS OF 3 DRY MILLS.
3. THE FINISH COLOR SHALL BE HUNTER GREEN, TNEMEC COLOR NUMBER PL20.
4. THE FINAL COATING SHALL BE TNEMEC SERIES 76 ENDURA CLEAR OR APPROVED EQUAL, APPLIED TO A MINIMUM THICKNESS OF 1.5 DRY MILLS.

E. LAMP SOCKET

1. THE LAMP SOCKET SHALL BE MOGUL MULTIPLE PORCELAIN ENCLOSED. THE RATING OF THE SOCKET SHALL EXCEED THE LAMP STARTING VOLTAGE.
2. THE SCREW SHELL OF THE SOCKET SHALL CONTAIN INTEGRAL LAMP GRIPS TO ASSURE ELECTRICAL CONTACT UNDER CONDITIONS OF NORMAL VIBRATION.
3. THE SOCKET SHALL CONFORM WITH TDJ-147 SPECIFICATION OF EEI STANDARDS.
4. THE SOCKET SHALL BE IN A HORIZONTAL POSITION.

F. DOOR GLASS

1. THE DOOR GLASS SHALL BE HEAT AND IMPACT RESISTANT AND FREE FROM IMPERFECTIONS AND STRIATIONS.

G. DOOR GLASS HOLDER-DOOR

1. THE DOOR GLASS HOLDER-DOOR SHALL BE SECURED TO THE HOUSING AT ONE END, AND HINGED TO THE HOUSING AT THE OPPOSITE END.

H. REFLECTOR

1. THE REFLECTOR SHALL BE HYDROFORMED ALUMINUM AND HAVE A HIGHLY POLISHED ANODIC SURFACE.
2. THE REFLECTOR SHALL BE RIGIDLY MOUNTED WITHIN THE HOUSING TO ASSURE A FIRM SURFACE FOR PROPER SEALING WHEN THE UNIT IS CLOSED.
3. GASKETS BETWEEN THE REFLECTOR AND GLASSWARE SHALL EFFECTIVELY SEAL THE OPTICAL ASSEMBLY FROM CONTAMINATES AND ALLOW FOR PROPER BREATHING OF THE ASSEMBLY THROUGH AN ACTIVATED CHARCOAL FILTER.
4. THE REFLECTOR DESIGN SHALL BE SUCH THAT PROPER POSITIONING OF THE LAMP SOCKET WILL PRODUCE AN IES TYPE V DISTRIBUTION PATTERN FOR THE POLE TOP LUMINAIRE, AND TYPE III DISTRIBUTION PATTERN FOR THE ARM MOUNTED LUMINAIRE.

I. TERMINAL BOARD

1. THE TERMINAL BOARD SHALL BE MOLDED OF FIBERGLASS REINFORCED POLYESTER WITH PROTECTIVE BARRIERS BETWEEN EACH TERMINAL.
2. THE TERMINAL SCREWS SHALL BE OF THE CAPTIVE TYPE AND EACH SCREW SHALL BE EQUIPPED WITH WIRE GRIPS WHICH WILL AUTOMATICALLY BE RAISED AND LOWERED AS THE TERMINAL SCREW IS OPERATED.
3. THE TERMINALS SHALL BE CAPABLE OF ACCEPTING UP TO #6 AWG CONDUCTOR.
4. THE TERMINAL BOARD SHALL HAVE THREE TERMINALS, ONE OF THESE TERMINALS SHALL BE FOR THE SYSTEMS GROUND AND SHALL BE CONNECTED TO THE FIXTURE HOUSING
5. WHEN A PHOTO CELL RECEPTACLE IS REQUIRED THREE ADDITIONAL TERMINALS SHALL BE PROVIDED FOR EXCLUSIVE PHOTO CELL OPERATIONS.
6. ALL UNITS ARE TO BE PREWIRED TO A SINGLE TERMINAL BOARD REQUIRING ONLY CUSTOMER CONNECTIONS TO CLEARLY IDENTIFIED TERMINALS.

J. HARDWARE

1. ALL HARDWARE SHALL BE OF NON-CORROSIVE OR SUITABLY PROTECTED METAL. WHEN NECESSARY TO PREVENT ELECTROLYTIC ACTION BY CONTACT WITH ALUMINUM COMPONENTS SHALL BE SECURED TO THE LUMINAIRE FRAME WITH STAINLESS STEEL HARDWARE OF THE AISI 300 SERIES CHROME-NICKEL GRADE.

K. BALLAST

1. THE BALLAST SHALL BE OF THE BUILT IN DESIGN MOUNTED WITHIN THE LUMINAIRE IN SUCH A MANNER THAT IT CAN EASILY BE DISCONNECTED BY SIMPLE DISCONNECTING PLUGS.
2. THE BALLAST AND OTHER AUXILIARY EQUIPMENT SHALL BE MOUNTED IN A REMOVABLE PANEL.
3. THE HIGH PRESSURE SODIUM BALLAST SHALL BE OF THE THREE COIL ISOLATED LAG TYPE REGULATOR DESIGN RATED 120x240 FOR LINE VOLTAGE.
4. THE BALLAST CORE LAMINATION SHALL BE OF HIGH QUALITY ELECTRICAL GRADE STEEL WELDED TOGETHER TO MINIMIZE NOISE AND ASSURE TROUBLE FREE OPERATION OVER THE LIFE OF THE LUMINAIRE.
5. THE BALLAST COILS SHALL BE PRECISION WOUND ON FORMED INSULATING BOBBINS AND TERMINALS SHALL BE OF THE PUSH ON TYPE CONNECTIONS.
6. THE COMPONENT TO PROVIDE THE HIGH STARTING VOLTAGE REQUIRED BY THE HIGH PRESSURE SODIUM LAMP SHALL BE PLUG-IN MODULE.
7. THE BALLAST SHALL BE CAPABLE OF STARTING AND OPERATING A 100-400 WATT HIGH PRESSURE SODIUM LAMP FROM A NOMINAL 240 VOLT 60HZ POWER SOURCE WITHIN THE LIMITS SPECIFIED BY THE LAMP MANUFACTURER. THE BALLAST INCLUDING STARTING AID, MUST PROTECT ITSELF AGAINST NORMAL LAMP FAILURE MODES. THE BALLAST SHALL BE CAPABLE OF OPERATION WITH LAMP IN AN OPEN OR SHORT CIRCUIT CONDITION FOR SIX MONTHS WITHOUT SIGNIFICANT LOSS OF BALLAST LIFE.

L. INSPECTION

1. ALL INSTALLATIONS SHALL BE INSPECTED AND APPROVED BY AN IMSA CERTIFIED INSPECTOR.

mesa·az

TOWN CENTER DECORATIVE

DETAIL NO.
M-70.02.2

REV. 02/18/2015

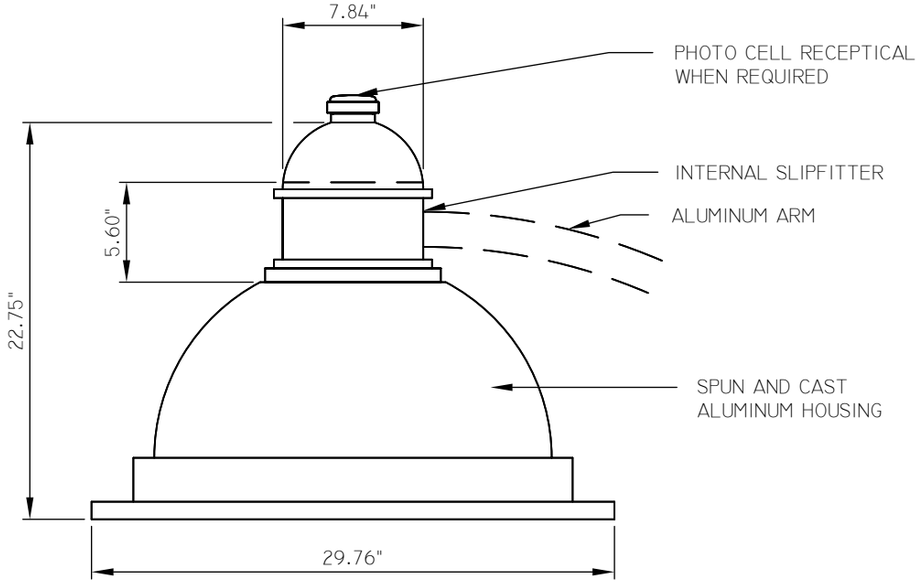

L-215 & L-216 ARM MOUNTED LUMINAIRE

NOTE

TO FURNISH A STREETLIGHT LUMINAIRE IN ACCORDANCE WITH THE REQUIREMENTS OF THIS SPECIFICATION AND DESIGNED FOR ROADWAY LIGHTING WITH GENERAL SHAPE AS SHOWN.

DATA TABLE

LUMIN. #	LAMP WATTAGE	LAMP TYPE	LAMP VOLTAGE	LINE VOLTAGE	I.E.S. DIST. TYPE	P.C. RECPT.
ARM MOUNTED LUMINAIRE						
L-215	400	MH	.	120x240V.	III	YES
L-216	400	MH	.	120x240V.	III	NO

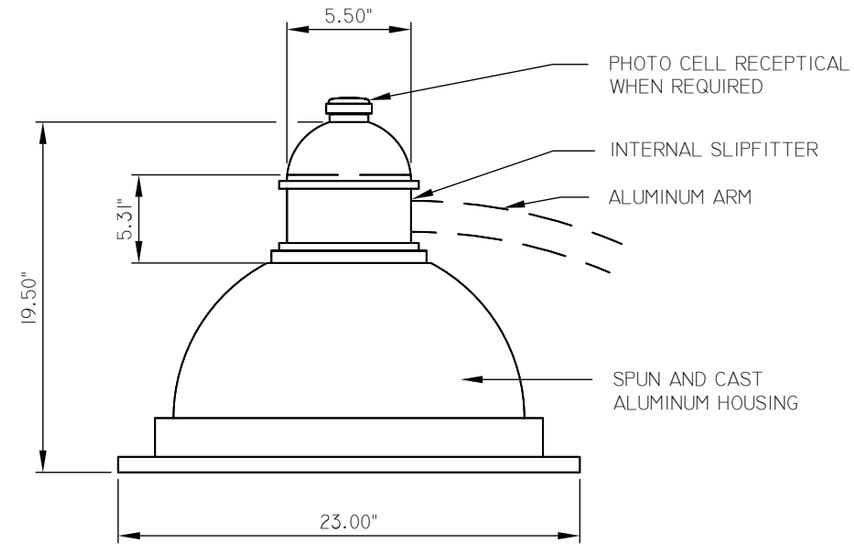

L-217 & L-218 ARM MOUNTED LUMINAIRE

NOTE

TO FURNISH A PEDESTRIAN LUMINAIRE IN ACCORDANCE WITH THE REQUIREMENTS OF THIS SPECIFICATION AND DESIGNED FOR WALKWAY LIGHTING WITH GENERAL SHAPE AS SHOWN.

DATA TABLE

LUMIN. #	LAMP WATTAGE	LAMP TYPE	LAMP VOLTAGE	LINE VOLTAGE	I.E.S. DIST. TYPE	P.C. RECPT.
ARM MOUNTED LUMINAIRE						
L-217	70	MH	.	120, 240 240, 277	V	YES
L-218	70	MH	.	120, 208 240, 277	V	NO

NOT TO SCALE

mesa·az

TOWN CENTER DECORATIVE
STREETLIGHT LUMINAIRE SPECIFICATION

DETAIL NO.
M-70.03.1

REV. 01/31/2014

REQUIREMENTS

A. HOUSING
1. THE HOUSING SHALL BE ONE PIECE EXTRUDED ALUMINUM WITH THE CANOPY BEING SPUN ALUMINUM.
2. THE HOUSING SHALL BE DESIGNED FOR 90 DEGREE LIGHT CUTOFF.
3. THE HOUSING SHALL BE OF ONE DOOR WITH ACCESS TO BOTH THE OPTICAL AND ELECTRIC SYSTEMS. THE SYSTEMS SHALL BE HINGED AND REMOVABLE FOR EASE OF SERVICING.
4. THE HOUSING SHALL BE ABLE TO WITHSTAND 1000 HOUR SALT SPRAY TEST ASTM 117.
5. NO REARRANGEMENT OF PARTS OR SEPARATE PARTS SHALL BE REQUIRED WHEN MOUNTING THE UNIT.
6. ATTACHMENT AND LEVELING OF THE UNIT SHALL BE ACCOMPLISHED BY THE SLIPFITTER.

B. ARM MOUNTED LUMINAIRE
1. THE HOUSING SHALL HAVE AN INTERGRAL SLIPFITTER FOR 2'' PIPE AND SHALL CONTAIN A PIPE STOP. CLAMPING AND LEVELING OF THE UNIT SHALL BE ACCESSIBLE FROM WITHIN THE UNIT.

C. FINISH
1. A PRIMER COAT OF TNEMEC SERIES 66 HI BUILD EPOXOLINE OR APPROVED EQUAL SHALL BE APPLIED TO A THICKNESS OF 3 DRY MILS.
2. THE FINISH COATING SHALL BE TNEMEC SERIES 73 ENDURA SHIELD III OR APPROVED EQUAL, APPLIED TO A MINIMUM THICKNESS OF 3 DRY MILLS.
3. THE FINISH COLOR SHALL BE HUNTER GREEN, TNEMEC COLOR NUMBER PL20.
4. THE FINAL COATING SHALL BE TNEMEC SERIES 76 ENDURA CLEAR OR APPROVED EQUAL, APPLIED TO A MINIMUM THICKNESS OF 1.5 DRY MILLS.

D. LAMP SOCKET
1. THE 400 MH LAMP SOCKET SHALL BE MOGUL MULTIPLE PORCELAIN ENCLOSED. THE RATING OF THE SOCKET SHALL EXCEED THE LAMP STARTING VOLTAGE.
2. THE 70 WATT MH LAMP SOCKET SHALL BE MEDIUM MULTIPLE PORCELAIN ENCLOSED. THE RATING OF THE SOCKET SHALL EXCEED THE LAMP STARTING VOLTAGE.
3. THE SCREW SHELL OF THE SOCKET SHALL CONTAIN INTEGRAL LAMP GRIPS TO ASSURE ELECTRICAL CONTACT UNDER CONDITIONS OF NORMAL VIBRATION.
4. THE SOCKET SHALL CONFORM WITH TDJ-147 SPECIFICATION OF EEI STANDARDS.
5. THE SOCKET SHALL BE IN A HORIZONTAL POSITION.

E. DOOR GLASS
1. THE DOOR GLASS SHALL BE HEAT AND IMPACT RESISTANT AND FREE FROM IMPERFECTIONS AND STRIATIONS.

F. DOOR GLASS HOLDER-DOOR
1. THE DOOR GLASS HOLDER-DOOR SHALL BE SECURED TO THE HOUSING AT ONE END, AND HINGED TO THE HOUSING AT THE OPPOSITE END.

G. REFLECTOR
1. THE REFLECTOR SHALL BE HYDROFORMED ALUMINUM AND HAVE A HIGHLY POLISHED ANODIC SURFACE.
2. THE REFLECTOR SHALL BE RIGIDLY MOUNTED WITHIN THE HOUSING TO ASSURE A FIRM SURFACE FOR PROPER SEALING WHEN THE UNIT IS CLOSED.
3. GASKETS BETWEEN THE REFLECTOR AND GLASSWARE SHALL EFFECTIVELY SEAL THE OPTICAL ASSEMBLY FROM CONTAMINATES AND ALLOW FOR PROPER BREATHING OF THE ASSEMBLY THROUGH AN ACTIVATED CHARCOAL FILTER.
4. THE REFLECTOR DESIGN SHALL BE SUCH THAT PROPER POSITIONING OF THE LAMP SOCKET WILL PRODUCE AN IES TYPE III DISTRIBUTION FOR THE ARM MOUNTED LUMINAIRE.

I. TERMINAL BOARD
1. THE TERMINAL BOARD SHALL BE MOLDED OF FIBERGLASS REINFORCED POLYESTER WITH PROTECTIVE BARRIERS BETWEEN EACH TERMINAL.
2. THE TERMINAL SCREWS SHALL BE OF THE CAPTIVE TYPE AND EACH SCREW SHALL BE EQUIPPED WITH WIRE GRIPS WHICH WILL AUTOMATICALLY BE RAISED AND LOWERED AS THE TERMINAL SCREW IS OPERATED.
3. THE TERMINALS SHALL BE CAPABLE OF ACCEPTING UP TO #6 AWG CONDUCTOR.
4. THE TERMINAL BOARD SHALL HAVE THREE TERMINALS, ONE OF THESE TERMINALS SHALL BE FOR THE SYSTEMS GROUND AND SHALL BE CONNECTED TO THE FIXTURE HOUSING
5. WHEN A PHOTO CELL RECEPTACLE IS REQUIRED THREE ADDITIONAL TERMINALS SHALL BE PROVIDED FOR EXCLUSIVE PHOTO CELL OPERATIONS.
6. ALL UNITS ARE TO BE PREWIRED TO A SINGLE TERMINAL BOARD REQUIRING ONLY CUSTOMER CONNECTIONS TO CLEARLY IDENTIFIED TERMINALS.

J. HARDWARE
1. ALL HARDWARE SHALL BE OF NON-CORROSIVE OR SUITABLY PROTECTED METAL. WHEN NECESSARY TO PREVENT ELECTROLYTIC ACTION BY CONTACT WITH ALUMINUM COMPONENTS SHALL BE SECURED TO THE LUMINAIRE FRAME WITH STAINLESS STEEL HARDWARE OF THE AISI 300 SERIES CHROME-NICKEL GRADE.

K. BALLAST
1. THE BALLAST SHALL BE OF THE BUILT IN DESIGN MOUNTED WITHIN THE LUMINAIRE IN SUCH A MANNER THAT IT CAN EASILY BE DISCONNECTED BY SIMPLE DISCONNECTING PLUGS.
2. THE BALLAST AND OTHER AUXILIARY EQUIPMENT SHALL BE MOUNTED IN A REMOVABLE PANEL.
3. THE METAL HALIDE BALLAST SHALL BE OF THE TWO COIL, HIGH REACTANCE, HIGH POWER FACTOR TYPE DESIGH WITH AN IGNITOR FOR A 70 WATT PULSE START METAL HALIDE LAMP (ANSI CODE M-98). THE BALLAST SHALL BE EQUAL TO ADVANCE #71A5292 RATED 120/208/240/277 INPUT VOLTAGE.
4. THE METAL HALIDE BALLAST SHALL BE OF THE CONSTANT WATTAGE AUTOTRANSFORMER TYPE DESIGN FOR A 400 WATT METAL HALIDE LAMP (ANSI CODE M-59 OR H-33). THE BALLAST SHALL BE EQUAL TO ADVANCE #71A6091 RATED FOR 120/240/ INPUT VOLTAGE.
5. THE BALLAST CORE LAMINATION SHALL BE OF HIGH QUALITY ELECTRICAL GRADE STEEL WELDED TOGETHER TO MINIMIZE NOISE AND ASSURE TROUBLE FREE OPERATION OVER THE LIFE OF THE LUMINAIRE.
6. THE BALLAST COILS SHALL BE PRECISION WOUND ON FORMED INSULATING BOBBINS AND TERMINALS SHALL BE OF THE PUSH ON TYPE CONNECTIONS.
7. THE BALLAST SHALL BE CAPABLE OF STARTING AND OPERATING A 400 WATT METAL HALIDE LAMP FROM A NOMINAL 240 VOLT 60HZ POWER SOURCE WITHIN THE LIMITS SPECIFIED BY THE LAMP MANUFACTURER. THE BALLAST MUST PROTECT ITSELF AGAINST NORMAL LAMP FAILURE MODES. THE BALLAST SHALL BE CAPABLE OF OPERATION WITH LAMP IN AN OPEN OR SHORT CIRCUIT CONDITION FOR SIX MONTHS WITHOUT SIGNIFICANT LOSS OF BALLAST LIFE.

L. LAMP
1. THE 400 WATT METAL HALIDE LAMP SHALL BE EQUAL TO VENTURE #18520, MH400/U, 400 WATT, CLEAR, MOGUL BASE, ED-37, 4000°K, RATED FOR UNIVERSAL OPERATION, 36,000 INITIAL LUMENS, 28,800 MEAN LUMENS.
2. THE PULSE START METAL HALIDE LAMP SHALL BE EQUAL TO VENTURE #12180 MH70/C/U, 70 WATT, COATED, MEDIUM BASE, ED-17, 3700K, RATED FOR HORIZONTAL OPERATION.

M. INSPECTION
1. ALL INSTALLATIONS SHALL BE INSPECTED AND APPROVED BY AN IMSA CERTIFIED INSPECTOR.

mesa·az

TOWN CENTER DECORATIVE
STREETLIGHT LUMINAIRE SPECIFICATION

DETAIL NO.
M-70.03.2

REV. 02/18/2015

LAMP SPECIFICATION

GENERAL

THE LAMP SHALL BE A HIGH PRESSURE SODIUM TYPE FOR OPERATION ON AN HPS BALLAST MEETING ANSI SPECIFICATIONS. THE POLYCRYSTALLINE CERAMIC ARC TUBE SHALL HAVE POLYCRYSTALLINE CERAMIC END PLUGS AT BOTH ENDS SUCH THAT END SEAL INTEGRITY CAN RECEIVE 100% INSPECTION UNDER MAGNIFICATION. THE ELECTRICAL CONNECTION AT EACH END OF THE ARC TUBE SHALL BE VIA A SINGLE WIRE THROUGH THE CERAMIC END PLUG.

LAMP SEASONING

EACH LAMP SUPPLIED SHALL BE PRETESTED AT ITS RATED WATTAGE BY THE MANUFACTURER BEFORE SHIPPING. AFTER TESTING THE OPERATING VOLTAGE OF THE LAMP SHALL BE AS SHOWN IN THE DATA TABLE. AFTER 100 HOURS OF SEASONING AT THE RATED WATTAGE THE AVERAGE INITIAL LUMENS OF THE LAMP SHALL BE AS SHOWN ON THE DATA TABLE, AND THE OPERATING VOLTAGE OF THE LAMP SHALL BE AS SHOWN ON THE DATA TABLE.

LAMP LIFE

AT 10 HOURS PER START THE LAMP LIFE SHALL BE SUCH THAT 85% OF INSTALLED LAMPS WILL CONTINUE TO OPERATE AFTER 16,000 HOURS OF USE AND 67% WILL CONTINUE TO OPERATE AFTER 24,000 HOURS OF USE.

WARRANTY

THE SUPPLIER AND MANUFACTURER OF THESE LAMPS SHALL PROVIDE SPECIFICATION SHEETS GIVING "PERFORMANCE DATA" AND "ELECTRICAL CHARACTERISTICS" AND SHALL WARRANT THAT THE LAMPS ARE FREE FROM DEFECTS IN MATERIAL, WORKMANSHIP AND TITLE AND COMPLY WITH THEIR WRITTEN SPECIFICATIONS AND THE PROVISIONS OF THIS SPECIFICATION.

THE SUPPLIER AND MANUFACTURER AGREE THAT IF ANY LAMP FAILS DURING THE FIRST 4,000 HOURS OF OPERATION IT WILL BE REPLACED AT NO CHARGE AND THAT ANY LAMPS THAT FAIL IN EXCESS OF THE CUMULATIVE PERCENTAGE FAILURE RATE SHOWN BELOW WILL BE REPLACED AT NO COST.

LAMP OPERATING HOURS	CUMULATIVE % FAILURES	REPLACEMENT PERCENTAGE
0 - 4,000	0%	100%
4,000 - 8,000	2%	100%

DATA TABLE

LAMP #	LAMP WATT	BALLAST ANSI SPEC.	BASE DESIGNATION	BULB SHAPE	BULB MATERIAL	BULB FINISH	MAX OVERALL LENGTH	LIGHT CENTER LENGTH	VOLTAGE AFTER TESTING & 100 HOURS SEASONING	AVG. INITIAL LUMENS AFTER 100 HOURS OF SEASONING
LP-100	70	S-62	MEDIUM BRASS	E-17 OR B-17	HEAT RESIS. GLASS	COATED	5 7/16"	3 7/16"	44 - 62	5,985
LP-101	100	S-54	MOGUL BRASS	E-23 1/2	HEAT RESIS. GLASS	CLEAR	7 3/4"	5"	45 - 62	9,500
LP-102	150	S-55	MOGUL BRASS	E-23 1/2	HEAT RESIS. GLASS	CLEAR	7 3/4"	5"	45 - 62	16,000
LP-103	200	S-66	MOGUL BRASS	E-18	HEAT RESIS. GLASS	CLEAR	9 3/4"	5 3/4"	90 - 115	22,000
LP-104	250	S-50	MOGUL BRASS	E-18	HEAT RESIS. GLASS	CLEAR	9 3/4"	5 3/4"	90 - 115	27,500
LP-105	310	S-67	MOGUL BRASS	E-18	HEAT RESIS. GLASS	CLEAR	9 3/4"	5 3/4"	90 - 115	37,000
LP-106	400	S-51	MOGUL BRASS	E-18	HEAT RESIS. GLASS	CLEAR	9 3/4"	5 3/4"	90 - 115	50,000
LP-107	750	S-111	MOGUL BRASS	BT-37	HEAT RESIS. GLASS	CLEAR	11 1/2"	7"	112 - 140	110,000
LP-108	1000	S-52	MOGUL BRASS	E-25	HEAT RESIS. GLASS	CLEAR	15 1/16"	8 3/4"	210 - 275	140,000
LP-109	150	S-55	MEDIUM BRASS	E-17 OR B-17	HEAT RESIS. GLASS	CLEAR	5 11/16"	3 11/16"	45 - 62	16,000

mesa·az

HIGH PRESSURE SODIUM LAMP SPECIFICATION

DETAIL NO.
M-71

REV. 01/31/14

TIME DELAY PHOTO ELECTRIC CONTROL REQUIREMENTS

PC-101	PC-101 IS 105 - 135 VOLTS, 50/60HZ AC (120V NOMINAL)
PC-102	PC-102 IS 200 - 300 VOLTS, 50/60HZ AC

PHYSICAL

SIZE	SEE DRAWING
WEIGHT	APPROXIMATELY 7 OZ. GROSS
CHASSIS	MOLDED PHENOLIC WITH 3 POLE TWISTLOCK PLUG WITH CROSS LINKED POLYETHYLENE GASKET.
HOUSING	U.V. STABILIZED POLYPROPYLENE WITH ACRYLIC WINDOW WITH ULTRAVIOLET INHIBITOR.
COLOR CODE	PC-101 IS GRAY PC-102 IS MAROON

ELECTRICAL

SUPPLY VOLTAGE	PC-101 IS 105 - 135 VOLTS, 50/60HZ AC (120V NOMINAL) PC-102 IS 200 - 300 VOLTS, 50/60HZ AC
RATINGS LOAD	1000 WATTS / 1800VA MAX. SPST, N.C. (1000 WATTS TUNGSTEN) (1800VA MERCURY VAPOR, HIGH PRESSURE SODIUM)
INRUSH CURRENT	130 AMPERES AT 120 VOLTS 65 AMPERES AT 240 VOLTS
OPERATING LEVELS	TURN ON AVERAGE 1 FC ±0.25 FC TURN OFF BY 2.25 FC OFF TO ON RATIO: 1.5:1
CONTROL POWER	3.2 WATTS, MAXIMUM (2.75 AVERAGE) AT 240 VAC.
DIELECTRICAL STRENGTH	5 KV MINIMUM BETWEEN ANY CURRENT CARRYING PART AND METAL MOUNTING SURFACE.
SURGE SUPRESSOR	380 JOULE MOV / 13000 AMPS
PHOTOCELL	SILICON PHOTOTRANSISTOR
TIME DELAY	OFF CYCLE ONLY, 3 TO 30 SECONDS

ENVIRONMENTAL

AMBIENT TEMPERATURE RANGE	-65° FAHRENHEIT TO +158° FAHRENHEIT
MOISTURE RESISTANCE	100% RELATIVE HUMIDITY
WARRANTY	5 YEARS FROM DATE OF MANUFACTURING

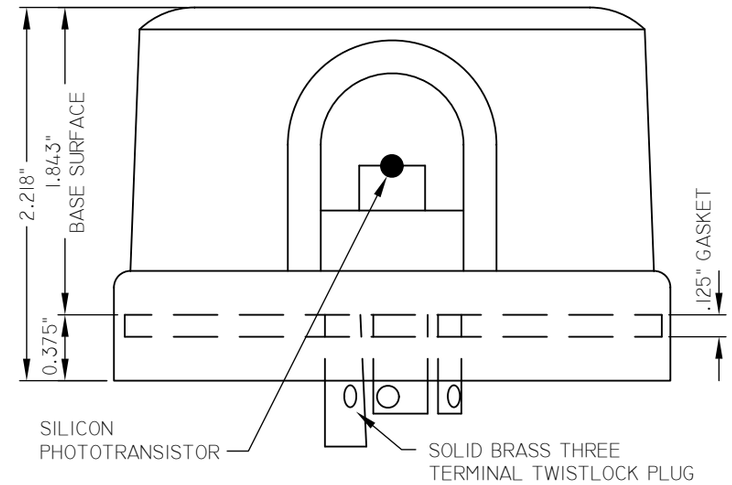

NORTH SIDE VIEW

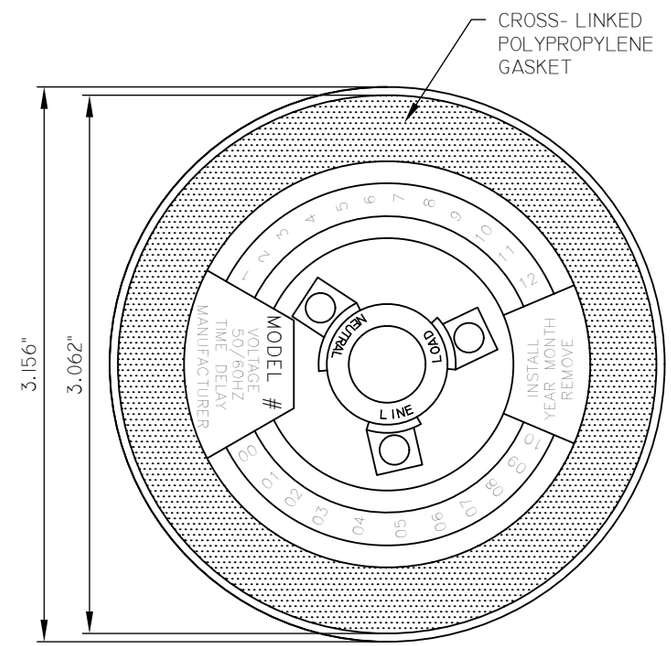

BOTTOM VIEW

NOT TO SCALE

TIME DELAY PHOTO ELECTRONIC CONTROL SPECIFICATION

DETAIL NO. M-72

REV. 01/31/2014

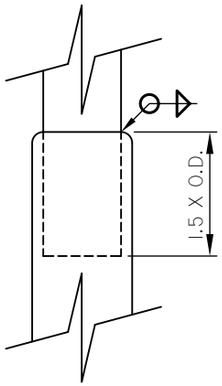

JOINT DETAIL

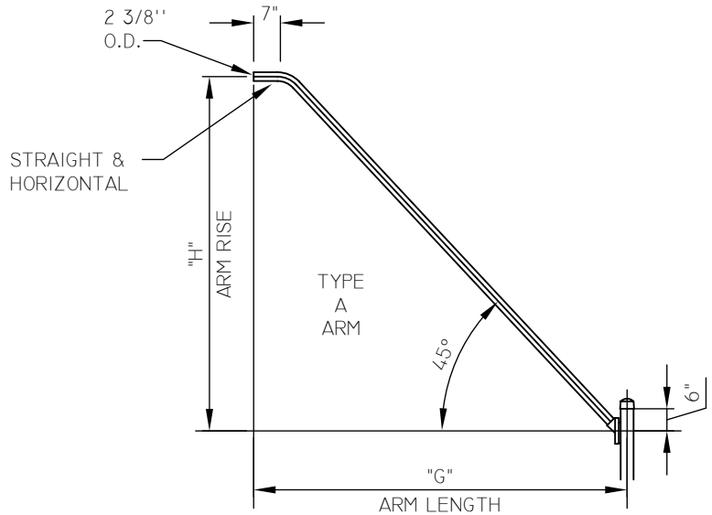

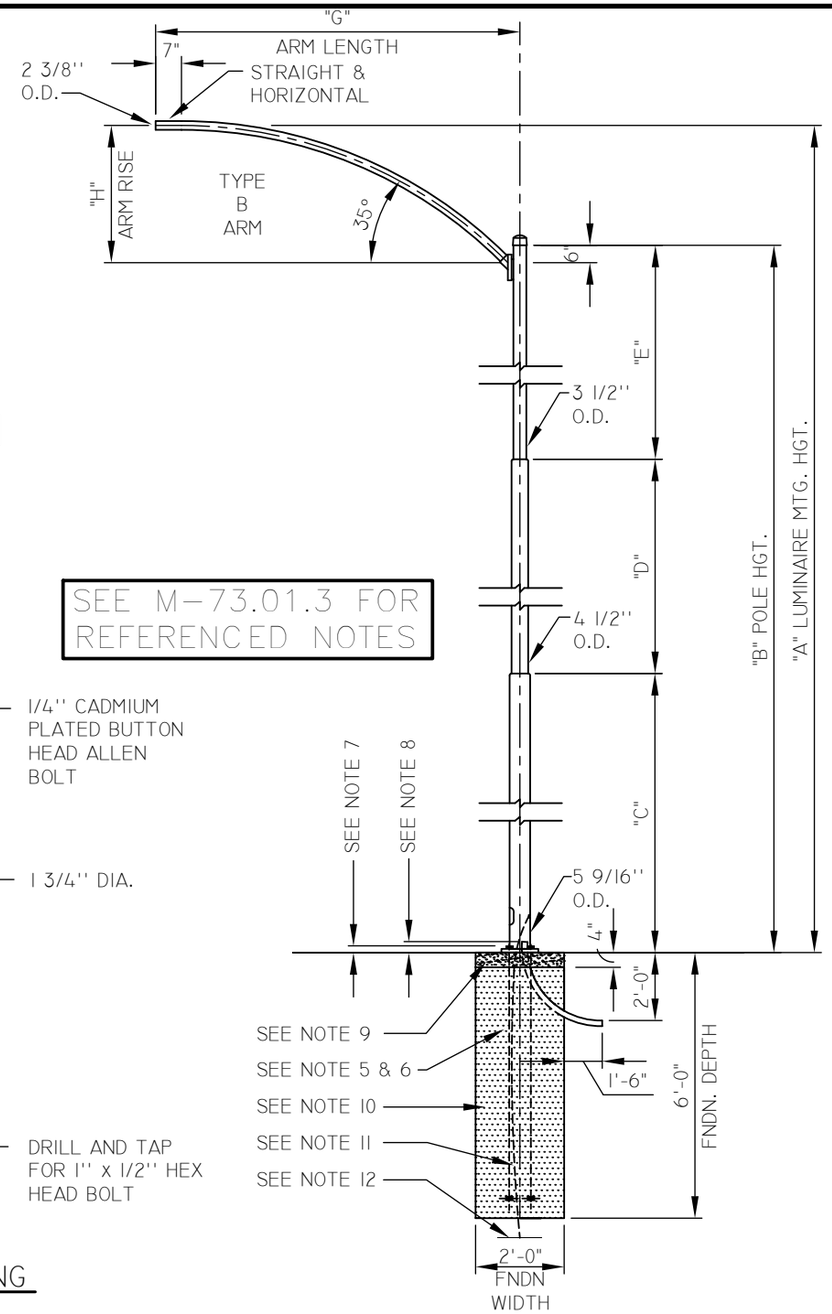

SEE M-73.01.3 FOR REFERENCED NOTES

NOTE:
ALL ARMS SHALL HAVE A 5/8'' HOLE (WITH RUBBER GROMMET) DRILLED IN THE BOTTOM SIDE OF THE ARM 3'' FROM THE EDGE OF SIMPLEX FITTING.

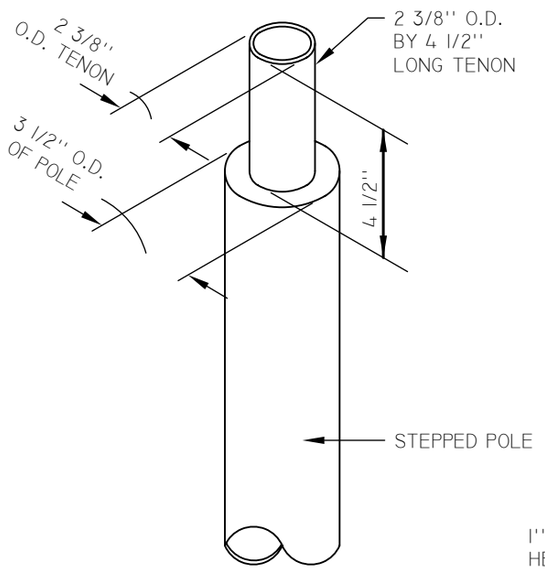

2 3/8'' x 4 1/2'' TENON DETAIL

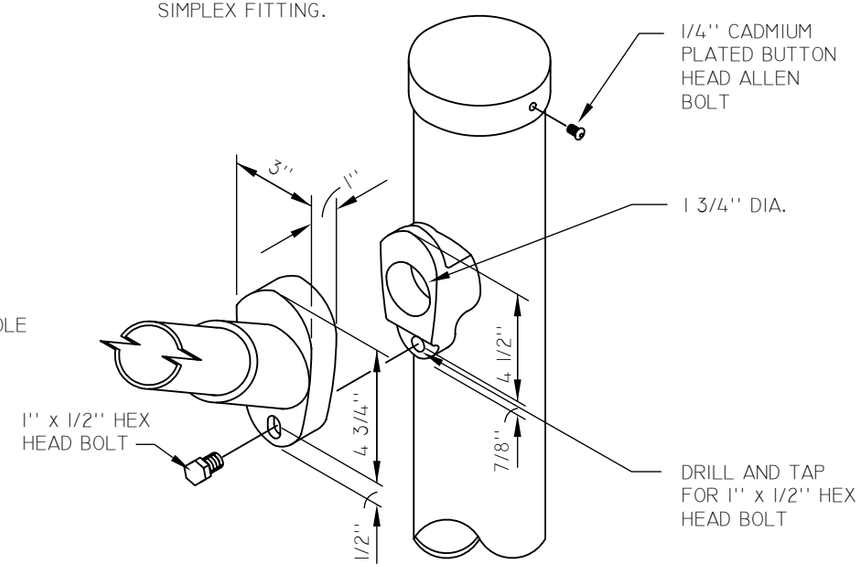

POLE CAP AND SIMPLEX FITTING

NOT TO SCALE

mesa·az

P-100 SERIES STEPPED STREETLIGHT POLE SPECIFICATION

DETAIL NO.
M-73.01.1

REV. 01/14/2015

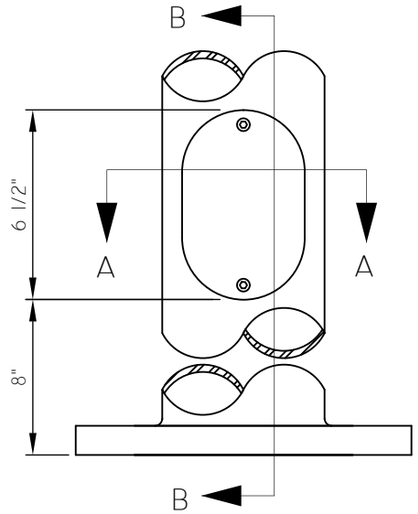

HAND HOLE DETAIL

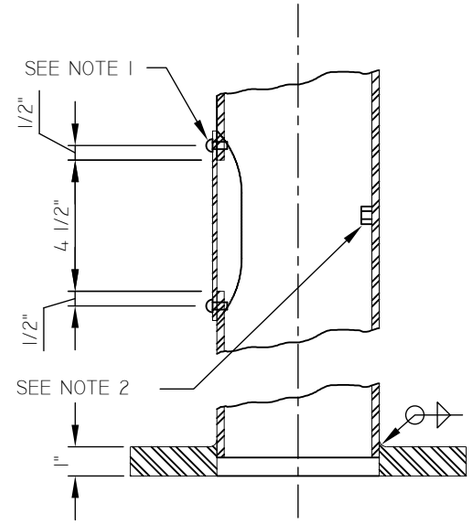

SECTION B-B

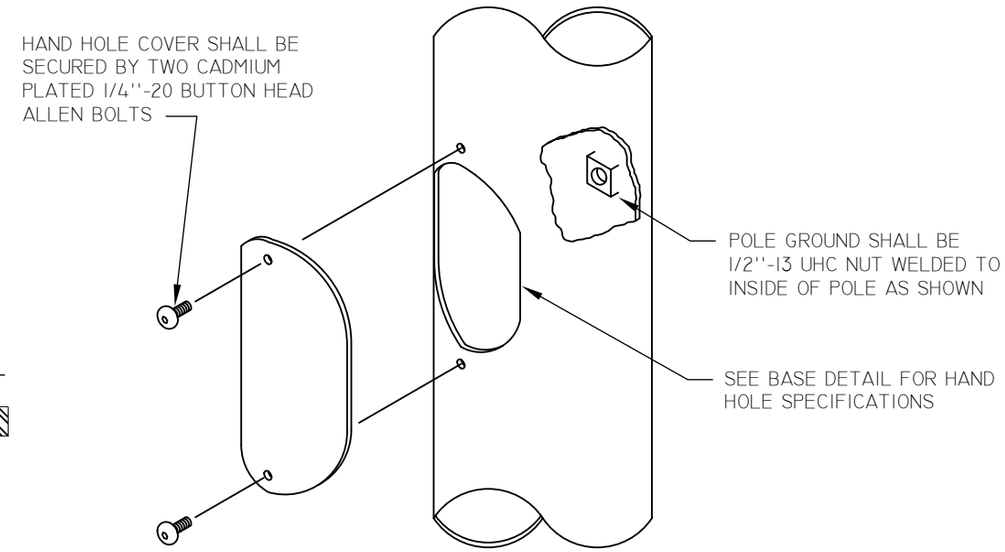

FLUSH HAND HOLE ASSEMBLY 4'' x 6 1/2''

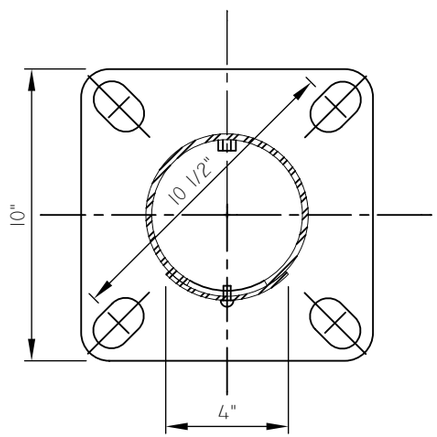

SECTION A-A

BASE DETAIL

NOTES:

1. HAND HOLE COVER SHALL BE SECURED BY TWO CADMIUM PLATED 1/4''-20 BUTTON HEAD ALLEN BOLTS.
2. POLE GROUND SHALL BE 1/2''-13 UHC NUT WELDED TO INSIDE OF POLE AS SHOWN. 3. HAND HOLE SHALL BE ORIENTED SO THAT IT IS ALIGNED WITH THE MAST ARM.
4. HAND HOLE DIMENSIONS SHALL BE 2 3/4'' BY 4 1/2''.
5. HAND HOLE COVER DIMENSIONS SHALL BE 4'' BY 6 1/2''.
6. SLOT LENGTH OF BASE PLATE EQUALS ANCHOR BOLT DIA. PLUS 1/2'' ON BOTH SIDES OF ANCHOR BOLT.

NOT TO SCALE

mesa·az

P-100 SERIES STEPPED STREETLIGHT POLE SPECIFICATION

DETAIL NO.
M-73.01.2

REV. 12/01/2014

NOTES

1. THE POLE DESIGN, MATERIALS, AND CONSTRUCTION SHALL CONFORM TO AASHTO STANDARD SPECIFICATIONS FOR STRUCTURAL SUPPORTS FOR HIGHWAY SIGNS, LUMINARIES, AND TRAFFIC SIGNALS, BASED ON A WIND SPEED OF 80 MILES PER HOUR.
2. THE POLE AND ALL PARTS SHALL BE STEEL.
3. THE POLE AND ALL POLE PARTS SHALL BE HOT DIPPED GALVANIZED PER M.A.G. STANDARD 771.
4. UNSTABLE SOIL MAY REQUIRE DEEPER FOUNDATION, AS DETERMINED BY THE ENGINEER.
5. THE 1" ANCHOR BOLT SHALL HAVE A LENGTH DETERMINED BY THE DEPTH OF THE FOUNDATION, AND SHALL EXTEND TO 6"+OR- 1" ABOVE THE BOTTOM OF THE FOUNDATION. (M-73.06)
6. ANCHOR BOLTS WITH (4) HEX NUTS, (2) FLAT WASHERS, AND (1) ANCHOR PLATE PER BOLT SHALL BE HOT DIPPED GALVANIZED PER M-73.06.
7. ANCHOR BOLTS SHALL HAVE 1/4" TO 3/4" FULL THREAD ABOVE NUT. (M-73.06)
8. CONDUIT SHALL PROJECT A MINIMUM OF 2" ABOVE THE FOUNDATION. MAXIMUM PROJECTION SHALL BE 4".
9. 2'-0" SQUARE, 4" THICK TROWELED FINISH SMOOTH CONCRETE CAP WITH 1/2" ROUND EDGE.
10. CLASS A CONCRETE PER M.A.G. STANDARD 725.
11. #6 XHHW GREEN INSULATED COPPER STRANDED BOND WIRE.
12. 14" COPPER GROUNDING PLATE. (M-73.06)
13. A STAINLESS STEEL TAG SHALL BE PERMANENTLY ATTACHED TO THE POLE ABOVE THE HAND HOLE STATING THE MANUFACTURER'S NAME, C.O.M. POLE #, AND DATE MANUFACTURED.

DATA TABLE

POLE #	LUMINAIRE MTG. HGT.	POLE HGT.	5 9/16'' O.D. PIPE	4 1/2'' O.D. PIPE	3 1/2'' O.D. PIPE	ARM TYPE	ARM LENGTH	ARM RISE
–	"A"	"B"	"C"	"D"	"E"	"F"	"G"	"H"
P-101	33'-0''	25'-6''	10'-0''	7'-9''	7'-9''	A	8'-0''	8'-0''
P-102	35'-0''	27'-6''	10'-0''	8'-9''	8'-9''	A	8'-0''	8'-0''
P-103*	30'-0''	28'-6'' DBL. ARMS	10'-0''	9'-3''	9'-3''	B	6'-0''	2'-0''
P-104*	30'-0''	28'-6''	10'-0''	9'-3''	9'-3''	B	6'-0''	2'-0''
P-105*	35'-0''	32'-6'' DBL. ARMS	13'-4''	9'-7''	9'-7''	B	8'-0''	3'-0''
P-106*	35'-0''	32'-6''	13'-4''	9'-7''	9'-7''	B	8'-0''	3'-0''
P-111	40'-0''	32'-6''	13'-4''	9'-7''	9'-7''	A	8'-0''	8'-0''
POLE #	LUMINAIRE MTG. HGT.	POLE HGT.	5 9/16'' O.D. PIPE	4 1/2'' O.D. PIPE	3 1/2'' O.D. PIPE	TENON		
–	"A"	"B"	"C"	"D"	"E"	–		
P-110*	35'-0''	35'-0''	13'-4''	12'-8''	9'-0''	2 3/8'' x 4 1/2''		

*NOTE: P-110 IS A TENON POLE WHICH USES A POLE TOP LUMINAIRE. P-103 THRU P-106 SHALL BE USED FOR NEW DEVELOPMENT REQUIRING STEPPED POLES. FOUNDATION M-76.01, F-104.

mesa·az

P-100 SERIES STEPPED STREETLIGHT POLE SPECIFICATION

DETAIL NO.
M-73.01.3

REV. 12/11/2014

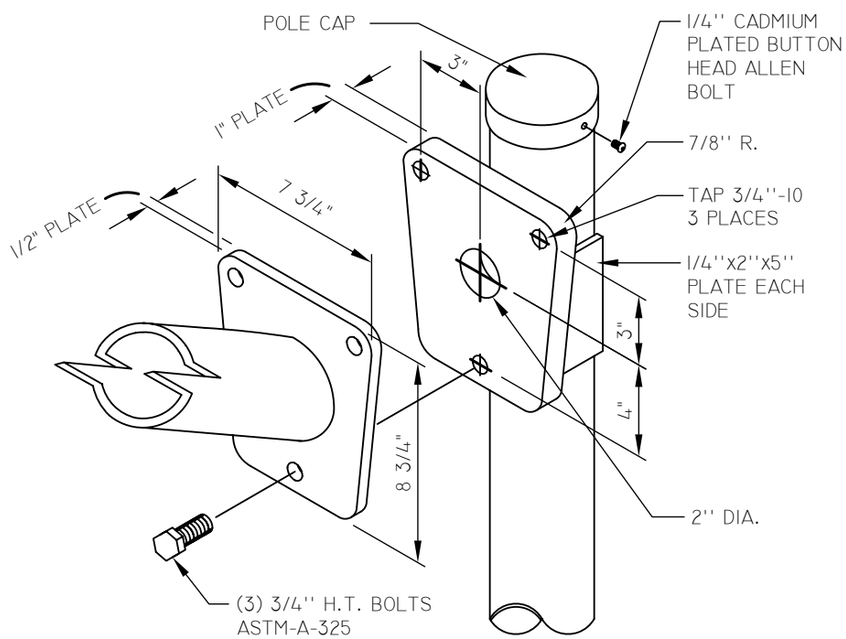

POLE CAP AND MAST ARM ATTACHMENT

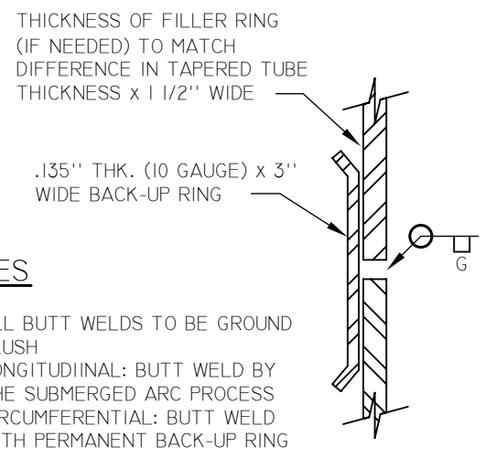

NOTES

1. ALL BUTT WELDS TO BE GROUND FLUSH
2. LONGITUDIINAL: BUTT WELD BY THE SUBMERGED ARC PROCESS
3. CIRCUMFERENTIAL: BUTT WELD WITH PERMANENT BACK-UP RING

SPLICE DETAIL

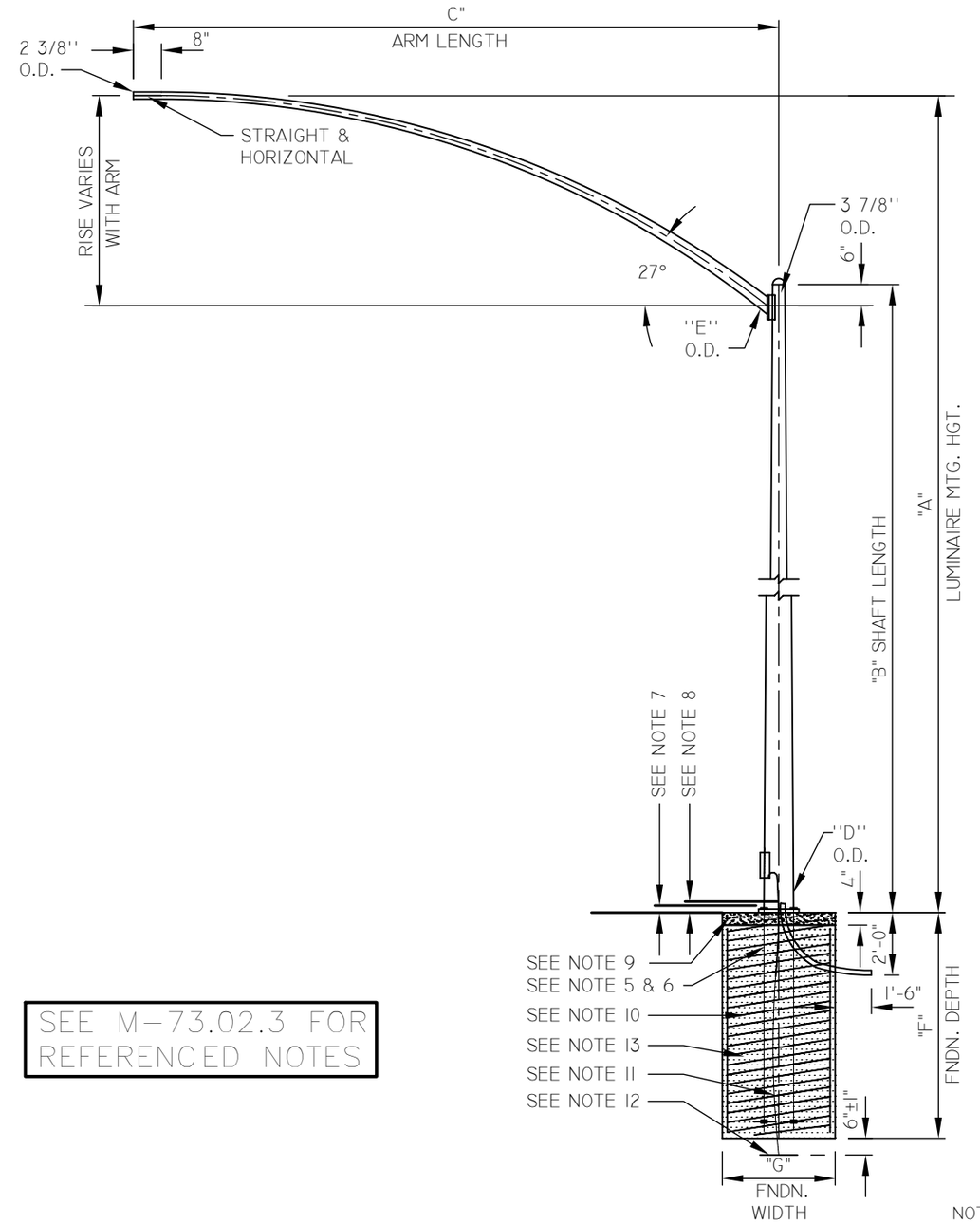

SEE M-73.02.3 FOR REFERENCED NOTES

NOT TO SCALE

mesa·az

P-200 SERIES TAPERED STREETLIGHT POLE SPECIFICATION

DETAIL NO. M-73.02.1

REV. 12/01/2014

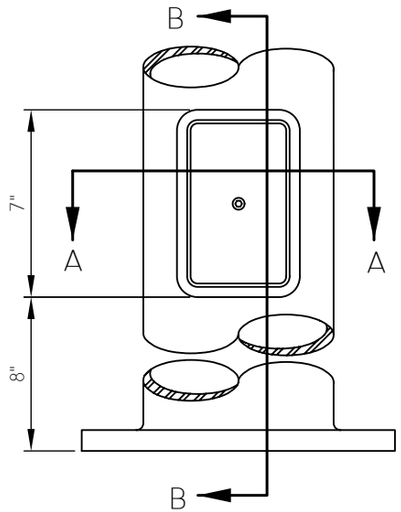

HAND HOLE ELEVATION

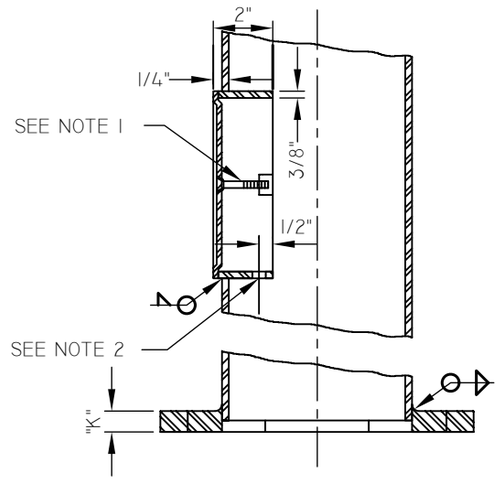

SECTION B-B

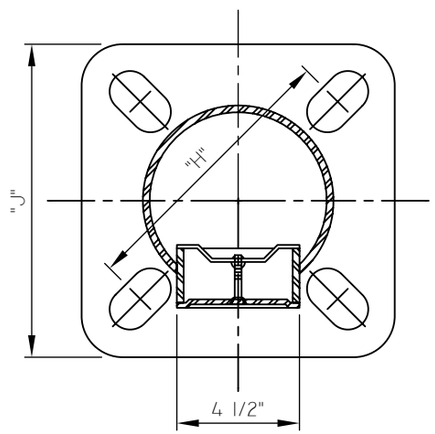

SECTION A-A

BASE DETAIL

NOTES

1. HAND HOLE COVER SHALL BE SECURED BY A CADMIUM PLATED 1/4"-20 BUTTON HEAD ALLEN BOLT AND HOLDING CLEAT.
2. POLE GROUND SHALL BE 1/2" DIA. N.C. TAPPED HOLE LOCATED AS SHOWN.
3. HAND HOLE SHALL BE ORIENTED SO THAT IT IS ALIGNED WITH THE MAST ARM.
4. HAND HOLE DIMENSIONS SHALL BE 4" X 6 1/2".
5. HAND HOLE COVER DIMENSIONS SHALL BE 4 1/2" X 7".
6. SLOT LENGTH OF BASE PLATE EQUALS ANCHOR BOLT DIA. PLUS 1/2" ON BOTH SIDES OF ANCHOR BOLT.

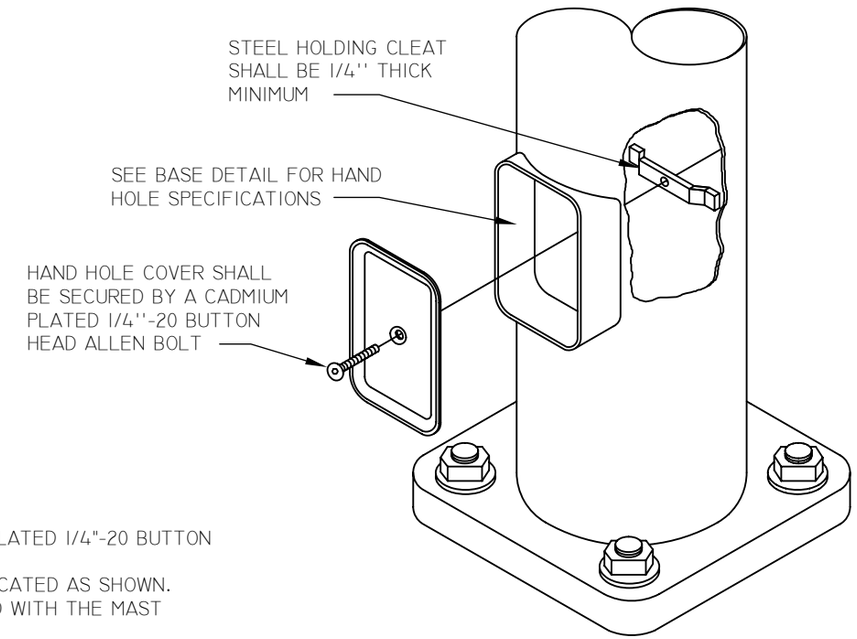

STANDARD HAND HOLE ASSEMBLY

NOT TO SCALE

mesa·az

P-200 SERIES TAPERED STREETLIGHT POLE SPECIFICATION

DETAIL NO.
M-73.02.2

REV. 12/01/2014

NOTES

1. THE POLE DESIGN, MATERIALS, AND CONSTRUCTION SHALL CONFORM TO AASHTO STANDARD SPECIFICATIONS FOR STRUCTURAL SUPPORTS FOR HIGHWAY SIGNS, LUMINARIES, AND TRAFFIC SIGNALS, BASED ON A WIND SPEED OF 80 MILES PER HOUR.
2. THE POLE AND ALL PARTS SHALL BE STEEL.
3. THE POLE AND ALL POLE PARTS SHALL BE HOT DIPPED GALVANIZED PER M.A.G. STANDARD 771.
4. UNSTABLE SOIL MAY REQUIRE DEEPER FOUNDATION, AS DETERMINED BY THE ENGINEER.
5. THE 1 1/4'' ANCHOR BOLT SHALL HAVE A LENGTH DETERMINED BY THE DEPTH OF THE FOUNDATION, AND SHALL EXTEND TO 6'' +OR- 1'' FROM THE BOTTOM OF THE FOUNDATION. (P-207, P-208, P-209 AND P-210 REQUIRE 44'' ANCHOR BOLTS). (M-73.06.1)
6. ANCHOR BOLTS WITH (4) HEX NUTS, (2) FLAT WASHERS, AND (1) ANCHOR PLATE PER BOLT SHALL BE HOT DIPPED GALVANIZED PER M.A.G. STANDARD 771. (M-73.06.1)
7. ANCHOR BOLTS SHALL HAVE 1/4" TO 3/4" FULL THREAD ABOVE NUT. (M-73.06)
8. CONDUIT SHALL PROJECT A MINIMUM OF 2'' ABOVE THE FOUNDATION. MAXIMUM PROJECTION SHALL BE 4''.
9. 3'-0'' SQUARE, 4'' THICK TROWELED FINISH SMOOTH CONCRETE CAP WITH 1/2" ROUND EDGE.
10. CLASS A CONCRETE PER M.A.G. STANDARD 725.
11. #6 XHHW GREEN INSULATED COPPER STRANDED BOND WIRE.
12. 14'' COPPER GROUNDING PLATE. (M-73.06.1)
13. P-207, P-208, P-209 AND P-210 FOUNDATIONS SHALL REQUIRE 8 EA. (#7 x 7' - 4") VERTICAL BARS WITH 3/8'' ROUND COLD DRAWN STEEL WIRE SPIRAL CAGE WITH A 3'' PITCH.
14. THE PIPE ON EACH SIDE OF A CIRCUMFERENTIAL WELD SHALL HAVE THE SAME OUTSIDE DIAMETER AT THE WELD.
15. A STAINLESS STEEL TAG SHALL BE PERMANENTLY ATTACHED TO THE POLE ABOVE THE HAND HOLE STATING THE MANUFACTURER'S NAME, C.O.M. POLE #, AND DATE MANUFACTURED.

DATA TABLE

POLE #	LUMINAIRE MTG. HT.	SHAFT LENGTH	ARM LENGTH	POLE O.D. AT BASE	ARM O.D. AT FLANGE	FNDN. DEPTH	FNDN. WIDTH	FNDN. TYP.	BOLT CIRCLE	SQUARE	PLATE
-	''A''	''B''	''C''	''D''	''E''	''F''	''G''		''H''	''J''	''K''
P-201	35'-0''	30'-0''	18'-0''	8''	5 3/16''	5'-0''	3'-0''	F-105	11 1/2''	11 1/2''	1''
P-202	35'-0''	30'-0''	20'-0''	8''	5 1/4''	5'-0''	3'-0''	F-105	11 1/2''	11 1/2''	1''
P-203	39'-0''	35'-0''	15'-0'' DBL. ARMS	8 11/16''	4 3/4''	6'-0''	3'-0''	F-103	12 1/2''	13 1/2''	1 1/2''
P-204*	40'-0''	35'-0''	18'-0'' DBL. ARMS	8 11/16''	5 3/16''	6'-0''	3'-0''	F-103	12 1/2''	13 1/2''	1 1/2''
P-205*	40'-0''	35'-0''	18'-0''	8 11/16''	5 3/16''	6'-0''	3'-0''	F-103	12 1/2''	13 1/2''	1 1/2''
P-206*	40'-0''	35'-0''	20'-0''	8 11/16''	5 1/4''	6'-0''	3'-0''	F-103	12 1/2''	13 1/2''	1 1/2''
P-209*	45'-0''	40'-0''	18'-0''	9 3/8''	5 1/4''	8'-0''	3'-0''	F-101	14 1/2''	16''	1 1/2''
P-210*	45'-0''	40'-0''	18'-0'' DBL. ARMS	9 3/8''	5 1/4''	8'-0''	3'-0''	F-101	14 1/2''	16''	1 1/2''
P-207*	45'-0''	40'-0''	20'-0''	9 3/8''	5 1/4''	8'-0''	3'-0''	F-101	14 1/2''	16''	1 1/2''
P-208*	55'-0''	50'-0''	20'-0''	10 3/4''	5 1/4''	8'-0''	3'-0''	F-101	14 1/2''	16''	1 1/2''

*NOTE: P-207 THRU P-210 REQUIRES STEEL CAGE PER GENERAL NOTE 13.
P-204 THRU P-210 SHALL BE USED FOR NEW PROJECTS, AND DEVELOPMENTS REQUIRING TAPERED POLES.
P-205, AND P-209 SHALL BE USED FOR ALIGNMENT OF FIXTURES, WHEN POLE LOCATION, OR SET BACK VARIES, AS DETERMINED BY THE ENGINEER.
FOUNDATIONS SEE M-76.01.

mesa·az

P-200 SERIES TAPERED STREETLIGHT POLE SPECIFICATION

DETAIL NO.
M-73.02.3

REV. 12/01/2014

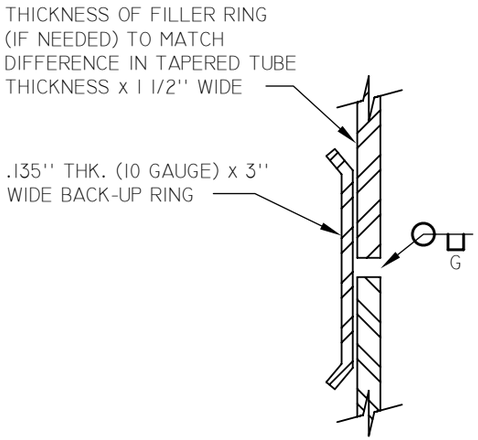

SECTION

SPLICE DETAIL

NOTES

1. ALL BUTT WELDS TO BE GROUND FLUSH.
2. LONGITUDINAL: BUTT WELD BY THE SUBMERGED ARC PROCESS
3. CIRCUMFERENTIAL: BUTT WELD WITH PERMANENT BACK-UP RING

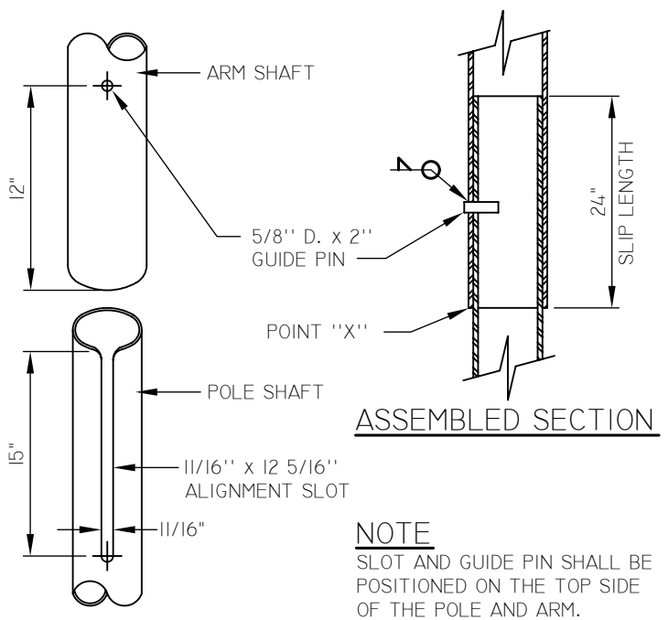

ASSEMBLED SECTION

NOTE
SLOT AND GUIDE PIN SHALL BE POSITIONED ON THE TOP SIDE OF THE POLE AND ARM.

SLIP JOINT MAST ARM ATTACHMENT

SEE M-73.03.3 FOR REFERENCED NOTES

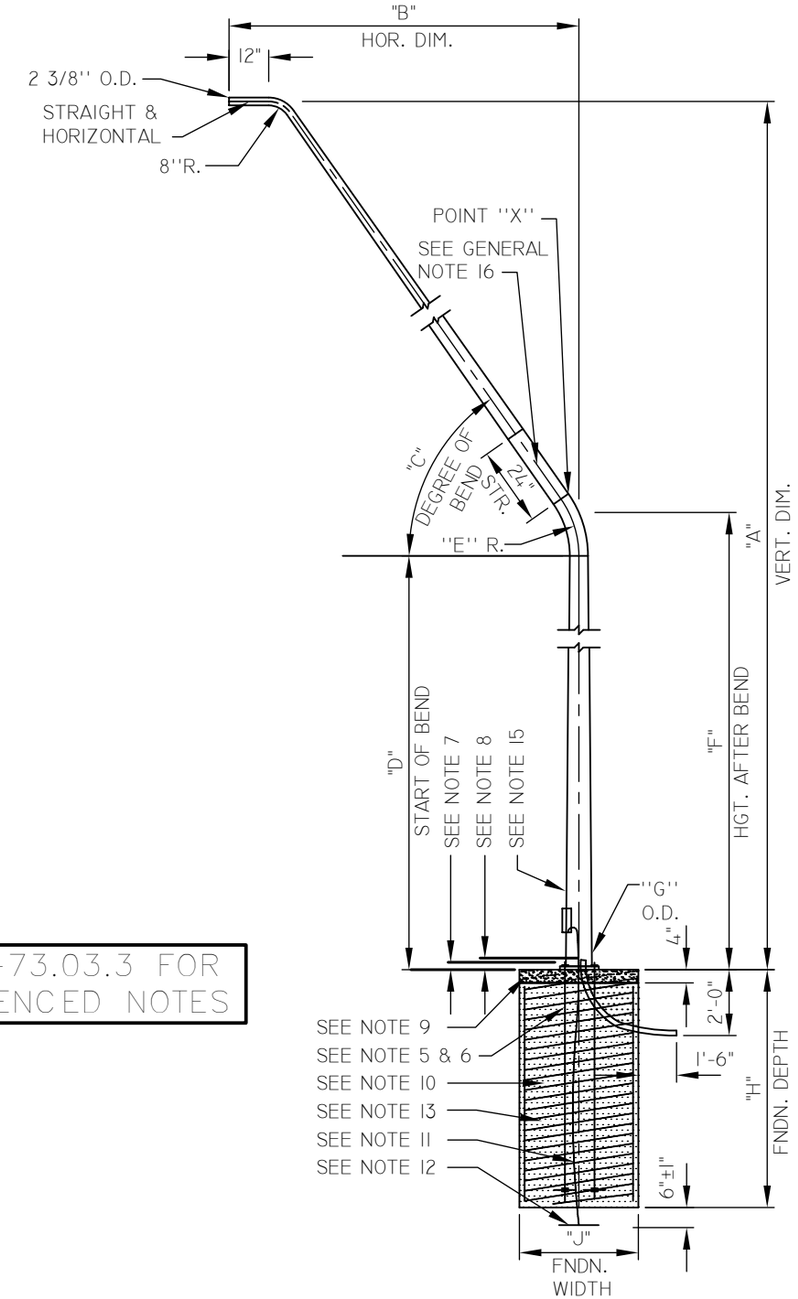

NOT TO SCALE

mesa·az

P-300 SERIES DAVIT STREETLIGHT POLE SPECIFICATION

DETAIL NO.
M-73.03.1

REV. 12/01/2014

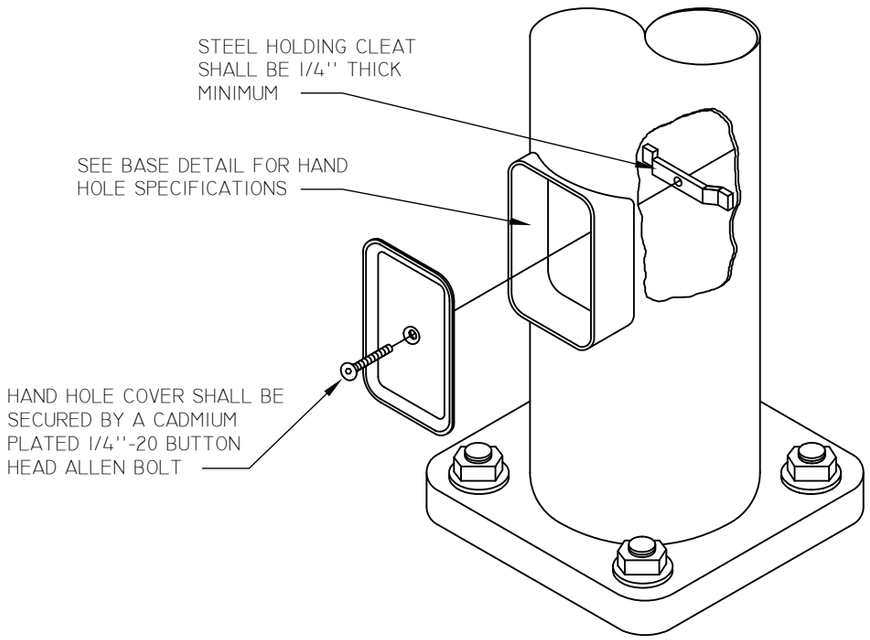

STANDARD HAND HOLE ASSEMBLY

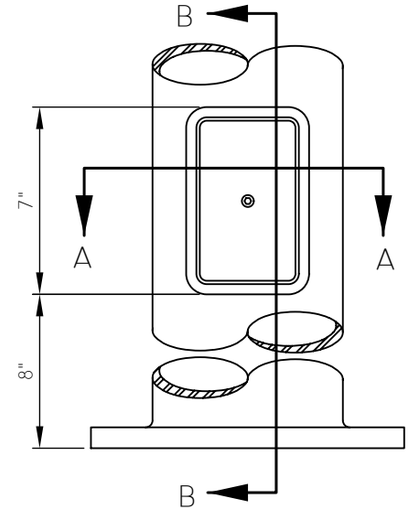

HAND HOLE ELEVATION

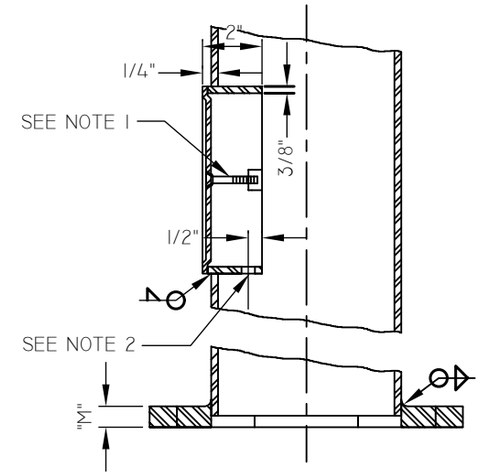

SECTION B-B

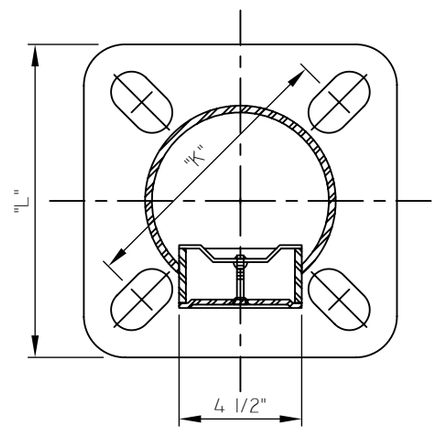

SECTION A-A

NOTES

1. HAND HOLE COVER SHALL BE SECURED BY A CADMIUM PLATED 1/4"-20 BUTTON HEAD ALLEN BOLT AND HOLDING CLEAT.
2. POLE GROUND SHALL BE 1/2" DIA. N.C. TAPPED HOLE LOCATED AS SHOWN.
3. HAND HOLE SHALL BE ORIENTED SO THAT IT IS ALIGNED WITH THE MAST ARM.
4. HAND HOLE DIMENSIONS SHALL BE 4" X 6 1/2".
5. HAND HOLE COVER DIMENSIONS SHALL BE 4 1/2" X 7".
6. HAND HOLE DIMENSIONS FOR P-301, P-302, AND P-307 SHALL BE 3 5/8'' X 5 1/2''.
7. SLOT LENGTH OF BASE PLATE EQUALS ANCHOR BOLT DIA. PLUS 1/2'' ON BOTH SIDES OF ANCHOR BOLT.

BASE DETAIL

NOT TO SCALE

mesa·az

P-300 SERIES DAVIT STREETLIGHT POLE SPECIFICATION

DETAIL NO.
M-73.03.2

REV. 12/01/2014

NOTES

1. THE POLE DESIGN, MATERIALS, AND CONSTRUCTION SHALL CONFORM TO AASHTO STANDARD SPECIFICATIONS FOR STRUCTURAL SUPPORTS FOR HIGHWAY SIGNS, LUMINARIES, AND TRAFFIC SIGNALS, BASED ON A WIND SPEED OF 80 MILES PER HOUR.
2. THE POLE AND ALL POLE PARTS SHALL BE STEEL.
3. THE POLE AND ALL POLE PARTS SHALL BE HOT DIPPED GALVANIZED PER M.A.G .STANDARD 771.
4. UNSTABLE SOIL MAY REQUIRE DEEPER FOUNDATION, AS DETERMINED BY THE ENGINEER.
5. THE 1 1/4'' ANCHOR BOLT SHALL HAVE A LENGTH DETERMINED BY THE DEPTH OF THE FOUNDATION, AND SHALL EXTEND TO 6'' +OR- 1'' FROM THE BOTTOM OF THE FOUNDATION. (P-305, P-306, P-310, AND P-311 REQUIRES 44'' ANCHOR BOLTS). (M-73.06)
6. ANCHOR BOLTS WITH (4) HEX NUTS, (2) FLAT WASHERS, AND (1) ANCHOR PLATE PER BOLT SHALL BE HOT DIPPED GALVANIZED PER M.A.G. STANDARD 771. (M-73.06)
7. ANCHOR BOLTS SHALL HAVE 1/4" TO 3/4" FULL THREAD ABOVE NUT. (M-73.06)
8. CONDUIT SHALL PROJECT A MINIMUM OF 2'' ABOVE THE FOUNDATION. MAXIMUM PROJECTION SHALL BE 4''.
9. 3'-0'' SQUARE, 4'' THICK TROWELED FINISH SMOOTH CONCRETE CAP WITH 1/2'' ROUND EDGE. (2'-0'' SQUARE FOR P-301, P-302, P-307 AND P-313).
10. CLASS A CONCRETE PER M.A.G. STANDARD 725.
11. #6 XHHW GREEN INSULATED COPPER STRANDED BOND WIRE.
12. 14'' COPPER GROUNDING PLATE. (M-73.06)
13. P-305, P-306, P-310, AND P-311 FOUNDATIONS SHALL REQUIRE 8 EA. (#7 x 7'- 4") VERTICAL BARS, WITH 3/8'' ROUND COLD DRAWN STEEL WIRE SPIRAL CAGE WITH A 3'' PITCH.
14. THE PIPE ON EACH SIDE OF A CIRCUMFERENTIAL WELD SHALL HAVE THE SAME OUTSIDE DIAMETER AT THE WELD.
15. A STAINLESS STEEL TAG SHALL BE PERMANENTLY ATTACHED TO THE POLE ABOVE THE HAND HOLE STATING THE MANUFACTURER'S NAME, C.O.M. POLE #, AND DATE MANUFACTURED.
16. A METAL TAG SHALL BE PERMANENTLY ATTACHED ON THE BOTTOM OF THE MAST ARM NEAR THE BASE STATING THE MANUFACTURER'S NAME, C.O.M. POLE #, AND DATE MANUFACTURED.

DATA TABLE

POLE #	VERT. DIM.	HOR. DIM.	DEGREE OF BEND	START OF BEND	RADIUS	HGT. AFTER BEND	O.D. AT BASE	FNDN. DEPTH	FNDN. WIDTH	FNDN. TYP.	BOLT CIRCLE	SQUARE	PLATE	ANCHOR BOLT DIAMETER
-	''A''	''B''	''C''	''D''	''E''	''F''	''G''	''H''	''J''		''K''	''L''	''M''	''N''
P-301	25'-0''	8'-0''	45°	17'-4''	26 1/2''	18'-3''	6 3/4''	6'-0''	2'-0''	F-104	10 1/2''	11 1/2''	3/4''	1''
P-302	30'-0''	13'-3''	45°	17'-9''	26 1/2''	18'-10''	6 11/16''	6'-0''	2'-0''	F-104	10 1/2''	11 1/2''	3/4''	1''
P-303	40'-0''	18'-0''	45°	21'-6''	26 1/2''	23'-9''	8 7/16''	6'-0''	3'-0''	F-103	12 1/2''	13 1/2''	1 1/2''	1 1/4''
P-304	40'-0''	20'-0''	45°	19'-6''	26 1/2''	21'-8''	8 3/16''	6'-0''	3'-0''	F-103	12 1/2''	13 1/2''	1 1/2''	1 1/4''
P-305*	45'-0''	18'-0''	45°	26'-6''	26 1/2''	28'-9''	9 1/8''	8'-0''*	3'-0''	F-101	12 1/2''	13 1/2''	1 1/2''	1 1/4''
P-306*	45'-0''	20'-0''	45°	24'-6''	26 1/2''	26'-8''	8 7/8''	8'-0''*	3'-0''	F-101	12 1/2''	13 1/2''	1 1/2''	1 1/4''
P-307	30'-0''	13'-3''	55°	11'-7''	30''	13'-7''	6 11/16''	6'-0''	2'-0''	F-104	10 1/2''	11 1/2''	3/4''	1''
P-313	35'-0''	15'-0''	55°	14'-8''	30''	15'-9''	7 1/2''	6'-0''	2'-0''	F-104	10 1/2''	11 1/2''	1''	1''
P-308	40'-0''	18'-0''	55°	13'-6''	30''	16'-0''	8''	6'-0''	3'-0''	F-103	12 1/2''	13 1/2''	1 1/2''	1 1/4''
P-309	40'-0''	20'-0''	55°	11'-9''	30''	13'-2''	7 7/8''	6'-0''	3'-0''	F-103	12 1/2''	13 1/2''	1 1/2''	1 1/4''
P-310*	45'-0''	18'-0''	55°	19'-6''	30''	21'-0''	8 5/8''	8'-0''*	3'-0''	F-101	12 1/2''	13 1/2'	1 1/2''	1 1/4''
P-311*	45'-0''	20'-0''	55°	16'-9''	30''	18'-2''	8 1/4''	8'-0''*	3'-0''	F-101	12 1/2''	13 1/2''	1 1/2''	1 1/4''

*NOTES: 1. P-305, P-306, P-310, AND P-311 REQUIRES STEEL CAGE PER NOTE 13.
2. P-301 SHALL BE USED FOR REPLACEMENT AND ONLY TO MATCH EXISTING STREETLIGHT POLES. FOUNDATIONS SEE M-76.01.

NOT TO SCALE

mesa·az

P-300 SERIES DAVIT STREETLIGHT POLE SPECIFICATION

DETAIL NO.
M-73.03.3

REV. 12/01/2014

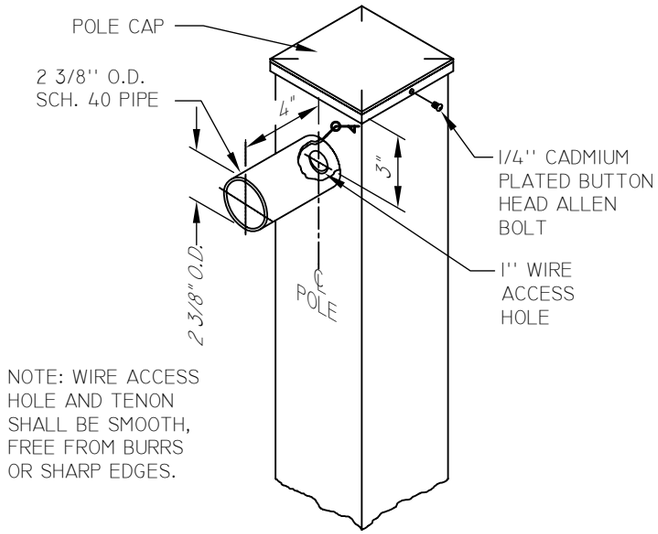

TENON FIXTURE ATTACHMENT AND POLE CAP

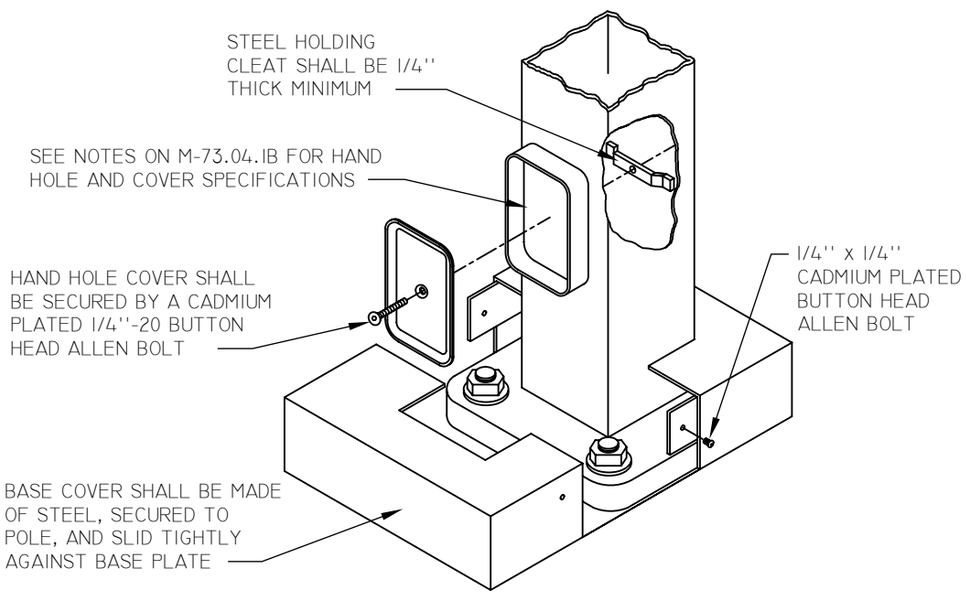

STANDARD HAND HOLE ASSEMBLY AND BASE COVER

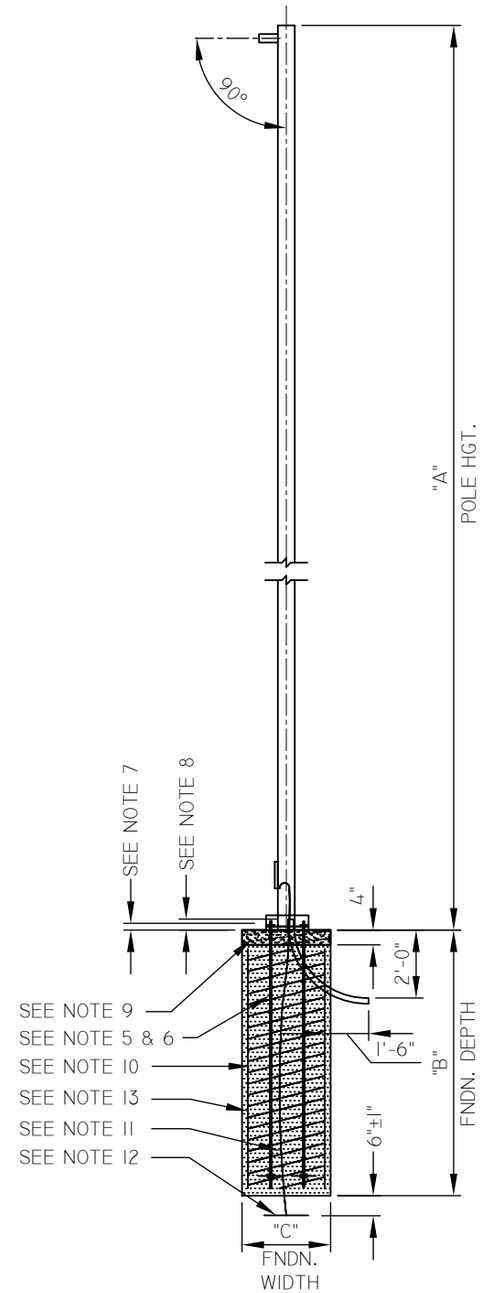

SEE M-73.04.1C
FOR
REFERENCED NOTES
AND DATA TABLE

NOT TO SCALE

mesa·az

SQUARE STREETLIGHT POLE SPECIFICATION

DETAIL NO.
M-73.04.1A

REV. 01/31/2014

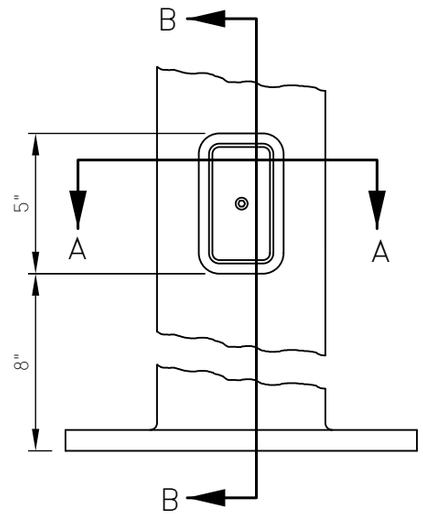

HAND HOLE DETAIL

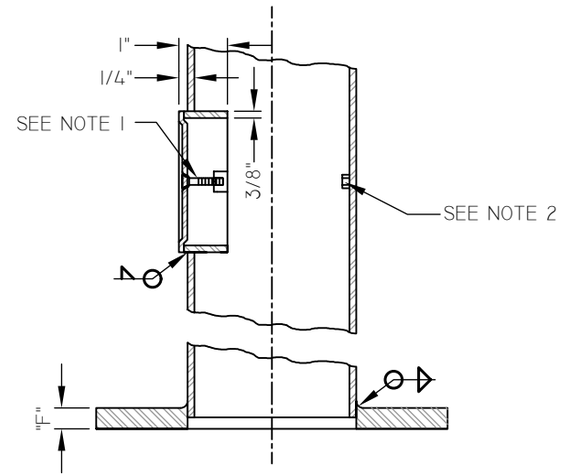

SECTION B-B

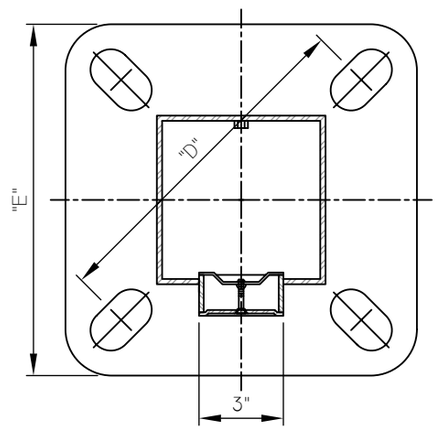

SECTION A-A

NOTES

1. HAND HOLE COVER SHALL BE SECURED BY A CADMIUM PLATED 1/4"-20 BUTTON HEAD ALLEN BOLT AND HOLDING CLEAT.
2. THE POLE'S GROUND SHALL BE 1/2''-13 UHC NUT WELDED TO INSIDE OF THE POLE AS SHOWN.
3. HAND HOLE SHALL BE ORIENTED SO THAT IT IS ALIGNED WITH THE MAST ARM.
4. HAND HOLE DIMENSIONS SHALL BE 3'' X 5''.
5. HAND HOLE COVER DIMENSIONS SHALL BE 3" X 5".
6. SLOT LENGTH OF BASE PLATE EQUALS ANCHOR BOLT DIA. PLUS 1/2'' ON BOTH SIDES OF ANCHOR BOLT.

SEE M-73.04.1C
FOR
DATA TABLE

BASE DETAIL

NOT TO SCALE

mesa·az

SQUARE STREETLIGHT POLE SPECIFICATION

DETAIL NO.
M-73.04.1B

REV. 01/31/14

DATA TABLE

POLE #	POLE HGT.	FNDN. DEPTH	FNDN. WIDTH	FNDN. TYP.	BOLT CIRCLE	SQUARE	PLATE	ANCHOR BOLT DIAMETER
	"A"	"B"	"C"		"D"	"E"	"F"	"G"
4" SQ.								
P-401	16'-0" DBL. ARMS	5'-0"	2'-0"	F-106	8"	8"	3/4"	3/4"
P-402	16'-0"	5'-0"	2'-0"	F-106	8"	8"	3/4"	3/4"
P-403	20'-0" DBL. ARMS	5'-0"	2'-0"	F-106	8"	8"	3/4"	3/4"
P-404	20'-0"	5'-0"	2'-0"	F-106	8"	8"	3/4"	3/4"
P-405	24'-0" DBL. ARMS	5'-0"	2'-0"	F-106	8"	8"	3/4"	3/4"
P-406	24'-0"	5'-0"	2'-0"	F-106	8"	8"	3/4"	3/4"
P-407	30'-0" DBL. ARMS	6'-0"	2'-0"	F-104	8"	8"	1"	1"
P-408	30'-0"	6'-0"	2'-0"	F-104	8"	8"	1"	1"
5" SQ.								
P-409	20'-0" DBL. ARMS	5'-0"	2'-0"	F-106	10 1/2"	10"	3/4"	3/4"
P-410	20'-0"	5'-0"	2'-0"	F-106	10 1/2"	10"	3/4"	3/4"
P-411	25'-0" DBL. ARMS	6'-0"	2'-0"	F-104	10 1/2"	10"	3/4"	3/4"
P-412	25'-0"	6'-0"	2'-0"	F-104	10 1/2"	10"	3/4"	3/4"
NOTE: P-401 THRU P-412 SHALL BE USED ONLY FOR REPLACEMENT AND ONLY TO MATCH EXISTING STREETLIGHT POLES.								
P-413	30'-0" DBL. ARMS	6'-0"	2'-0"	F-104	10 1/2"	10"	1"	1"
P-414	30'-0"	6'-0"	2'-0"	F-104	10 1/2"	10"	1"	1"
P-415	35'-0" DBL. ARMS	6'-0"	2'-0"	F-104	10 1/2"	10"	1"	1"
P-416	35'-0"	6'-0"	2'-0"	F-104	10 1/2"	10"	1"	1"
6" SQ.								
P-417	40'-0" DBL. ARMS	6'-0"	3'-0"	F-103	12 1/2"	12"	1 1/2"	1 1/4"
P-418	40'-0"	6'-0"	3'-0"	F-103	12 1/2"	12"	1 1/2"	1 1/4"
P-419	45'-0" DBL. ARMS	8'-0"	3'-0"	F-101	12 1/2"	12"	1 1/2"	1 1/4"
P-420	45'-0"	8'-0"	3'-0"	F-101	12 1/2"	12"	1 1/2"	1 1/4"
P-421	45'-0"	8'-0"	3'-0"	F-101	12 1/2"	12"	1 1/2"	1 1/4"
P-422	40'-0"	6'-0"	3'-0"	F-101	12 1/2"	12"	1 1/2"	1 1/4"

NOTES: 1. P-419, P-420 SHALL REQUIRE A STEEL CAGE PER NOTE 13.
2. P-413 THRU P-420 SHALL BE USED FOR NEW DEVELOPMENT REQUIRING SQUARE POLES.
3. FOUNDATIONS SEE M-76.01

NOTES

1. THE POLE DESIGN, MATERIALS, AND CONSTRUCTION SHALL CONFORM TO AASHTO STANDARD SPECIFICATIONS FOR STRUCTURAL SUPPORTS FOR HIGHWAY SIGNS, LUMINAIRES, AND TRAFFIC SIGNALS, BASED ON A WIND SPEED OF 80 MILES PER HOUR.
2. THE POLE AND ALL PARTS SHALL BE STEEL. (P-419 & P-420 POLES TO HAVE .250 WALL THICKNESS).
3. THE POLE AND ALL POLE PARTS SHALL BE SAND BLASTED TO SSPC SPECIFICATION SP-6-63. A PRIMER COAT OF TNEMEC SERIES 66 HI BUILD EPOXOLINE OR APPROVED EQUAL SHALL BE APPLIED TO A MINIMUM THICKNESS OF 3 DRY MILS. THE COLOR COATING SHALL BE TNEMEC SERIES 73 ENDURA SHIELD III OR APPROVED EQUAL, APPLIED TO A MINIMUM THICKNESS OF 3 DRY MILS. THE FINAL COATING SHALL BE TNEMEC SERIES 76 ENDURA CLEAR OR APPROVED EQUAL, APPLIED TO A MINIMUM THICKNESS OF 1.5 DRY MILLS. THE FINISH COLOR SHALL MATCH FIXTURE SPECIFIED. INTERIOR OF POLE SHALL HAVE AMERCOAT 78HB OR APPROVED EQUIVALENT FROM INSIDE BASE TO TOP OF HAND HOLE. (5MILS)
4. UNSTABLE SOIL MAY REQUIRE DEEPER FOUNDATION, AS DETERMINED BY THE ENGINEER.
5. THE ANCHOR BOLTS SHALL HAVE A LENGTH DETERMINED BY THE DEPTH OF THE FOUNDATION, AND SHALL EXTEND TO 6"+ OR - 1" ABOVE THE BOTTOM OF THE FOUNDATION. SEE COLUMN "G" IN DATA TABLE FOR DIAMETER OF ANCHOR BOLT. (P-419, AND P-420 REQUIRES 44" ANCHOR BOLTS)
6. ANCHOR BOLTS WITH (4) HEX NUTS, (2) FLAT WASHERS, AND (1) ANCHOR PLATE PER BOLT SHALL BE HOT DIPPED GALVANIZED PER COM DETAIL M-73.06.1.
7. ANCHOR BOLTS SHALL HAVE 1/4" TO 3/4" FULL THREAD ABOVE NUT PER COM DETAIL M-73.06.1
8. CONDUIT SHALL PROJECT A MINIMUM OF 2" ABOVE THE FOUNDATION. MAXIMUM PROJECTION SHALL BE 4".
9. 2'-0" SQUARE, 4" THICK TROWELED FINISH SMOOTH CONCRETE CAP WITH 1/2" ROUND EDGE. (3'-0" SQUARE FOR P-417, P-418, P-419, AND P-420).
10. CLASS A CONCRETE PER MAG STANDARD 725.
11. #6 XHHW GREEN INSULATED COPPER STRANDED GROUNDING WIRE.
12. 14" COPPER GROUNDING PLATE PER COM DETAIL M-73.06.2
13. P-419 AND P-420 FOUNDATIONS SHALL REQUIRE 8 EA. (#7 x 7'-4") VERTICAL BARS WITH 3/8" ROUND COLD DRAWN STEEL WIRE SPIRAL CAGE WITH A 3" PITCH.
14. A STAINLESS STEEL TAG SHALL BE PERMANENTLY ATTACHED TO THE POLE ABOVE THE HAND HOLE STATING THE MANUFACTURER'S NAME, COM POLE #, AND DATE MANUFACTURED.

mesa·az

P-400 SERIES SQUARE STREETLIGHT POLE SPECIFICATION

DETAIL NO.
M-73.04.1C

REV. 02/25/2015

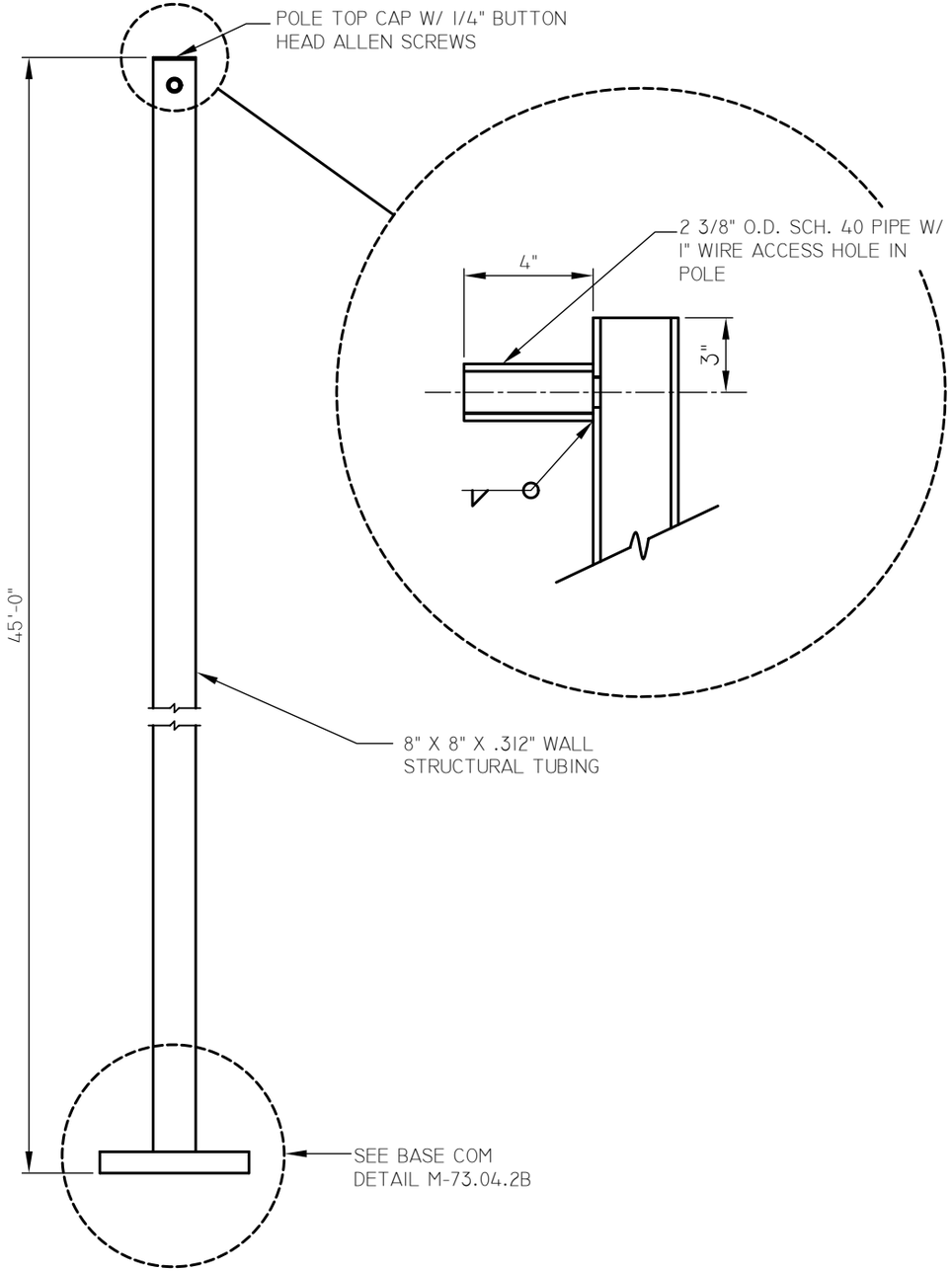

NOTES

1. THE POLE DESIGN, MATERIALS, AND CONSTRUCTION SHALL CONFORM TO AASHTO STANDARD SPECIFICATIONS FOR STRUCTURAL SUPPORTS FOR HIGHWAY SIGNS, LUMINAIRES, AND TRAFFIC SIGNALS, IT HAS A MINIMUM YIELD STRENGTH OF 50,000 PSI
2. THE POLE AND ALL PARTS SHALL BE STEEL. 8"X8"X .312 WALL THICKNESS.
3. THE POLE AND ALL POLE PARTS SHALL BE SAND BLASTED TO SSPC SPECIFICATION SP-6-63. A PRIMER COAT OF TNEMEC SERIES 66 HI BUILD EPOXOLINE OR APPROVED EQUAL SHALL BE APPLIED TO A MINIMUM THICKNESS OF 3 DRY MILS. THE COLOR COATING SHALL BE TNEMEC SERIES 73 ENDURA SHIELD III OR APPROVED EQUAL, APPLIED TO A MINIMUM THICKNESS OF 3 DRY MILS. THE FINAL COATING SHALL BE TNEMEC SERIES 76 ENDURA CLEAR OR APPROVED EQUAL, APPLIED TO A MINIMUM THICKNESS OF 1.5 DRY MILLS. THE FINISH COLOR SHALL MATCH FIXTURE SPECIFIED.
4. UNSTABLE SOIL MAY REQUIRE DEEPER FOUNDATION, AS DETERMINED BY THE ENGINEER.
5. FOR ANCHOR BOLTS SEE COM DETAIL M-73.04.3, NOTE 5.
6. ANCHOR BOLTS WITH (4) HEX NUTS, (2) FLAT WASHERS, AND (1) ANCHOR PLATE PER BOLT SHALL BE HOT DIPPED GALVANIZED PER COM DETAIL M-73.06.1.
7. ANCHOR BOLTS SHALL HAVE 1/4" TO 3/4" FULL THREAD ABOVE NUT. (COM DETAIL M-73.06)
8. CONDUIT SHALL PROJECT A MINIMUM OF 2'' ABOVE THE FOUNDATION. MAXIMUM PROJECTION SHALL BE 4''.
9. 3'-0'' SQUARE, 4'' THICK TROWELED FINISH SMOOTH CONCRETE CAP WITH 1/2'' ROUND EDGE.
10. CLASS A CONCRETE PER MAG STANDARD 725.
11. #6 XHHW GREEN INSULATED COPPER STRANDED GROUNDING WIRE.
12. 14'' COPPER GROUNDING PLATE PER COM DETAIL M-73.06.2.
13. FOR FOUNDATION SEE COM DETAIL M-73.04.3.
14. FOR MANHOLE & BASE SEE COM DETAIL M-73.04.2A
15. A STAINLESS STEEL TAG SHALL BE PERMANENTLY ATTACHED TO THE POLE ABOVE THE HAND HOLE STATING THE MANUFACTURER'S NAME, COM POLE #, AND DATE MANUFACTURED.

NOT TO SCALE

mesa·az

SQUARE STREETLIGHT ASU BANNER POLE SPECIFICATION (P-421)

DETAIL NO.
M-73.04.2A

REV. 01/31/14

NOTES

1. HAND HOLE COVER SHALL BE SECURED BY A CADMIUM PLATED 1/4"-20 BUTTON HEAD ALLEN BOLT AND HOLDING CLEAT.
2. THE POLE'S GROUND SHALL BE 1/2''-13 UHC NUT WELDED TO INSIDE OF THE POLE AS SHOWN.
3. HAND HOLE SHALL BE ORIENTED SO THAT IT IS ALIGNED WITH THE MAST ARM.
4. HAND HOLE DIMENSIONS SHALL BE 3'' BY 5''.
5. HAND HOLE COVER DIMENSIONS SHALL BE 3" BY 5".
6. SQUARE PLATE 1 3/4"X 15" WITH 2" DIA. X 2 3/4" LONG SLOTTED HOLES ON 15 1/2" BOLT CIRCLE.

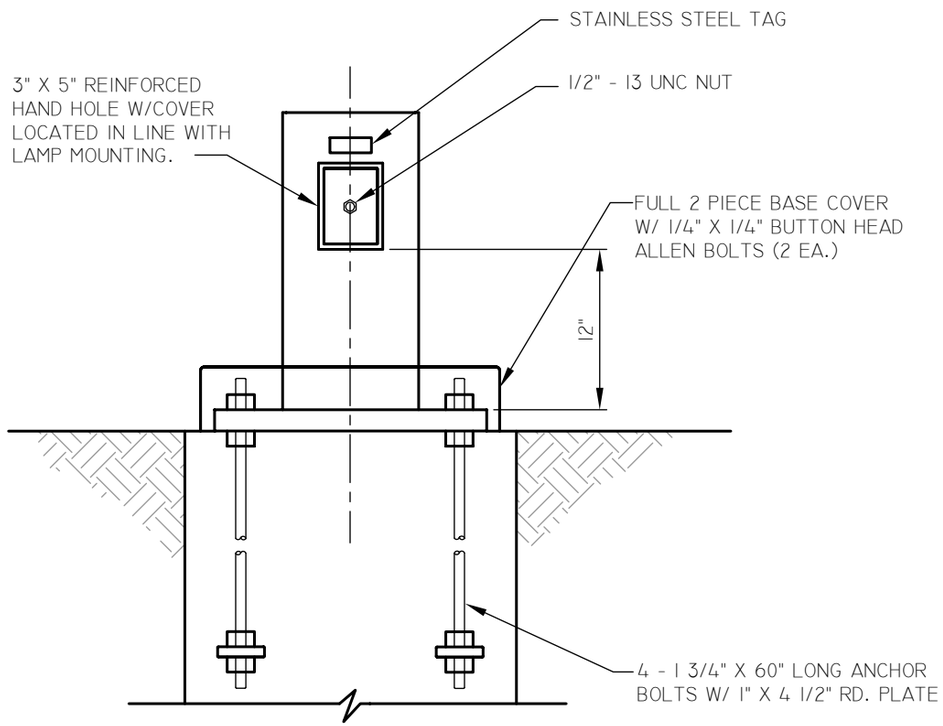

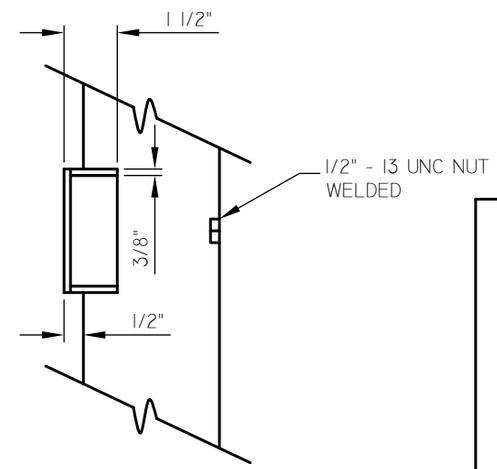

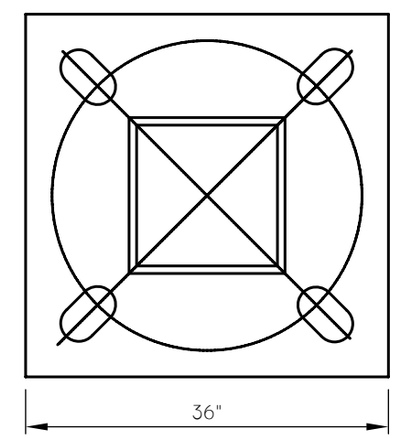

BASE DETAIL

NOT TO SCALE

mesa·az

SQUARE STREETLIGHT ASU BANNER POLE SPECIFICATION (P-421)

DETAIL NO. M-73.04.2B

REV. 01/31/14

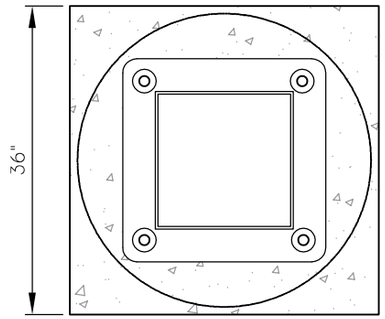

TOP VIEW

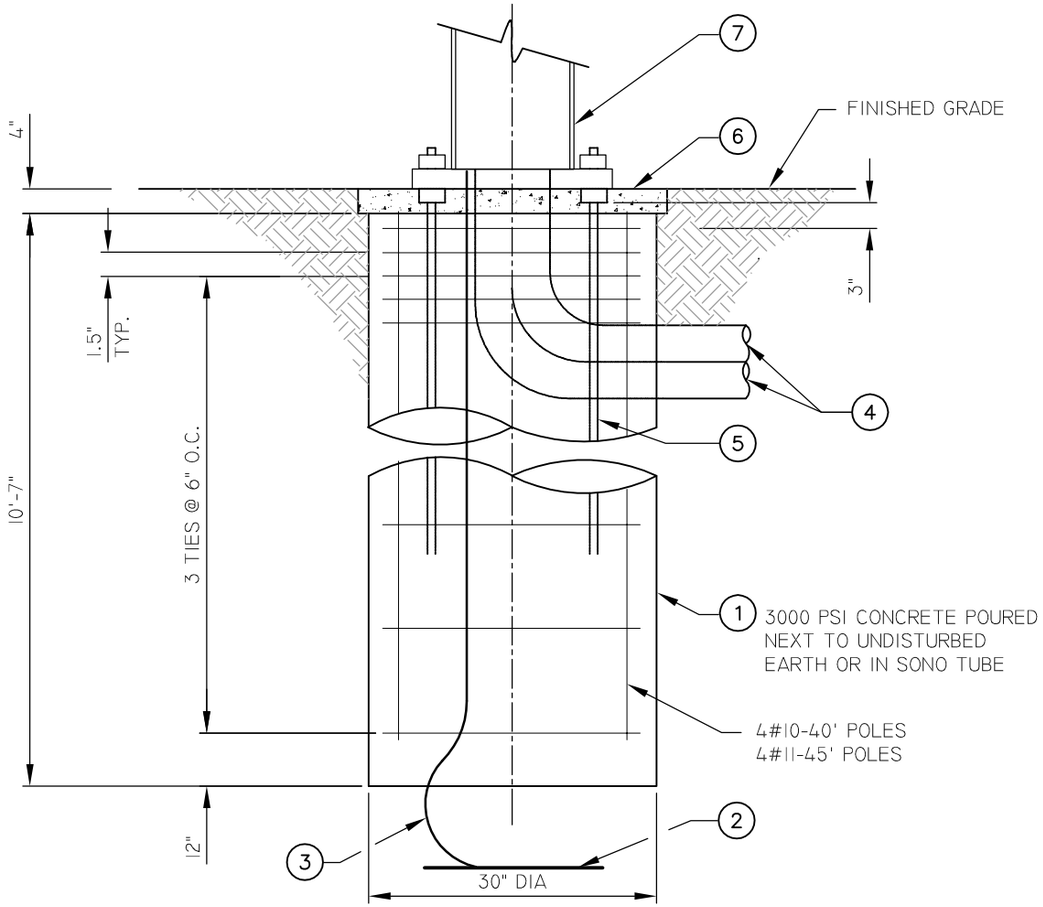

NOTES

1. ALL POLE FOUNDATIONS SHALL HAVE A 14" DIA. COPPER GROUNDING PLATE PER COM DETAIL M-73.06.2 AND PLACED 6" BELOW BOTTOM OF POLE FOUNDATION.
2. FINISHED FRADE FOR ALL POLE FOUNDATIONS SHALL MATCH SIDEWALK GRADE, UNLESS OTHERWISE NOTED.
3. ALL CONDUIT BENDS SHALL BE FACTORY 45 AND 90 DEGREE BENDS WITH A MINIMUM RADIUS OF 18".
4. UNDERGROUND WIRING CIRCUITS SHALL BE INSTALLED IN SCHEDULE 40 RIGID P.V.C. CONDUIT. IT SHALL BE U.L. APPROVED FOR ABOVE GROUND AND UNDERGROUND USE WITH 90 DEGREE C WIRE. MINIMUM DEPTH FROM TOP OF CURB TO TOP OF CONDUIT SHALL NOT BE LESS THAN 24" UNLESS OTHERWISE SPECIFIED.
5. INSPECTION BY ENGINEERING INSPECTOR SHALL BE REQUESTED BY THE ELECTRICAL CONTRACTOR WHEN THE POLE FOUNDATIONS ARE DUG, ANCHOR BOLTS, GROUND WIRE, AND GROUNDING PLATE ARE READY AND IN PLACE AND PRIOR TO POURING CONCRETE.
6. WHEN CONCRETE FOUNDATIONS ARE POURED THEY SHALL BE VIBRATED WITH A MECHANICAL VIBRATOR.
7. POLE FOUNDATIONS SHALL CURE FOR 72-HOURS BEFORE INSTALLING LIGHT POLES.
8. IN IRRIGATED AREAS, FOUNDATIONS & POLES AND PULL BOXES SHALL BE INSTALLED IN SUCH A MANNER THAT THEY ARE KEPT FREE OF CONTACT WITH IRRIGATION WATER. REFER TO M-76.02.2 FOR REQUIREMENTS PER APPLICABLE CONDITIONS.
9. IN AREAS THAT SLOPE AWAY FROM THE SIDEWALK, CURB, OR ROADWAY, THE GRADE AROUND THE POLES SHALL BE SUCH THAT SIDEWALK, CURB, OR ROADWAY CAN BE USED AS THE GRADE CONTROL POINT FOR THE POLE FOUNDATION ELEVATION. REFER TO M-76.02.2 FOR REQUIREMENTS PER APPLICABLE CONDITIONS.
10. UNSTABLE SOIL MAY REQUIRE DEEPER FOUNDATIONS AS DETERMINED BY THE ENGINEER.

FOUNDATION NOTES

1. FOUNDATION SHALL BE CLASS A CONCRETE PER MAG STANDARD 725.
2. 14" DIA. COPPER GROUNDING PLATE PER COM DETAIL M-73.06.2
3. THE BOND CONDUCTOR IN THE CONCRETE FOUNDATION SHALL BE A #6 STRANDED AND GREEN WIRE WITH XHHW INSULATION.
4. 1-1/2" SCHEDULE 40 P.V.C. 90 DEGREE BEND CONDUITS WITH A RADIUS OF NOT LESS THAN 18" (FACTORY BENDS ONLY SHALL BE USED). CONDUITS SHALL PROJECT A MINIMUM OF 2" ABOVE THE FOUNDATION. MAXIMUM PROJECTION SHALL BE 4". WHERE PC POLE IS USED A 1-1/2" CONDUIT SHALL BE USED.
5. 4-1-3/4" DIA. X 60" ANCHOR BOLTS (55KSI) W/ LEVELING NUTS & WAHSHERS. OPTIONAL: TACK-WELD NUTS TO WASHERS & WASHERS TO BASE PLATE AFTER TIGHTENING OF BOLTS. TORQUE = 650 FT-LBS.
6. 3'-0" SQUARE, 4" THICK TROWELED FINISH SMOOTH CONCRETE CAP WITH 1/2" ROUND EDGE. CONCRETE SHALL BE CLASS B PER MAG STANDARD SPECIFICATION 725.
7. POLE PER COM DETAIL M-73.04.1.

NOT TO SCALE

mesa·az

FOUNDATION DETAIL FOR ASU BANNER POLE (P-421)

DETAIL NO.
M-73.04.3

REV. 12/01/2014

NOTE

BREAK-AWAY BANNER DESIGNED FOR 50 MPH WIND WITH 1.3 GUST FACTOR WITH BANNER INSTALLED.

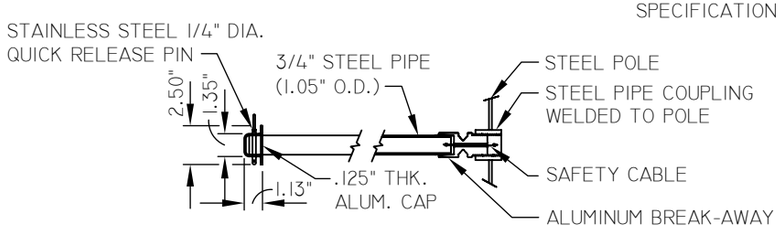

BANNER ARM DETAIL

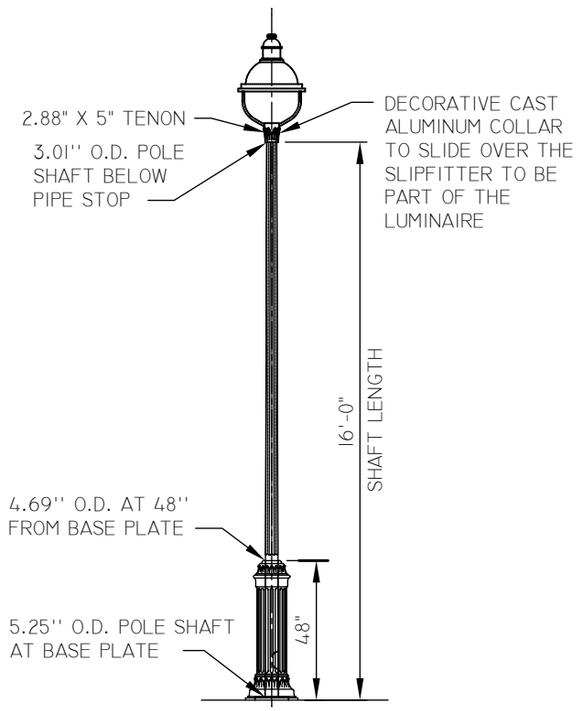

P-901 POLE TOP

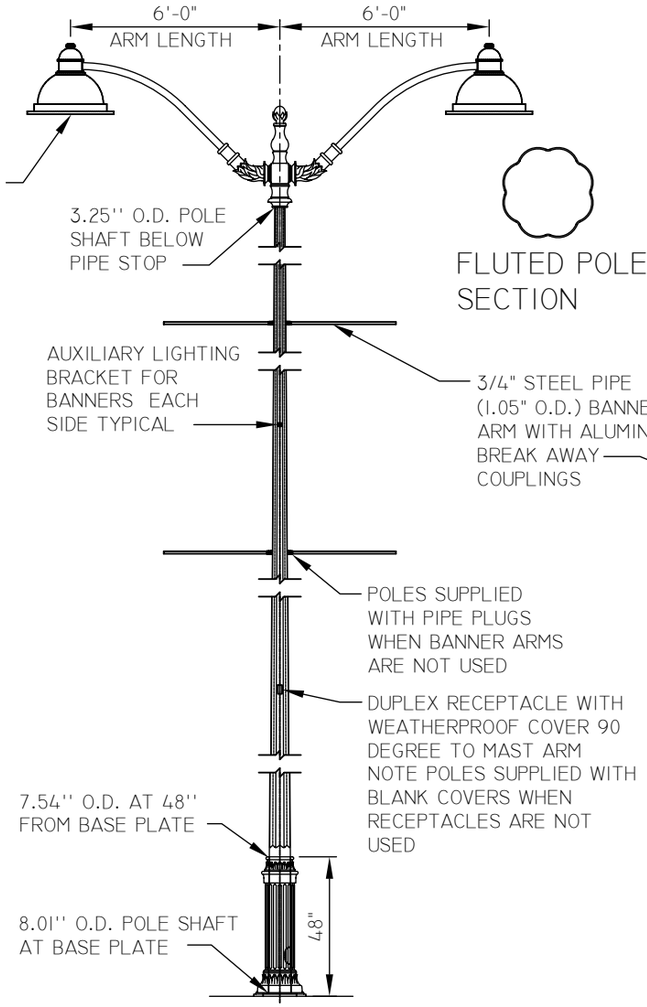

P-902 DOUBLE ARM

FLUTED POLE SECTION

SEE M-73.05.3 FOR REFERENCED NOTES

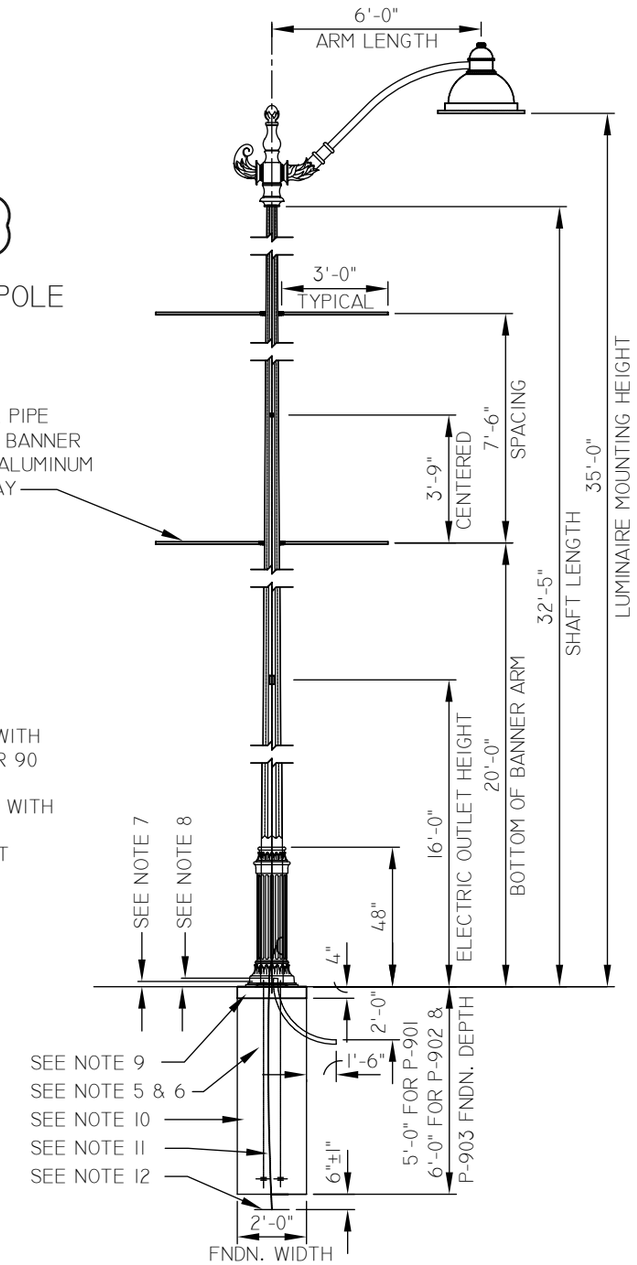

P-903 SINGLE ARM

NOT TO SCALE

mesa·az

TOWN CENTER DECORATIVE STREETLIGHT POLE SPECIFICATION

DETAIL NO. M-73.05.1

REV. 01/31/2014

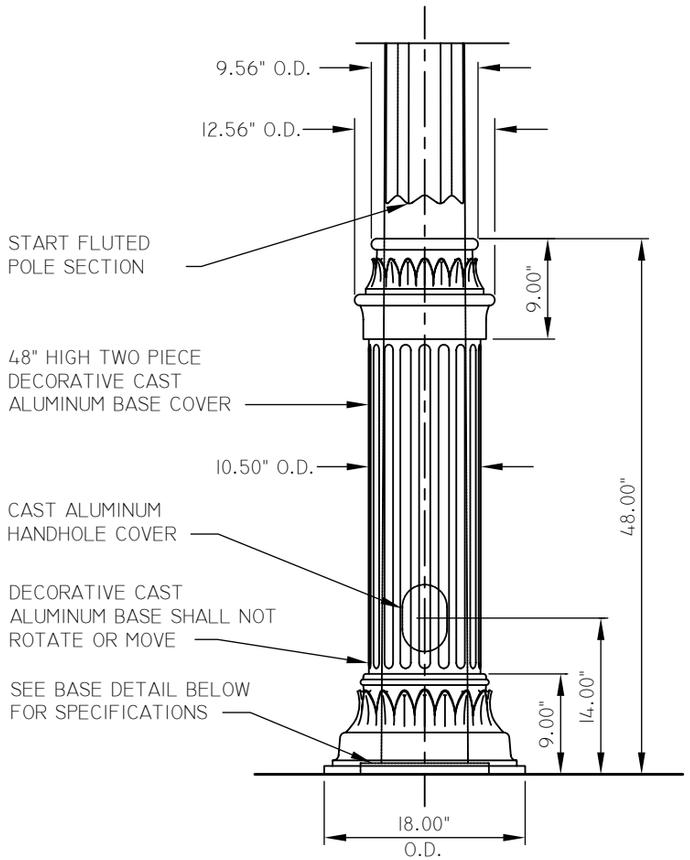

BASE COVER DETAIL

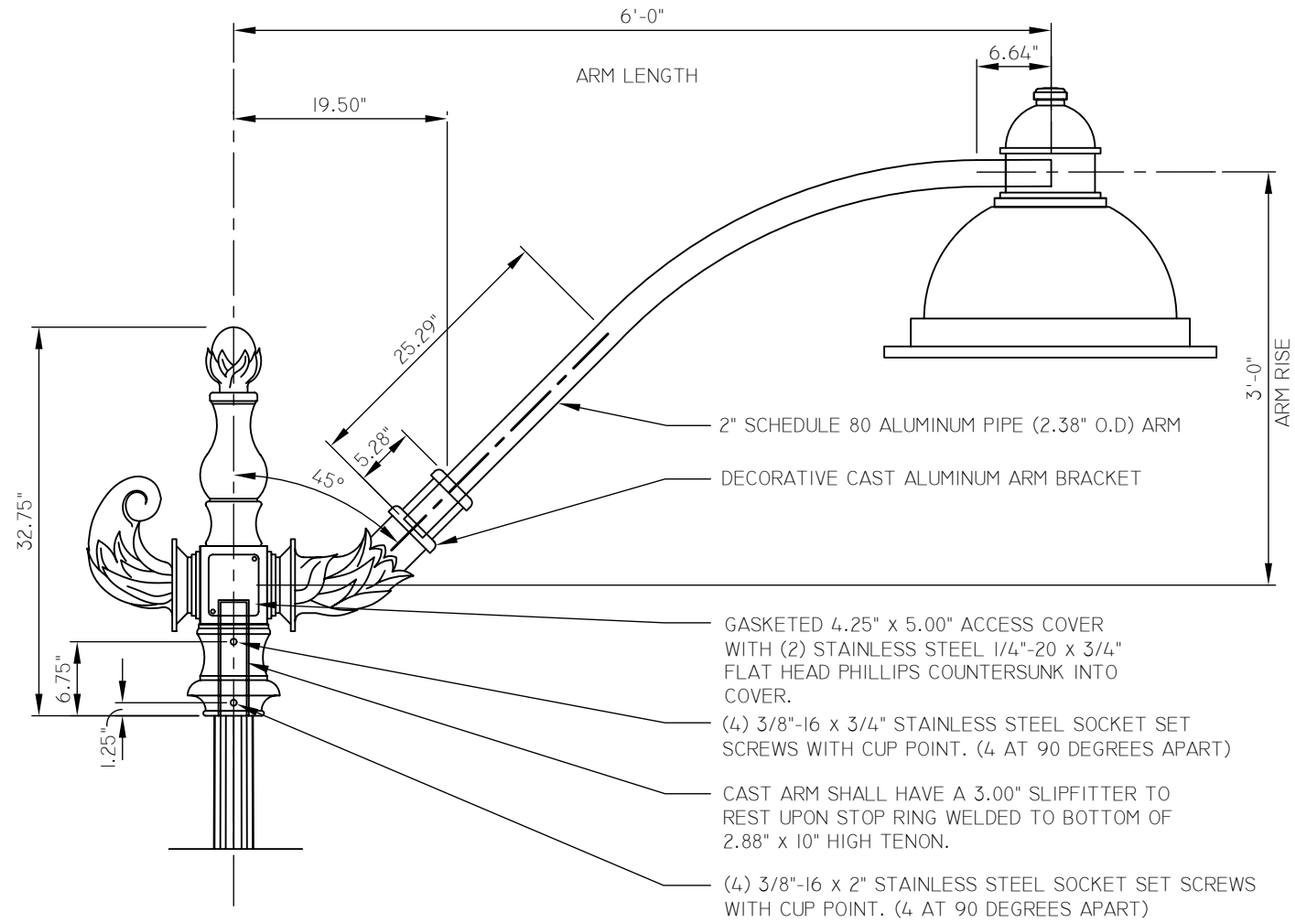

ARM BRACKET DETAIL

NOT TO SCALE

mesa·az

TOWN CENTER DECORATIVE
STREETLIGHT POLE SPECIFICATION

DETAIL NO.
M-73.05.2

REV. 01/31/2014

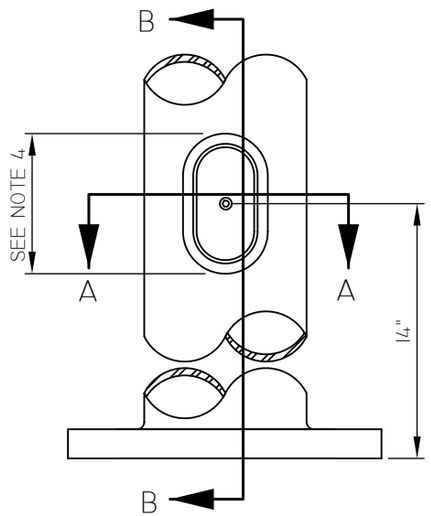

HAND HOLE DETAIL

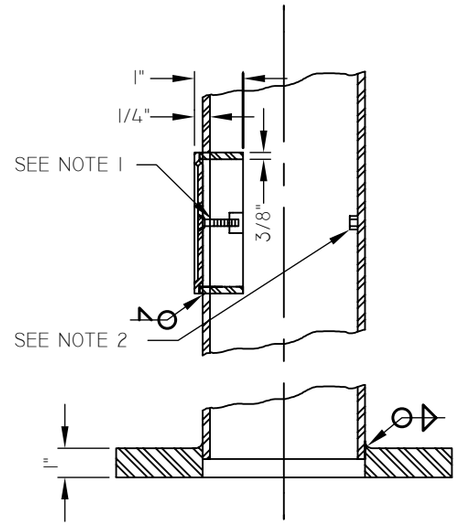

SECTION B-B

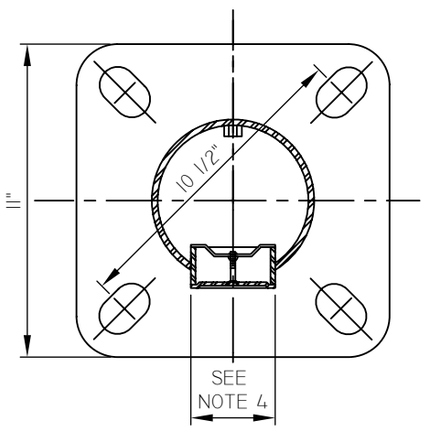

SECTION A-A

NOTES

1. HAND HOLE COVER SHALL BE SECURED BY A STAINLESS STEEL 1/4"-20 BUTTON HEAD ALLEN BOLT AND HOLDING CLEAT.
2. POLE GROUND SHALL BE 1/2''-13 UHC NUT WELDED TO INSIDE OF POLE AS SHOWN.
3. HAND HOLE SHALL BE ORIENTED SO THAT IT IS ALIGNED WITH THE MAST ARM.
4. HAND HOLE DIMENSIONS SHALL BE 3" x 5" (P-901) & 4" x 6" (P-902, P-903).
5. SLOT LENGTH OF BASE PLATE EQUALS ANCHOR BOLT DIA. PLUS 1/2'' ON BOTH SIDES OF ANCHOR BOLT.

BASE DETAIL

NOTES

1. THE POLE DESIGN, MATERIALS, AND CONSTRUCTION SHALL CONFORM TO AASHTO STANDARD SPECIFICATIONS FOR STRUCTURAL SUPPORTS FOR HIGHWAY SIGNS, LUMINAIRES, AND TRAFFIC SIGNALS, BASED ON A WIND SPEED OF 80 MILES PER HOUR.
2. THE POLE SHALL BE STEEL WITH THE DECORATIVE ARM, BASE COVER, AND RECEPTACLE COVER TO BE ALUMINUM.
3. THE STEEL POLE SHALL BE SAND BLASTED TO SSPC SPECIFICATIONS SP-6-63. THE CAST ALUMINUM DECORATIVE ARM, BASE COVER, RECEPTICAL COVER, AND OTHER MISCELLANEOUS ALUMINUM PARTS SHALL BE SOLVENT CLEANED TO SSPC-SP1 SPECIFICATION TO REMOVE ALL SOLUBLE CONTAMINANTS. AFTER SURFACE PREPARATION A PRIMER COAT OF TNEMEC SERIES 66 HI BUILD EPOXOLINE OR APPROVED EQUAL SHALL BE APPLIED TO A THICKNESS OF 3 DRY MILS. THE COLOR COATING SHALL BE TNEMEC SERIES 73 ENDURA SHIELD III OR APPROVED EQUAL, APPLIED TO A MINIMUM THICKNESS OF 3 DRY MILS. THE FINAL COATING SHALL BE TNEMEC SERIES 76 ENDURA CLEAR OR APPROVED EQUAL, APPLIED TO A MINIMUM THICKNESS OF 1.5 DRY MILS. THE FINISH COLOR SHALL BE HUNTER GREEN, TNEMEC COLOR NUMBER PL20.
4. UNSTABLE SOIL MAY REQUIRE DEEPER FOUNDATION, AS DETERMINED BY THE ENGINEER.
5. THE 1" ANCHOR BOLT SHALL HAVE A LENGTH DETERMINED BY THE DEPTH OF THE FOUNDATION, AND SHALL EXTEND TO 6" +OR- 1" ABOVE THE BOTTOM OF THE FOUNDATION. (M-73.06)
6. ANCHOR BOLTS WITH 4 HEX NUTS, 2 FLAT WASHERS, AND 1 ANCHOR PLATE PER BOLT SHALL BE HOT DIPPED GALVANIZED PER M-73.06.
7. ANCHOR BOLTS SHALL HAVE 1/4" TO 3/4" FULL THREAD ABOVE NUT. (M-73.06)
8. CONDUIT SHALL PROJECT A MINIMUM OF 2" ABOVE THE FOUNDATION. MAXIMUM PROJECTION SHALL BE 4".
9. 2'-0" SQUARE, 4" THICK TROWELED FINISH SMOOTH CONCRETE CAP WITH 1/2" ROUND EDGE.
10. CLASS A CONCRETE PER M.A.G. STANDARD 725.
11. #6 XHHW GREEN INSULATED COPPER STRANDED BOND WIRE.
12. 14" COPPER GROUNDING PLATE. (M-73.06)
13. THE PIPE ON EACH SIDE OF A CIRCUMFERENTIAL WELD SHALL HAVE THE SAME OUTSIDE DIAMETER AT THE WELD.

NOT TO SCALE

mesa·az

TOWN CENTER DECORATIVE
STREETLIGHT POLE SPECIFICATION

DETAIL NO.
M-73.05.3

REV. 01/31/2014

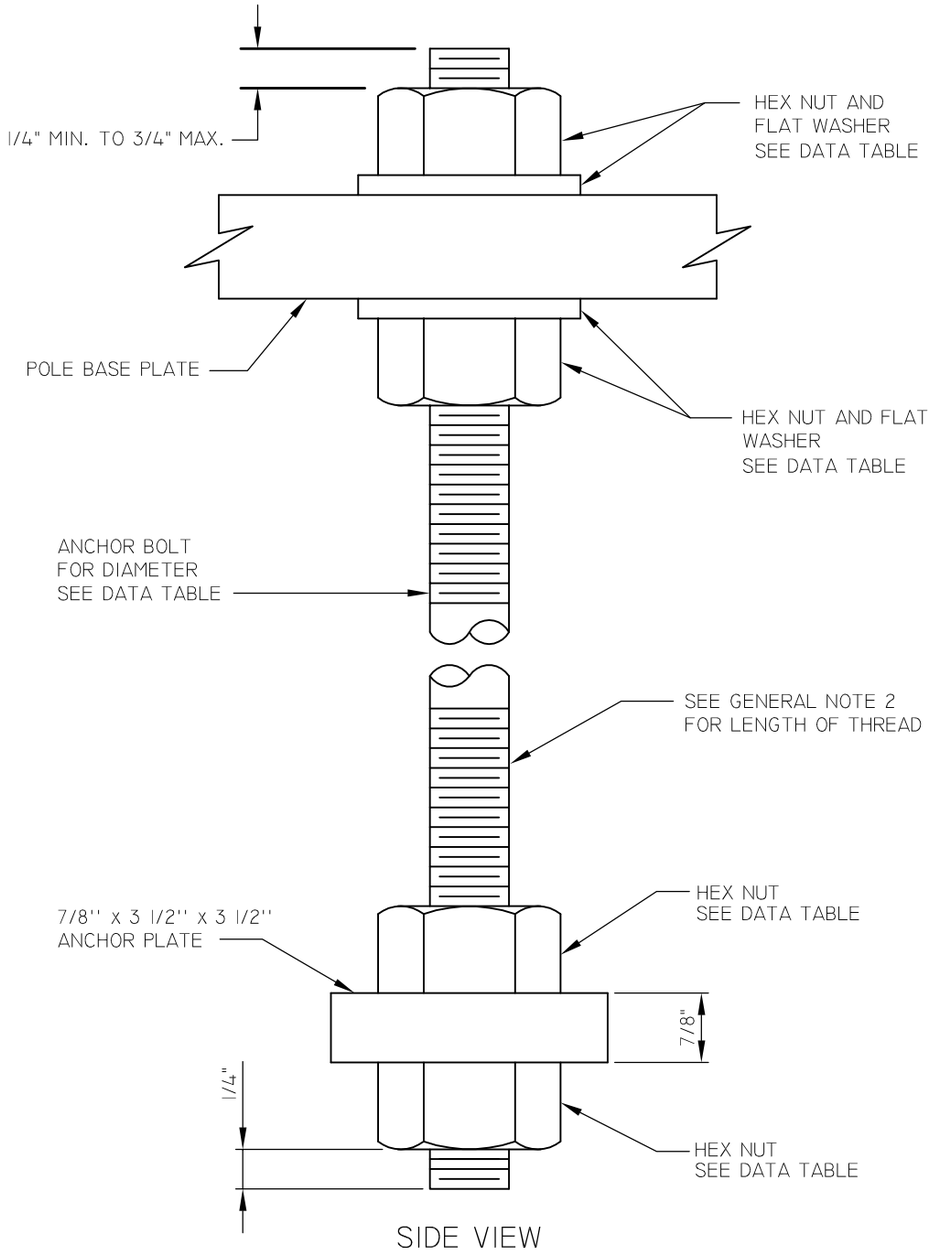

SIDE VIEW

DATA TABLE

ANCHOR BOLT DIMENSIONS				
A.B. #	A.B. DIA.	A.B. LENGTH	SIZE OF PLATE	SIZE OF HEX NUT
4'-0'' FOUNDATION DEPTH				
AB-108	3/4"	44"	7/8" x 3 1/2" x 3 1/2"	3/4"
5'-0'' FOUNDATION DEPTH				
AB-101	3/4''	56''	7/8'' x 3 1/2'' x 3 1/2''	3/4''
AB-102	1''	56''	7/8'' x 3 1/2'' x 3 1/2''	1''
AB-103	1 1/4''	56''	7/8'' x 3 1/2'' x 3 1/2''	1 1/4''
6'-0'' FOUNDATION DEPTH				
AB-104	1''	69''	7/8'' x 3 1/2'' x 3 1/2''	1''
AB-105	1 1/4''	69''	7/8'' x 3 1/2'' x 3 1/2''	1 1/4''
8'-0'' FOUNDATION DEPTH				
AB-107	1 1/4''	44''	7/8'' x 3 1/2'' x 3 1/2''	1 1/4''

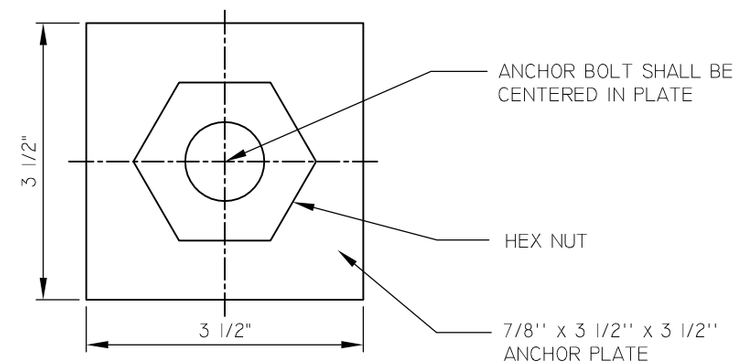

ANCHOR PLATE PLAN

NOTES

1. THE ANCHOR BOLT AND PARTS SHALL BE IN ACCORDANCE WITH ASTM A-36, OR A-307.
2. ANCHOR BOLT SHALL HAVE A MINIMUM THREAD LENGTH OF 6'' AT EACH END.
3. THE ANCHOR BOLT AND PARTS SHALL BE HOT DIPPED GALVANIZED PER MAG STD. 771 AFTER FABRICATION AND THREADING.
4. THE ANCHOR BOLT SHALL BE FURNISHED WITH (4) HEX NUTS, (2) FLAT WASHERS, AND (1) ANCHOR PLATE PER BOLT.

AB-101 - AB-108 ANCHOR BOLTS

NOT TO SCALE

mesa·az

ANCHOR BOLT & COPPER GROUNDING PLATE SPECIFICATION

DETAIL NO. M-73.06.1

REV. 03/02/2015

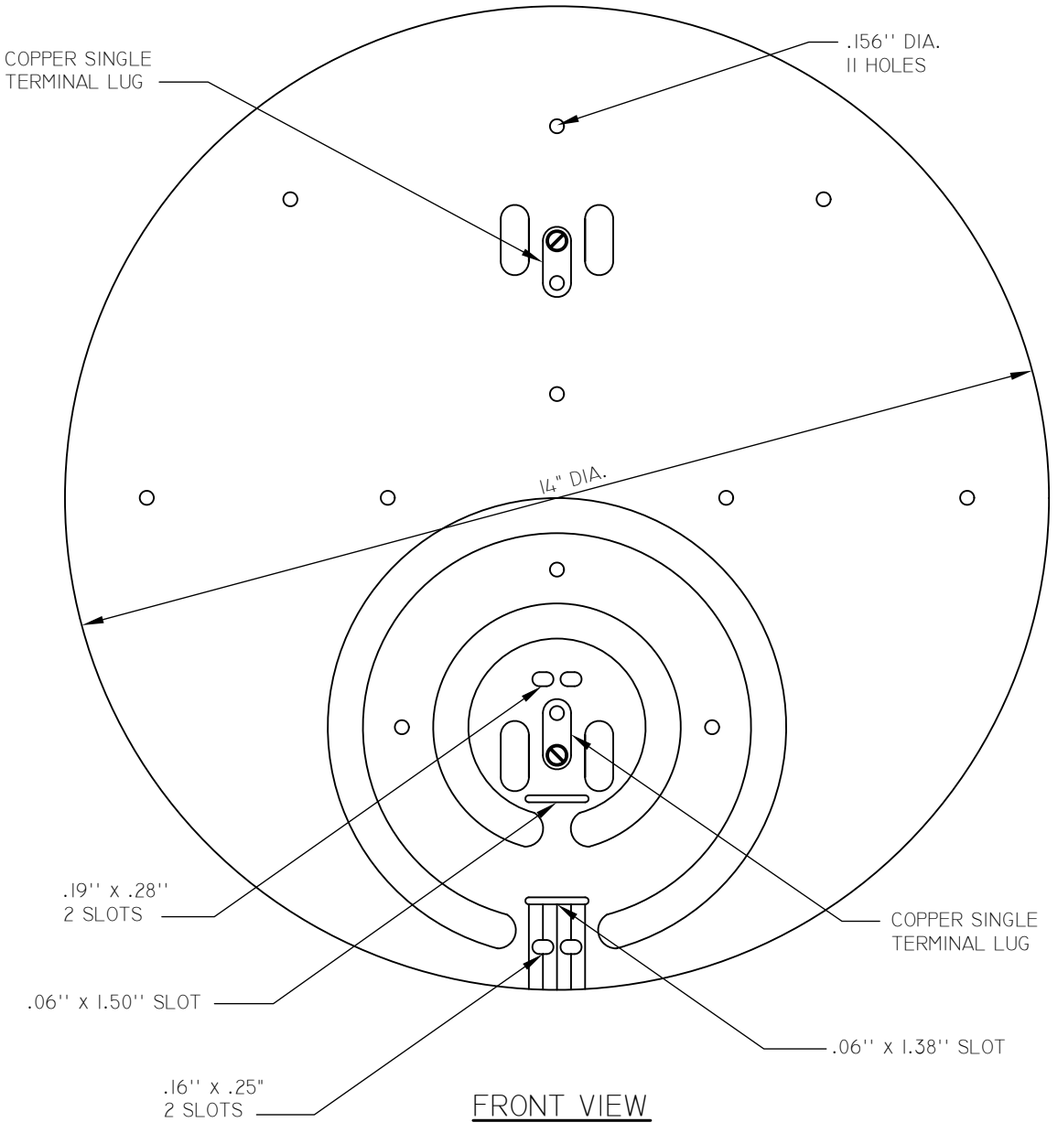

FRONT VIEW

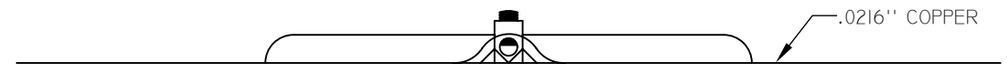

SIDE VIEW

G-101 COPPER GROUNDING PLATE

NOT TO SCALE

mesa·az

ANCHOR BOLT & COPPER GROUNDING
PLATE SPECIFICATION

DETAIL NO.
M-73.06.2

REV. 01/31/14

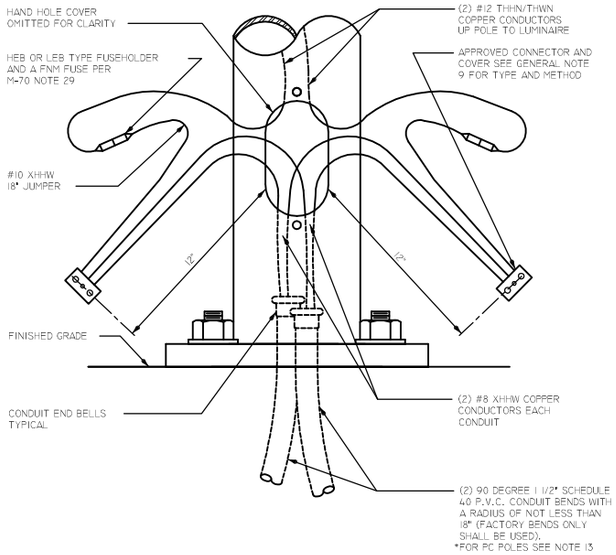

RESIDENTIAL CURRENT CARRYING DETAIL

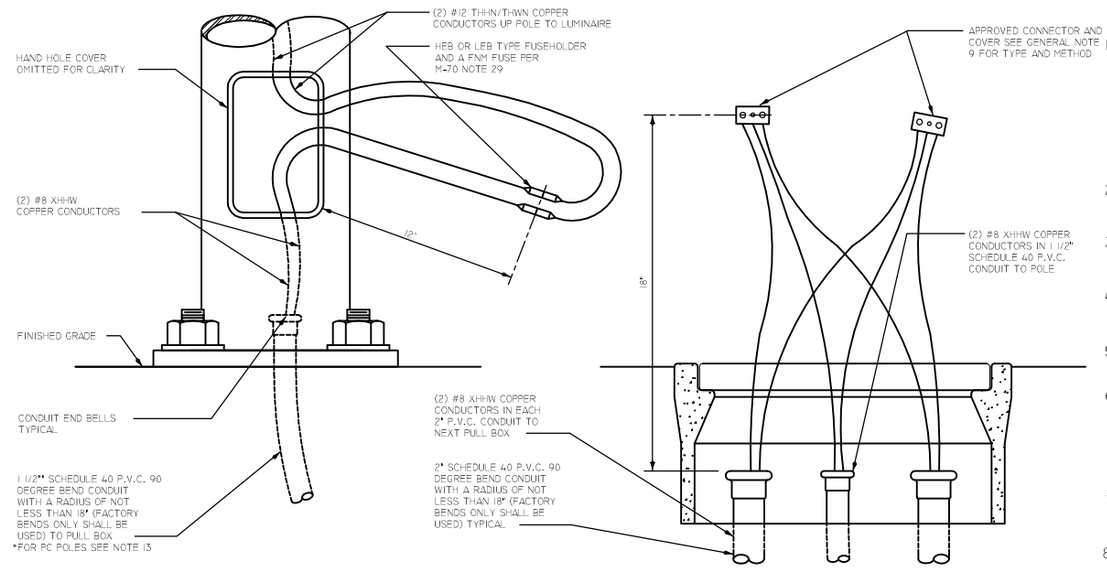

ARTERIAL CURRENT CARRYING DETAIL

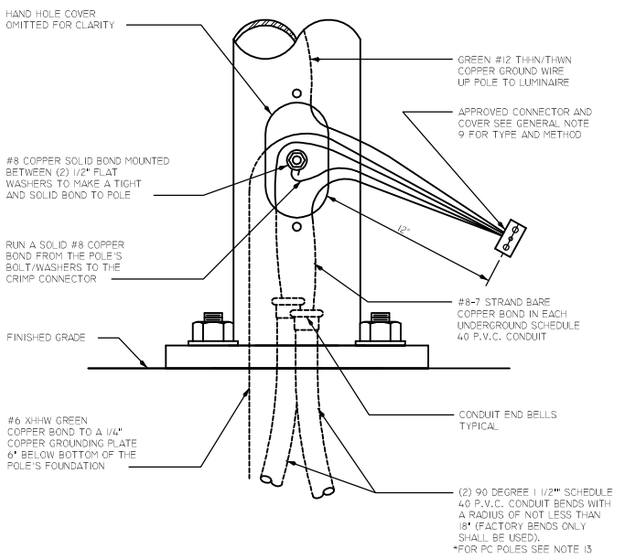

RESIDENTIAL GROUNDING DETAIL

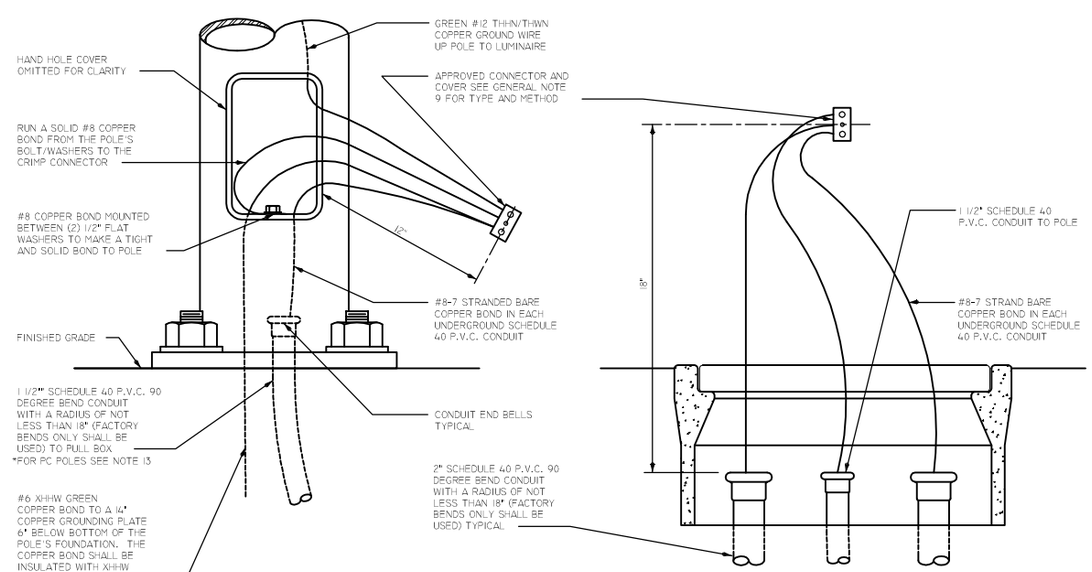

ARTERIAL GROUNDING DETAIL

NOTES:

1. ALL POLES SHALL BE WIRED USING TWO (2) #12 BLACK THHN/THWN 90 DEGREE C STRANDED COPPER CONDUCTORS, 600 VOLT NEC APPROVED (PER LUMINAIRE); AND ONE (1) GREEN #12 THHN/THWN 90 DEGREE C STRANDED COPPER GROUND WIRE, 600 VOLT NEC APPROVED (PER LUMINAIRE). WIRES SHALL RUN FROM THE LUMINAIRE TO A MINIMUM OF TWELVE (12) INCHES BELOW POLE HAND HOLE FOR TERMINATION.
2. ALL STREETLIGHT CONDUCTORS AND BOND WIRES SHALL BE COPPER. ALUMINUM SHALL NOT BE ALLOWED.
3. TWO (2) CONDUCTORS (PER LUMINAIRE) SHALL BE INSTALLED IN P.V.C. CONDUIT FROM HAND HOLE TO PULL BOX.
4. ALL CURRENT CARRYING CONDUCTORS IN CONDUIT SHALL BE INSULATED WITH XHHW INSULATION. MIN. #8
5. ALL P.V.C. CONDUIT RUNS SHALL CONTAIN A MINIMUM #8-7 STRANDED BARE BOND.
6. ALL CONDUCTORS AND BOND WIRES SHALL BE STRANDED, EXCEPT FOR THE SOLID #8 BOND WIRE THAT RUNS FROM THE POLE'S BOLT/WASHER TO THE CRIMP CONNECTOR. THE BOND WIRE IN THE CONCRETE FOUNDATION SHALL BE A #6 XHHW GREEN INSULATED COPPER STRANDED WIRE.
7. ALL POLE FOUNDATIONS SHALL HAVE A FOURTEEN (14) INCH COPPER GROUNDING PLATE. (M-73.06)
8. EACH LUMINAIRE SHALL BE FUSED BEHIND THE POLE'S HAND HOLE COVER USING A HEB, OR LEB TYPE FUSE HOLDER WITH RUBBER INSULLATING BOOTS. ACCORDING TO M-70 NOTE 29.
9. ALL SPLICES, INCLUDING GROUNDS AND BONDS, SHALL BE DONE WITH A GEL CAP STUB SPLICE KIT, # GELCAP -SL- 2/0-3 HOLE, OTHER GEL CAP PRODUCTS OF APPROPRIATE SIZE, OR APPROVED EQUAL.
10. WIRE PULLING COMPOUND SHALL BE USED WHEN PULLING WIRE IF NEEDED.
11. EACH CONDUIT RUN INTO A PULL BOX OR LIGHTING CONTROL CABINET SHALL HAVE AN END BELL, AND A MINIMUM OF THIRTY-SIX (36) INCHES OF SLACK IN THE WIRE FROM END BELL TO END BELL IN THE SAME PULL BOX.
12. CONDUIT END BELLS SHALL BE INSTALLED BEFORE PULLING WIRE.
13. ALL CONDUIT CONTAINING PC CIRCUIT SHALL HAVE 14-3 FRTC FROM CABINET TO P.C. POLE WITHOUT A SPLICE.

NOT TO SCALE

mesa·az

CURRENT CARRYING AND GROUNDING SPECIFICATION

DETAIL NO. M-73.07

REV. 01/14/15

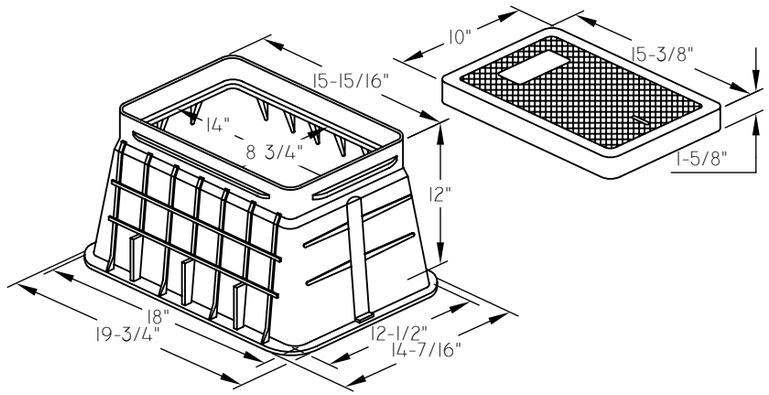

FL09
NUMBER 3 1/2 BOX

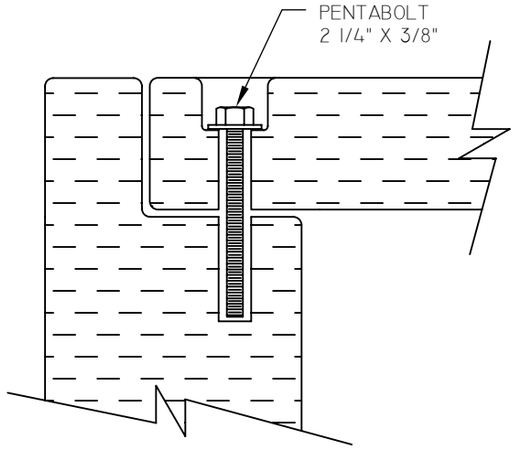

HOLD DOWN BOLT DETAIL

NOTES

1. THE BOX SHALL BE A FIBRELYTE BOX FOR #3 1/2 FL09 BOX, FOR #5 1/2 FL30 BOX WITH END AND SIDE KNOCKOUTS, AND NON-SETTLING SHOULDERS TO MAINTAIN GRADE. THE BOX SHALL BE MANUFACTURED WITH APPROXIMATE DIMENSIONS AS SHOWN.

2. COVER LETTERING SHALL BE 1" LETTERS CAST IN STANDARD MARKINGS: STREET LIGHTING

PULL BOX #	DATA TABLE
PB-101	#3 1/2 BOX WITH FL09T LID
PB-102	#3 1/2 BOX WITH FL09T LID "B"
PB-103	#5 1/2 BOX WITH FIBRELYTE LID "B"
PB-104	#5 1/2 BOX WITH FL30T LID "A"

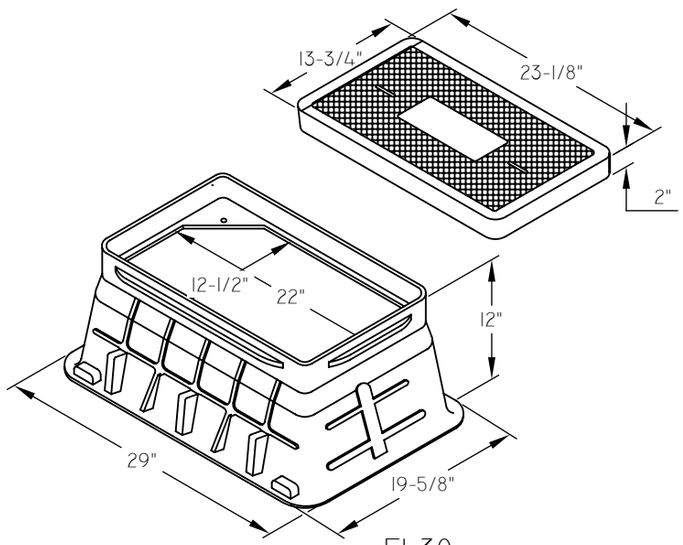

FL30
NUMBER 5 1/2 BOX

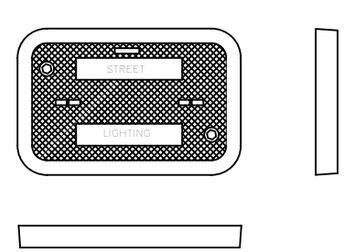

FL09T

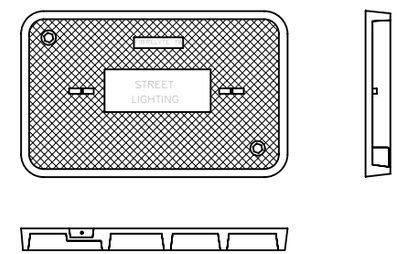

FL30T

LID "A" FIBRELYTE LID WITH HOLD DOWN BOLTS
LID "B" CAST IRON WITH HOLD DOWN BOLTS

OPTIONAL PULL BOX LIDS

NOT TO SCALE

mesa·az

PULL AND JUNCTION BOX SPECIFICATION

DETAIL NO.
M-74.01

REV. 01/31/14

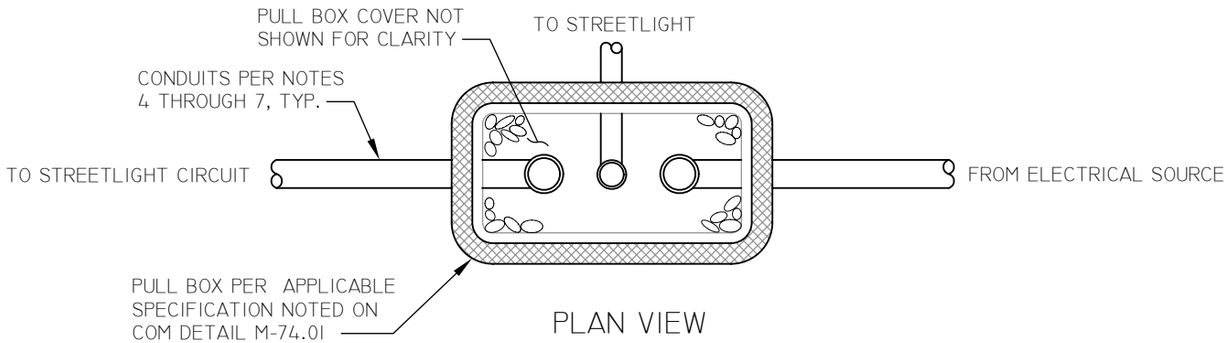

PLAN VIEW

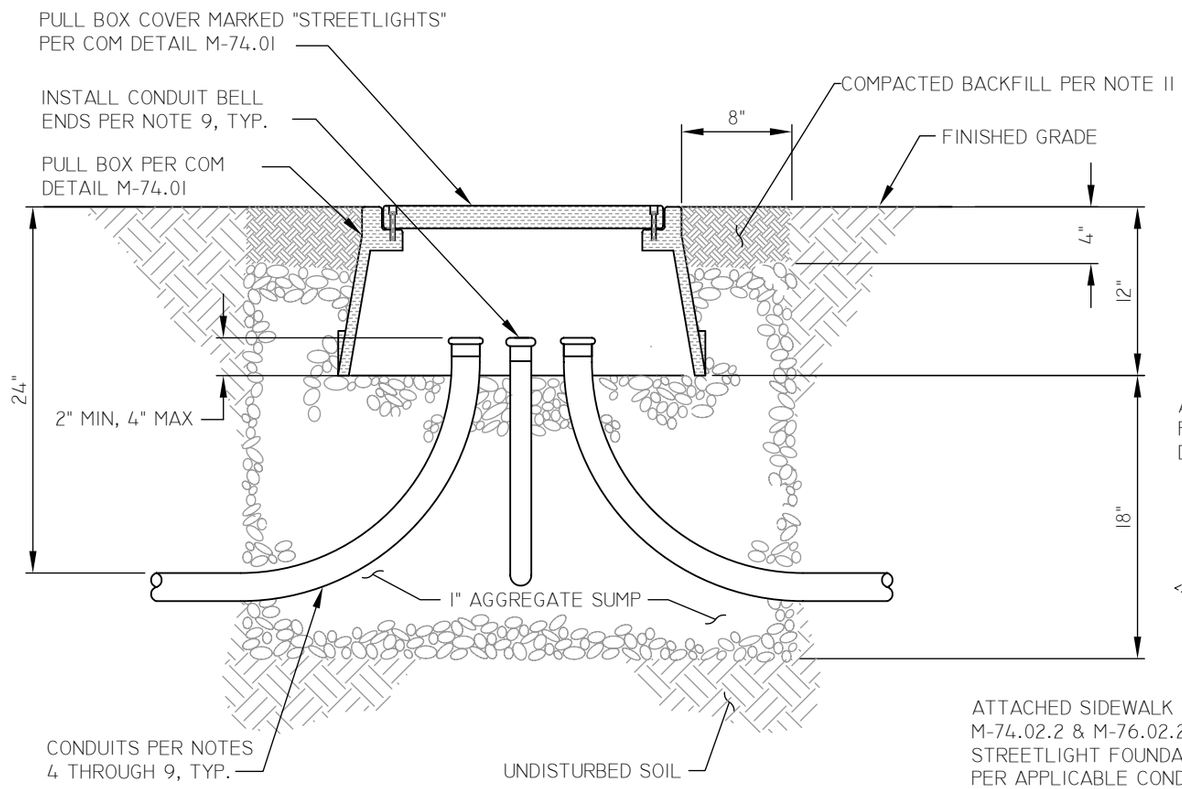

SECTION

INSTALLATION NOTES

1. PULL/JUNCTION BOXES SHALL BE LOCATED CENTERED PER COM DETAIL DIMENSIONS FROM A STREETLIGHT POLE AS SHOWN BELOW, UNLESS OTHERWISE DETERMINED BY CITY FORCES.
2. PULL/JUNCTION BOXES INSTALLED ALONG A SIDEWALK SHALL BE 12" FROM SIDEWALK WITH MATCHING GRADE UNLESS OTHERWISE DETERMINED BY CITY FORCES.
3. PULL/JUNCTION BOXES SHALL BE INSTALLED IN COMPLIANCE FOR SIDEWALK OR MEDIAN CONDITIONS SHOWN ON COM DETAIL M-74.02.2
4. ALL CONDUIT SHALL BE SCHEDULE 40 P.V.C. MANUFACTURED WITH A FACTORY 90 DEGREE BEND AND A RADIUS OF NOT LESS THAN 18".
5. ARTERIAL CIRCUITS SHALL ONLY USE 2" CONDUIT.
6. NON-ARTERIAL/RESIDENTIALCIRCUITS SHALL ONLY USE 1-1/2" CONDUIT.
7. THE CONNECTION TO A STREETLIGHT SHALL USE 1-1/2" CONDUIT.
8. CONDUITS SHALL BE INSTALLED TO APPROXIMATE CENTERS OF PULL AND JUNCTION BOXES.
9. CONDUIT BELL ENDS SHALL BE INSTALLED BEFORE PULLING WIRE.
10. 1" AGGREGATE SHALL BE INSTALLED IN DRAINAGE SUMP AS SHOWN.
11. BACKFILL SHALL CONSIST OF EXCAVATED MATERIALS AND SHALL BE COMPACTED PER MAG STANDARD SPECIFICATION 601.

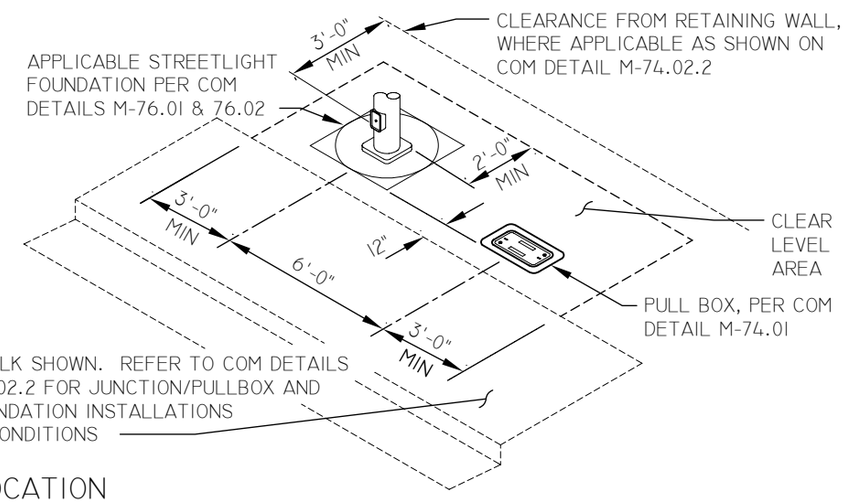

PULL BOX LOCATION

NOT TO SCALE

mesa·az

PULL AND JUNCTION BOX INSTALLATION SPECIFICATION

DETAIL NO. M-74.02.1

REV. 01/31/14

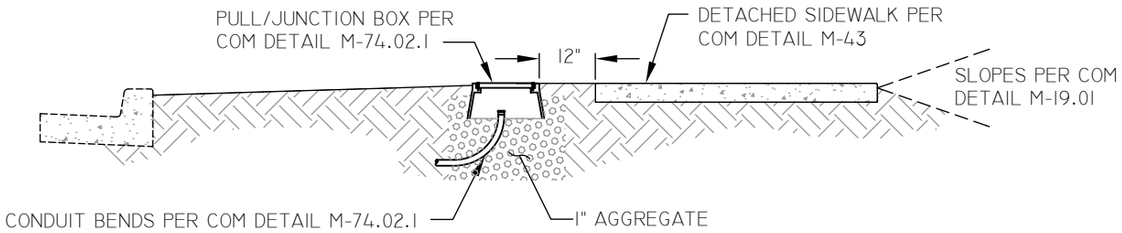

INSTALLATION AT DETACHED SIDEWALK

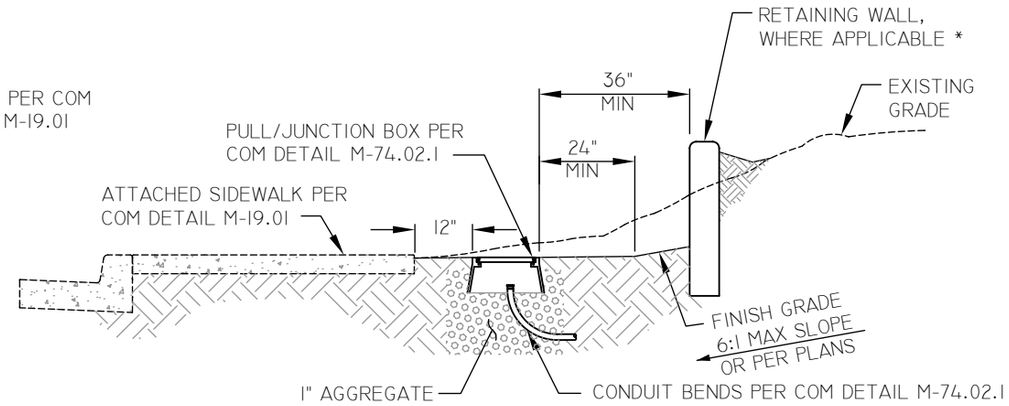

INSTALLATION AT SIDEWALK TO UPWARD SLOPE

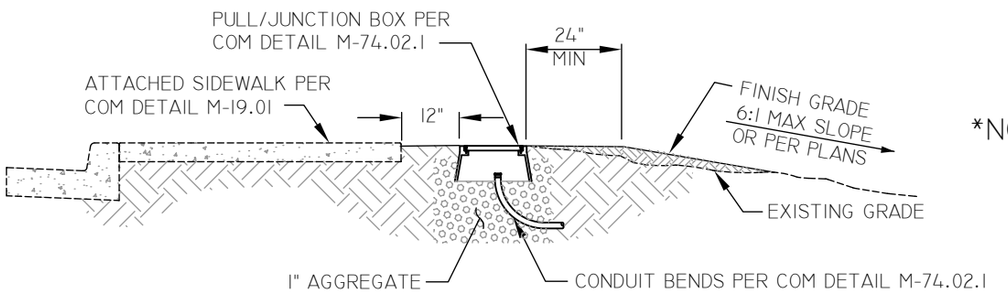

INSTALLATION AT SIDEWALK TO DOWNWARD SLOPE

*NOTE A RETAINING WALL:

- IS REQUIRED IN AREAS OF FLOOD IRRIGATION
- IS REQUIRED WHERE A NEW 6:1 UPWARD SLOPE WILL NOT MEET THE EXISTING GRADE
- SHALL BE LOCATED FOR 36" MIN. CLEARANCE FROM LCC CABINET
- SHALL HAVE A DEPTH OF 10" MIN. BELOW SIDEWALK GRADE
- HAVE A SMOOTH TROWELED FINISH AND 1/2" RADIUS CHAMFERS ALONG TOP EDGES
- BE BACKFILLED WITH EXCAVATED MATERIALS AND COMPACTED PER MAG STANDARD SPECIFICATION 601.
- SHALL EXTEND A MINIMUM OF 6-FEET EITHER SIDE OF THE PULL BOX.

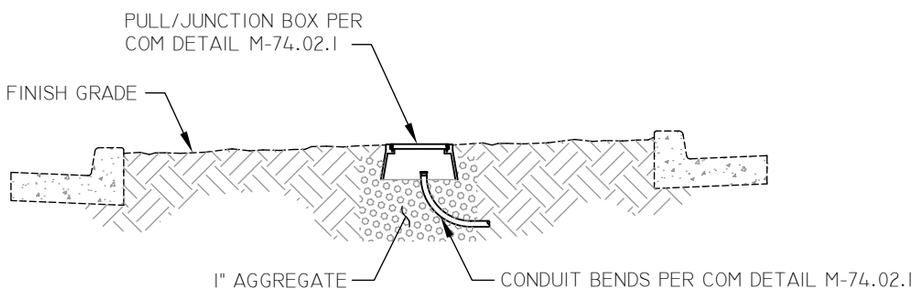

INSTALLATION IN UNPAVED MEDIAN

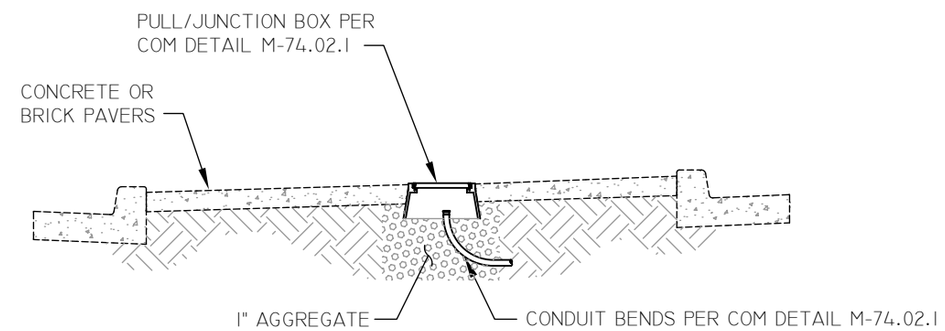

INSTALLATION IN PAVED MEDIAN

PULL/JUNCTION BOX AND INSTALLATION CONDITIONS

NOT TO SCALE

mesa·az

PULL AND JUNCTION BOX INSTALLATION SPECIFICATION

DETAIL NO.
M-74.02.2

REV. 01/31/14

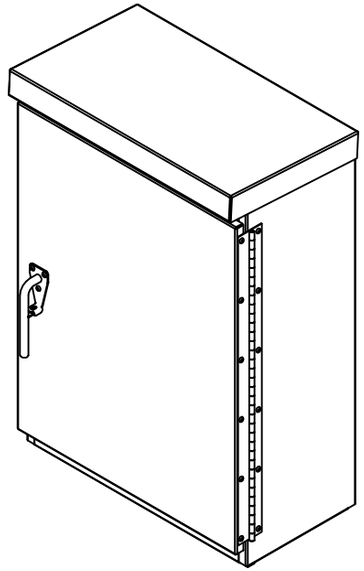

C-103 LIGHTING CONTROL CABINET

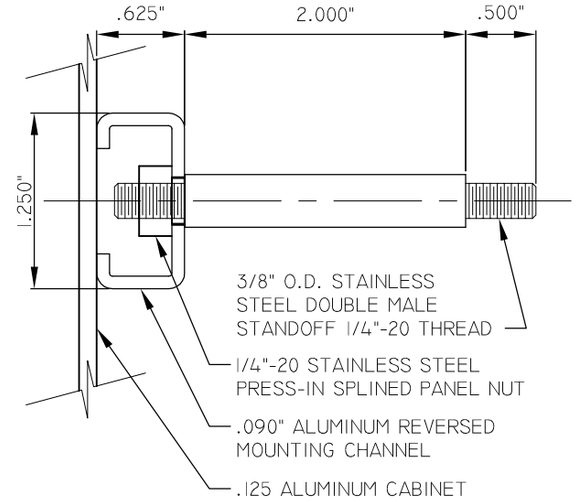

MOUNTING CHANNEL DETAIL

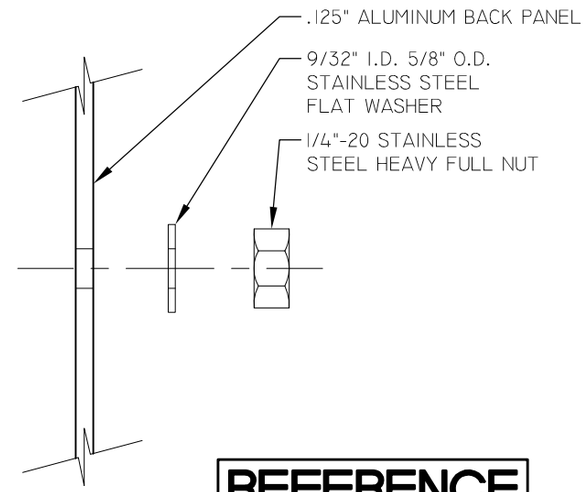

REFERENCE ONLY

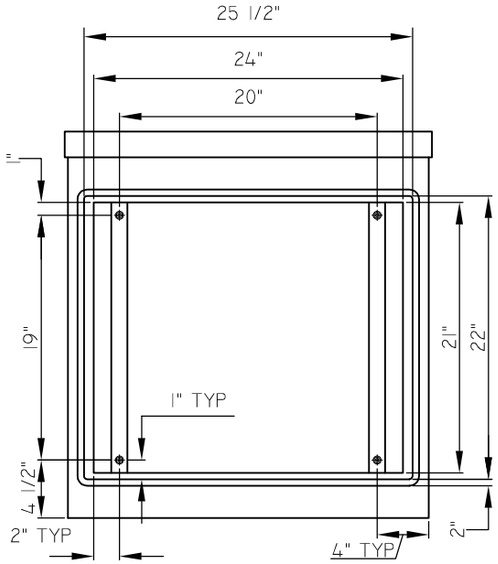

OPENING

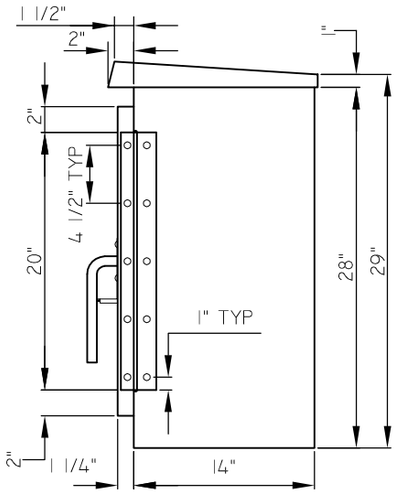

SIDE VIEW

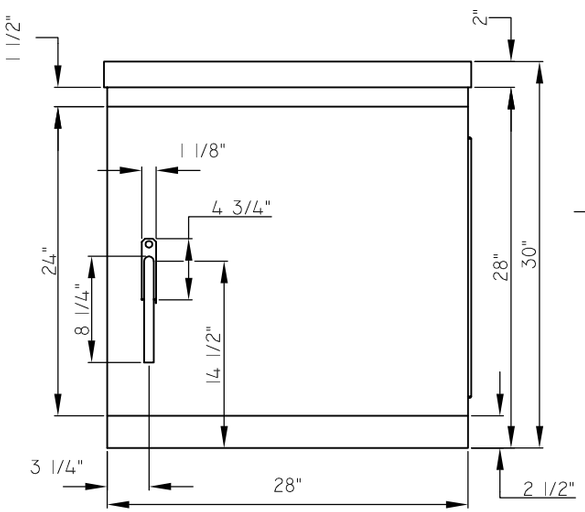

FRONT VIEW

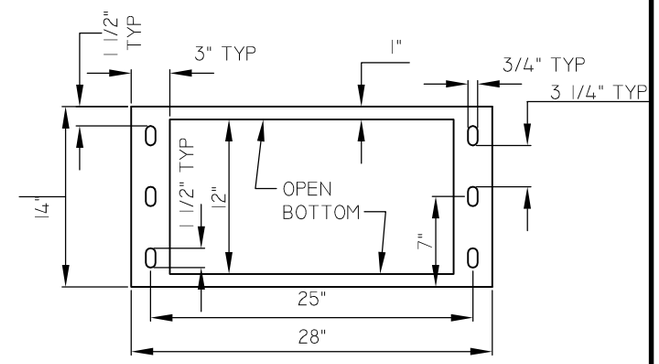

MOUNTING PATTERN

REFER TO CABINET C-113 AFTER FEBRUARY 2010

SEE M-75.01.1C FOR REFERENCED NOTES

NOT TO SCALE

mesa·az

C-103 LIGHTING CONTROL CABINET SPECIFICATION

DETAIL NO.
M-75.01.1A

REV. 12/01/2014

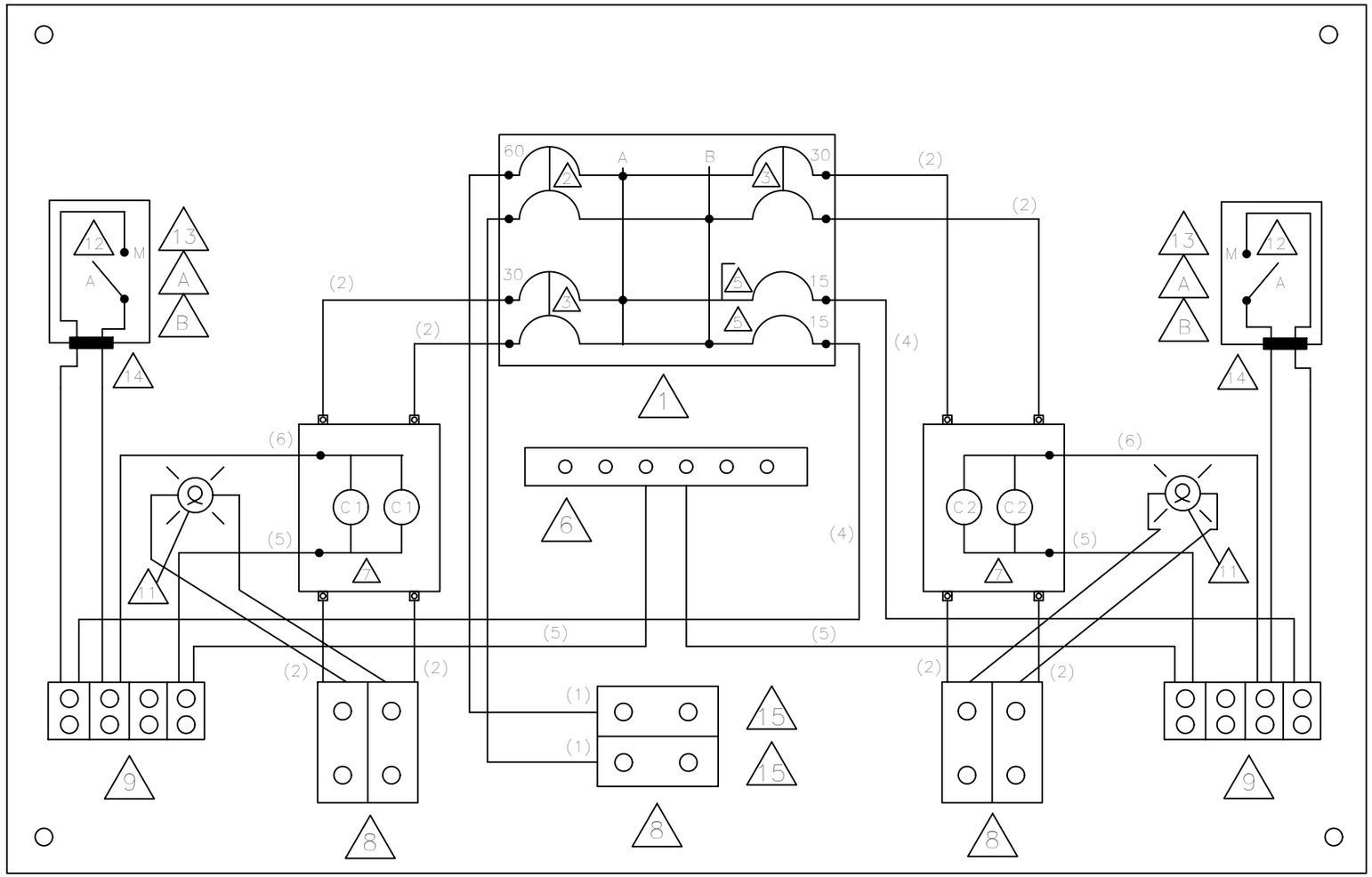

BACKER PLATE

SEE M-75.01.1C FOR REFERENCED NOTES

AWG THHN	(1)	(2)	(3)	(4)	(5)	(6)	(7)	(8)	(9)
#4 BLK	x								
#6 BLK		x							
#8 BLK			x						
#12 BLK				x					
WHT					x				
RED						x			
BLU							x		
GRN								x	
#14 RED									x

1. CIRCUIT BREAKER PANEL GE TLM 812 FCUD
2. GE BREAKER 2P60 THQL 2160
3. GE BREAKER 2P30 THQL 2130 HID
4. GE BREAKER 1/2 INCH IP 15 THQP 115
5. GE BREAKER IP 15 THQL 1115
6. NEUTRAL BAR (FROM 1 ABOVE)
7. CONTACTOR 30A MECHANICAL EATON A202K1BA, 2P
8. SPLICES/REDUCERS-AL/CU BURNDY BDB-11-2/0-2
9. TERMINAL BOARD 20A-150V GE CR151B4
10. GFCI-15AMP-NEMA CONFIGURATION 5-15R LEVITON 1VJX3 (OR EQUAL)
11. NEON MINATURE INDICATOR LIGHT-RED CHICAGO MINATURE #2151A1
12. 15A 120/277 SINGLE POLE SWITCH PASS SEYMOUR CS15AC1-W
13. HANDY BOX W/COVER
A. BOX: STEEL CITY 2-1/2" D #58371-1/2
B. COVER: STEEL CITY 58C30
14. KNOCK OUT BUSHING ½" TOPAZ SB8751I
15. SPLICE/REDUCER COVER BURNDY BDBCOVER2

mesa·az

C-103 WIRING DIAGRAM

DETAIL NO.
M-75.01.1B

REV. 01/14/2015

CABINET REQUIREMENTS

GENERAL

THE MANUFACTURER MUST BE ABLE UPON REQUEST TO PRODUCE PART NUMBERS ON ALL COMPONENTS FOR REPAIR PURPOSES. CERTIFICATES OF COMPLIANCE MAY BE REQUESTED ON EACH CABINET OR ON ANY COMPONENT OR PART THEREOF.

PERFORMANCE

THE ENCLOSURE WILL MEET OR EXCEED THE REQUIREMENTS OF A NEMA 3R RATING AND SHALL BE U.L. LISTED.

CABINET CONSTRUCTION

GENERAL

THE CABINET AND DOOR SHALL BE CONSTRUCTED FROM 5052-H32 SHEET ALUMINUM ALLOY WHICH HAS A THICKNESS OF .125''. EXTERNAL AND INTERNAL WELDS SHALL BE MADE USING THE HELIARC WELDING METHOD. ALL WELDS SHALL BE NEATLY FORMED AND FREE OF CRACKS, BLOW HOLES AND OTHER IRREGULARITIES.

ALL INSIDE AND OUTSIDE EDGES OF THE CABINET SHALL BE FREE OF BURRS.

THE DOOR OPENING SHALL BE DOUBLE FLANGED ON ALL 4 SIDES WHICH INCREASES STRENGTH AROUND OPENINGS AND KEEPS DIRT AND LIQUIDS FROM ENTERING THE ENCLOSURE WHEN DOOR IS OPENED.

A DOOR RESTRAINT SHALL BE PROVIDED TO PREVENT DOOR MOVEMENT WHEN OPENED IN WINDY CONDITIONS.

DOOR/HARDWARE

THE DOOR SHALL BE FURNISHED WITH A GASKET THAT SATISFIES THE PHYSICAL PROPERTIES AS FOUND IN UL508 TABLE 21.1 AND SHALL FORM A WEATHER-TIGHT SEAL BETWEEN THE CABINET AND DOOR.

THE HINGE SHALL BE CONTINUOUS AND BOLTED TO THE CABINET AND DOOR UTILIZING 1/4''-20 300 SERIES STAINLESS STEEL CARRIAGE BOLTS AND 300 SERIES STAINLESS STEEL NY-LOCK NUTS.

THE HINGE WILL BE MADE OF .075-14 GAUGE 300 SERIES STAINLESS STEEL AND SHALL HAVE A 3'' OPEN WIDTH WITH A .250'' DIAMETER 300 SERIES STAINLESS STEEL HINGE PIN.

THE HINGE PIN SHALL BE CAPPED TOP AND BOTTOM BY WELD TO RENDER IT TAMPER PROOF.

ALL BOLT HOLES SHALL BE GASKETED TO MEET OR EXCEED THE REQUIREMENTS OF A NEMA 4X RATING.

A POCKET, 6.00" HIGH X 15.00" LONG X .750" DEEP, WITH BOTH ENDS OPEN, SHALL BE WELDED TO THE INSIDE OF THE DOOR.

THE LATCHING MECHANISM SHALL BE A 3-POINT DRAW ROLLER TYPE.

THE CENTER CATCH SHALL BE 300 SERIES STAINLESS STEEL PLATE

PUSHRODS WILL BE TURNED EDGEWISE AT THE OUTWARD SUPPORTS AND SHALL BE .250'' X .750'' ALUMINUM.

ROLLERS SHALL HAVE A MINIMUM DIAMETER OF .875'' AND WILL BE MADE OF DELRIN. THE CENTER CATCH SHALL BE FABRICATED FROM .115'' STAINLESS STEEL, MINIMUM.

AN OPERATING HANDLE SHALL BE FURNISHED.

THE HANDLE WILL BE 300 SERIES STAINLESS STEEL WITH A 3/4'' DIAMETER SHANK.

THE LATCHING HANDLE SHALL HAVE A PROVISION FOR PADLOCKING IN THE CLOSED POSITION.

ALL PADLOCK HARDWARE SHALL BE MADE OF MINIMUM 11 GAUGE STAINLESS STEEL.

EQUIPMENT MOUNTING

MOUNTING CHANNELS

THE ENCLOSURE SHALL BE EQUIPPED WITH TWO REVERSED ''C'' MOUNTING CHANNELS WELDED TO THE BACK WALL OF THE ENCLOSURE, WITH (4) 1/4''-20 STAINLESS STEEL PRESS-IN CAPTIVE STUDS. (FHS0420-16)

THE REVERSED MOUNTING CHANNELS WILL BE EQUIPPED WITH ALL MOUNTING HARDWARE NEEDED TO MOUNT ALUMINUM BACK PANEL TO THE (4) 1/4''-20 STAINLESS STEEL PRESS-IN CAPTIVE STUDS (SEE MOUNTING CHANNEL DETAIL).

ALUMINUM BACK PANEL

THE ENCLOSURE SHALL BE EQUIPPED WITH A PREDRILLED AND TAPPED 5052 H32 ALUMINUM BACK PANEL HAVING A THICKNESS OF .125'' (CITY WILL BE PROVIDE A DRILLING AND TAPPING DETAIL).
THE PANEL SHALL BE NATURAL FINISHED, ALL MOUNTING HARDWARE WILL BE FURNISHED.

CABINET FINISH

THE OUTSIDE SURFACE OF THE CABINET SHALL HAVE A SMOOTH, UNIFORMED, NATURAL ALUMINUM FINISH.

CABINET MOUNTING

PAD MOUNT ENCLOSURE

ENCLOSURE SHALL BE CONSTRUCTED TO BE MOUNTED ON CONCRETE PAD (SEE MOUNTING PATTERN FOR DETAILS).

NOTE: FOR NEMA TYPE 4X RATINGS THE CABINET WILL BE BOLTED AND GASKETED WITH A CLOSED CELL NEOPRENE GASKET MATERIAL WITH THE PHYSICAL PROPERTIES AS FOUND IN UL508 TABLE 21.1 AND SHALL FORM A WEATHER-TIGHT SEAL BETWEEN THE CABINET AND CONCRETE PAD.
THE AREA OF THE CABINET WITH THE MOUNTING HOLES SHALL BE REINFORCED TO .375" THICKNESS ON THE INSIDE.

APPROVED MANUFACTURER

CABINET IS TO BE MANUFACTURED BY AN APPROVED U.L. LISTED MANUFACTURER.

REFERENCE ONLY

mesa·az

C-103 CABINET REQUIREMENTS

DETAIL NO.
M-75.01.1C

REV. 12/01/2014

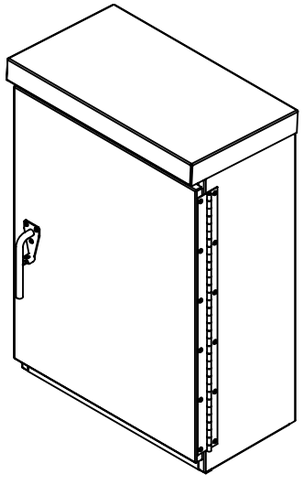

C-113 LIGHTING CONTROL CABINET

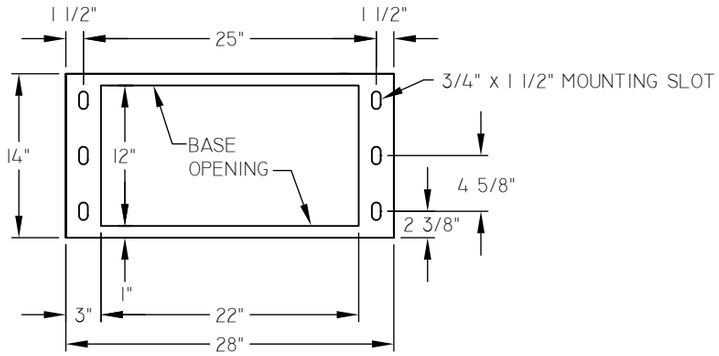

CABINET BASE AND MOUNTING DIMENSIONS

SEE COM DETAIL M-75.02.1 FOR PAD DIMENSIONS

INSTALLATION

LOCATION

LOCATE WITH OTHER STREETLIGHT EQUIPPING APPURTENANCES PER SEPARATION DISTANCES NOTED IN COM DETAILS M-75.03 AND M-75.04

BASE PAD & CONDUIT

INSTALL WITH PAD & CONDUIT IN PLACE PER COM DETAILS M-75.02.1 AND M-75.02.2

CONDITIONS

INSTALL IN MEDIAN OR ALONG STREET PER APPLICABLE CONDITION SHOWN ON COM DETAIL M-75.02.3

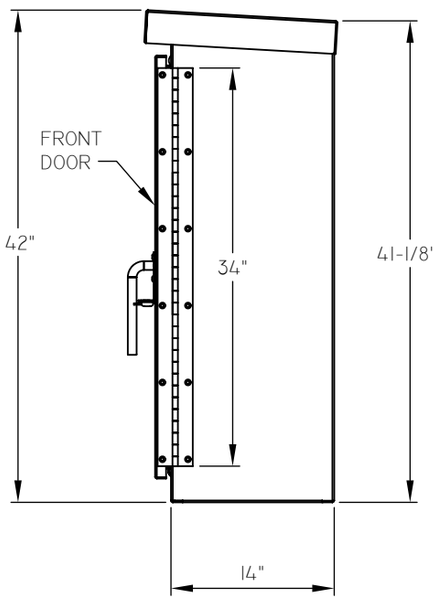

SIDE VIEW

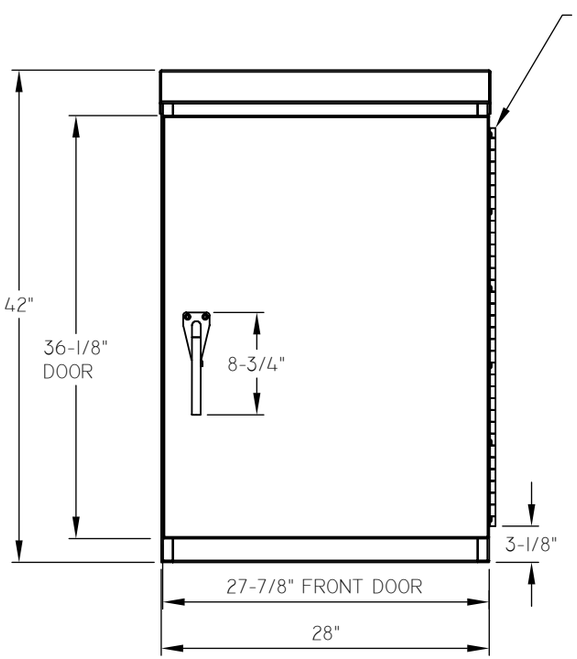

FRONT VIEW

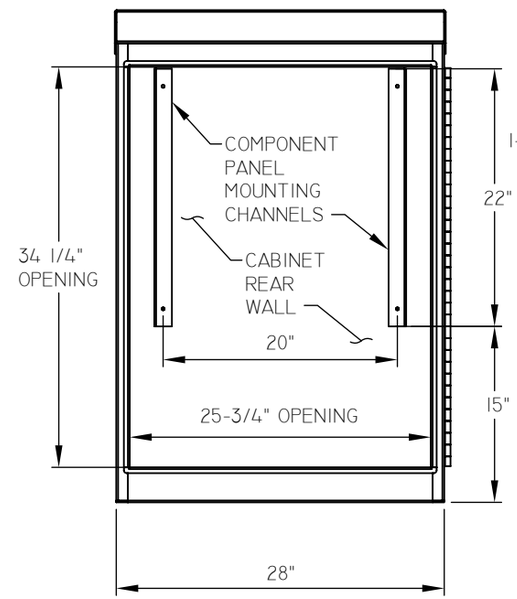

VIEW WITH FRONT DOOR OPENED AND DEAD DOOR REMOVED

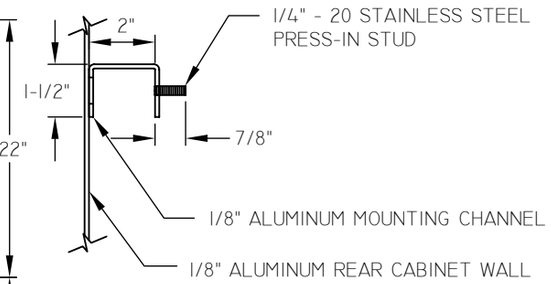

MOUNTING CHANNEL DETAIL

SEE COM DETAIL M-75.01.2B FOR COMPONENT PANEL

SEE M-75.01.2D FOR REFERENCED NOTES

NOT TO SCALE

C-113 LIGHTING CONTROL CABINET DETAILS

DETAIL NO. M-75.01.2A

REV. 01/31/14

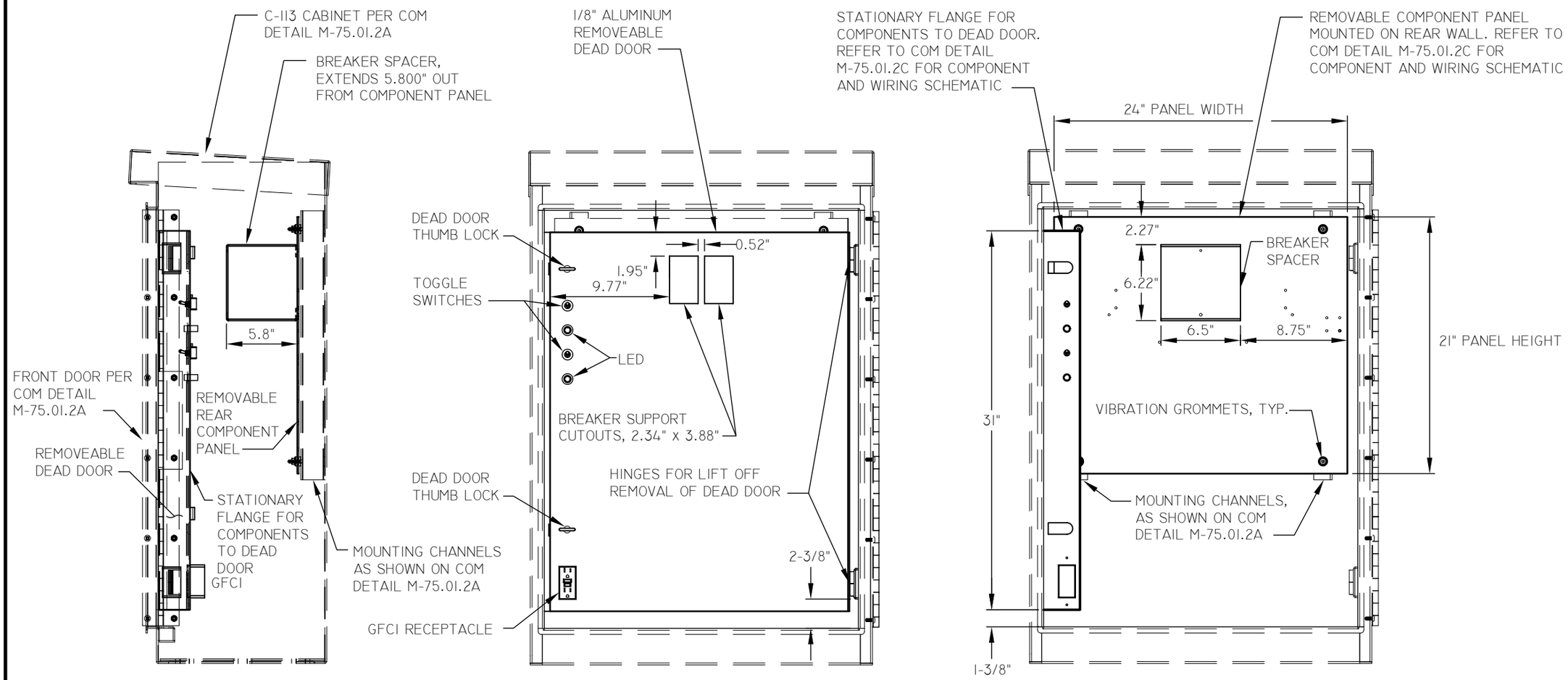

SIDE SECTION

COMPONENT PUNCHOUTS THROUGH DEAD DOOR PANEL

COMPONENT & CIRCUITRY MOUNTING SURFACES

- FLANGE TO DEAD DOOR
- PANEL ON REAR WALL

SEE M-75.01.2D FOR REFERENCED NOTES

NOT TO SCALE

mesa·az

C-113 CABINET INTERIOR COMPONENTS

DETAIL NO. M-75.01.2B

REV. 01/31/2014

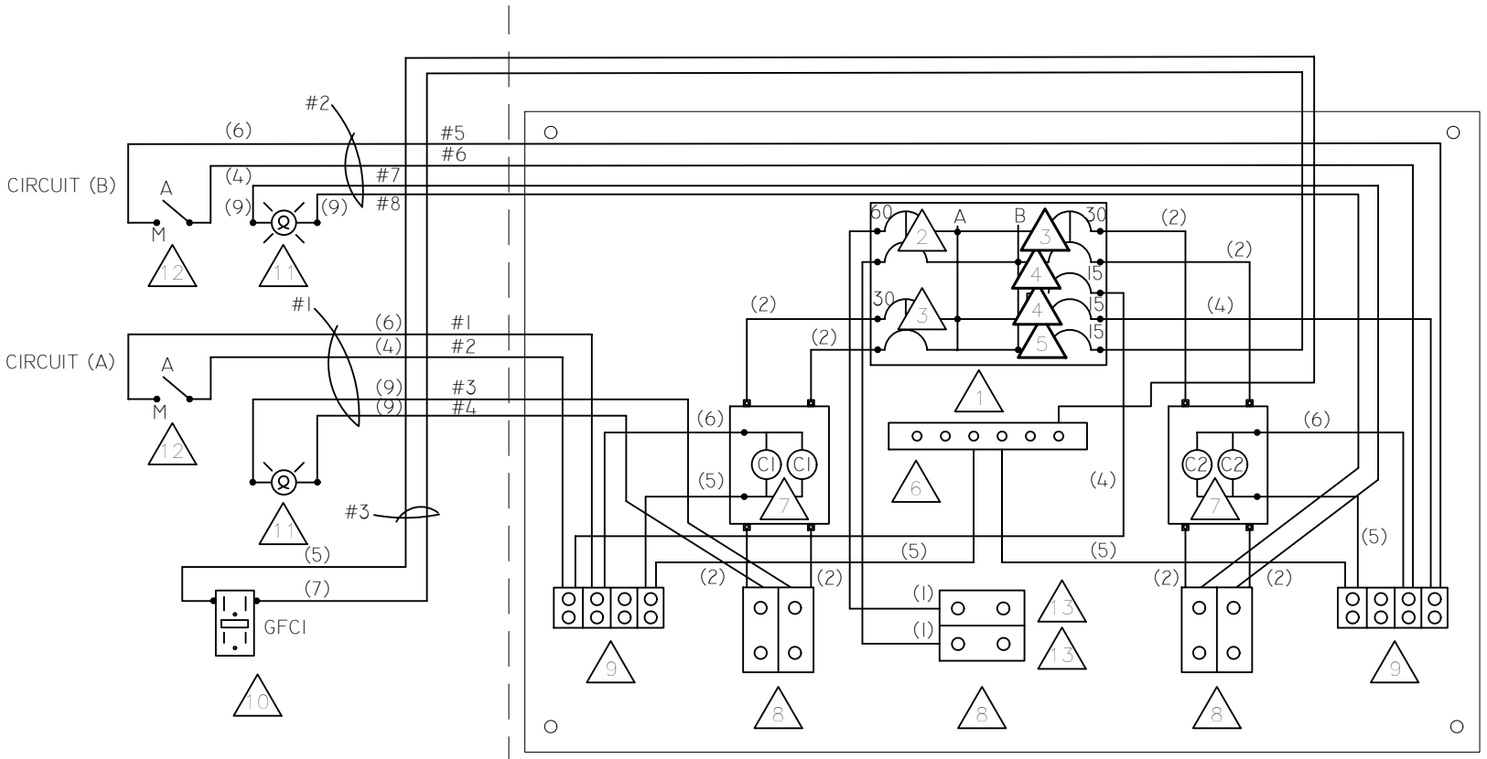

AWG THHN	(1)	(2)	(3)	(4)	(5)	(6)	(7)	(8)	(9)
#4 BLK	X								
#6 BLK		X							
#8 BLK			X						
#12 BLK				X					
WHT					X				
RED						X			
BLU							X		
GRN								X	
#14 RED									X

1. CIRCUIT BREAKER PANEL GE TLM 812 FCUD
2. GE BREAKER 2P60 THQL 2160
3. GE BREAKER 2P30 THQL 2130 HID
4. GE BREAKER 1/2 INCH IP 15 THQP 115
5. GE BREAKER IP 15 THQL 1115
6. NEUTRAL BAR, FROM 1 ABOVE
7. CONTACTOR 30A MECHANICAL EATON A202K1BA, 2PLTGOPN
8. SPLICES/REDUCERS-AL/CU BURNDY BDB-11-2/0-2
9. TERMINAL BOARD 20A-150V GE CR151B4
10. GFCI-15AMP-NEMA CONFIGURATION 5-15R LEVITON 1VJX3 (OR EQUAL)
11. NEON MINATURE INDICATOR LIGHT-RED CHICAGO MINATURE #2151A1
12. TOGGLE SWITCH-20AMP RATED-1/2" Ø MOUNT HOLE SPST-ON/OFF, HUBBELL #HBL11, OR EQUAL
13. SPLICER/REDUCER COVER BURNDY BDBCOVER2

SEE M-75.01.2D FOR REFERENCED NOTES

NOTE

REFER TO COM DETAIL M-75.03 FOR 240 VOLT SERVICE TO LCC SCHEMATIC AND COM DETAIL M-75.02.2 FOR GROUND ROD AND CONDUIT PENETRATIONS THROUGH LCC PAD

NOT TO SCALE

mesa·az

C-113 WIRING DIAGRAM

DETAIL NO. M-75.01.2C

REV. 01/14/2015

GENERAL REQUIREMENTS

EACH CABINET AND ALL COMPONENTS SHALL BE PER CITY OF MESA APPROVED PRODUCTS LIST. THE CABINET SHALL BE PROVIDED COMPLETE WITH ALL COMPONENTS NOTED ON COM DETAILS M-75.01.2A AND M-75.01.2B AND SHALL INCLUDE ALL WIRING PER DIAGRAM SHOWN ON COM DETAIL M-75.01.2C. MANUFACTURERS SHALL BE REQUIRED TO PRODUCE PART NUMBERS FOR ALL COMPONENTS SO THAT PARTS CAN BE REQUESTED WHENEVER REPAIRS ARE NECESSARY. CERTIFICATES OF COMPLIANCE MAY BE REQUESTED ON EACH CABINET OR ON ANY COMPONENT OR PART THEREOF.

CABINET CONSTRUCTION

THE ENCLOSURE SHALL MEET OR EXCEED THE REQUIREMENTS OF A NEMA 3R RATING AND SHALL BE U.L. LISTED.

THE CABINET AND FRONT DOOR, AS SHOWN ON COM DETAIL M-75.01.2A, SHALL BE CONSTRUCTED FROM 5052-H32 SHEET ALUMINUM ALLOY WHICH HAS A THICKNESS OF .125''. EXTERNAL AND INTERNAL WELDS SHALL BE MADE USING THE HELIARC WELDING METHOD. ALL WELDS SHALL BE NEATLY FORMED AND FREE OF CRACKS, BLOW HOLES AND OTHER IRREGULARITIES.

ALL INSIDE AND OUTSIDE EDGES OF THE CABINET SHALL BE FREE OF BURRS.

THE FRONT DOOR OPENING SHALL BE DOUBLE FLANGED ON ALL 4 SIDES WHICH INCREASES STRENGTH AROUND OPENINGS AND KEEPS DIRT AND LIQUIDS FROM ENTERING THE ENCLOSURE WHEN DOOR IS OPENED.

A FRONT DOOR RESTRAINT SHALL BE PROVIDED TO PREVENT DOOR MOVEMENT WHEN OPENED IN WINDY CONDITIONS.

THE OUTSIDE SURFACE OF THE CABINET AND FRONT DOOR SHALL HAVE A SMOOTH AND UNIFORM NATURAL ALUMINUM FINISH.

MOUNTING CHANNELS ON REAR WALL FOR COMPONENT PANEL

THE ENCLOSURE SHALL BE EQUIPPED WITH TWO REVERSED ''C'' MOUNTING CHANNELS WELDED TO THE INSIDE REAR WALL OF THE ENCLOSURE, WITH (4) 1/4''-20 STAINLESS STEEL PRESS-IN CAPTIVE STUDS, FHS0420-16.

THE REVERSED MOUNTING CHANNELS SHALL BE EQUIPPED WITH ALL MOUNTING HARDWARE AS NEEDED TO MOUNT REAR COMPONENT PANEL TO (4) 1/4''-20 STAINLESS STEEL PRESS-IN CAPTIVE STUDS PER MOUNTING CHANNEL DETAIL ON COM DETAIL M-75.01.2A.

COMPONENT PANEL MOUNTED ON REAR WALL

THE ENCLOSURE SHALL BE EQUIPPED WITH A REMOVABLE COMPONENT PANEL MOUNTED ON THE CABINET REAR WALL AND FABRICATED FROM 5052 H32 ALUMINUM AND HAVING A THICKNESS OF .125''. THE PANEL SHALL BE PREDRILLED AND TAPPED PER A DETAIL PROVIDED BY THE CITY OF MESA.

FRONT DOOR/HARDWARE

THE DOOR SHALL BE FURNISHED WITH A GASKET THAT SATISFIES THE PHYSICAL PROPERTIES AS FOUND IN UL508 TABLE 21.1 AND SHALL FORM A WEATHER-TIGHT SEAL BETWEEN THE CABINET AND DOOR.

THE HINGE SHALL BE CONTINUOUS AND BOLTED TO THE CABINET AND DOOR UTILIZING 1/4''-20 300 SERIES STAINLESS STEEL CARRIAGE BOLTS AND 300 SERIES STAINLESS STEEL NY-LOCK NUTS.

THE HINGE SHALL BE MADE OF .075-14 GAUGE 300 SERIES STAINLESS STEEL AND SHALL HAVE A 3'' OPEN WIDTH WITH A .250'' DIAMETER 300 SERIES STAINLESS STEEL HINGE PIN.

THE HINGE PIN SHALL BE CAPPED TOP AND BOTTOM BY WELD TO RENDER IT TAMPER PROOF.

ALL BOLT HOLES SHALL BE GASKETED TO MEET OR EXCEED THE REQUIREMENTS OF A NEMA 4X RATING.

A POCKET, 6.00" HIGH X 15.00" LONG X .750" DEEP, WITH BOTH ENDS OPEN, SHALL BE WELDED TO THE INSIDE OF THE DOOR.

THE LATCHING MECHANISM SHALL BE A 3-POINT DRAW ROLLER TYPE. ROLLERS SHALL HAVE A MINIMUM DIAMETER OF .875'' AND WILL BE MADE OF DELRIN.

THE CENTER CATCH SHALL BE 300 SERIES STAINLESS STEEL PLATE AND SHALL BE FABRICATED FROM .115'' STAINLESS STEEL, MINIMUM.

PUSHRODS WILL BE TURNED EDGEWISE AT THE OUTWARD SUPPORTS AND SHALL BE .250'' X .750'' ALUMINUM.

AN OPERATING HANDLE SHALL BE FURNISHED AND SHALL BE FABRICATED FROM 300 SERIES STAINLESS STEEL AND HAVE A 3/4'' DIAMETER SHANK.

THE HANDLE LATCH SHALL HAVE A PROVISION FOR PADLOCKING IN THE CLOSED POSITION. ALL PADLOCK HARDWARE SHALL BE MADE OF MINIMUM 11 GAUGE STAINLESS STEEL.

CABINET BASE MOUNTING

ENCLOSURE BASE SHALL BE MANUFACTURED PER BASE & MOUNTING DIMENSIONS ON COM DETAIL M-75.01.2A FOR MOUNTING ON A CONCRETE PAD PER COM DETAILS M-75.02.1, M-75.02.2 AND M-75.02.3.

THE AREA OF THE CABINET WITH THE MOUNTING HOLES SHALL BE REINFORCED TO .375" THICKNESS ON THE INSIDE.

NOTE: FOR NEMA TYPE 4X RATINGS THE CABINET WILL BE BOLTED AND GASKETED WITH A CLOSED CELL NEOPRENE GASKET MATERIAL WITH THE PHYSICAL PROPERTIES AS FOUND IN UL508 TABLE 21.1 AND SHALL FORM A WEATHER-TIGHT SEAL BETWEEN THE CABINET AND CONCRETE PAD.

mesa·az

C-113 LIGHTING CONTROL CABINET SPECIFICATIONS

DETAIL NO.
M-75.01.2D

REV. 01/31/2014

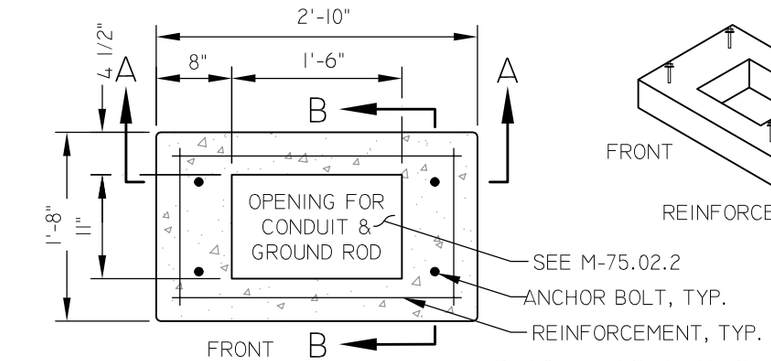

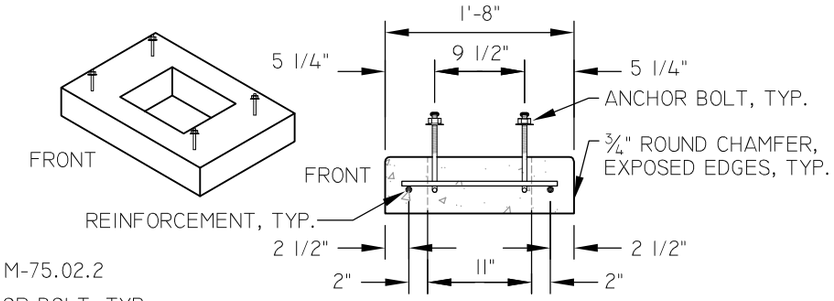

SECTION B
ANCHOR BOLT & REBAR PLACEMENT

C-104 LIGHTING CONTROL CABINET PAD

RE-USE WHERE AN EXISTING CABINET IS REPLACED OR USE FOR NEW INSTALLATIONS ONLY WHERE THE C-105 PAD IS TO LARGE.

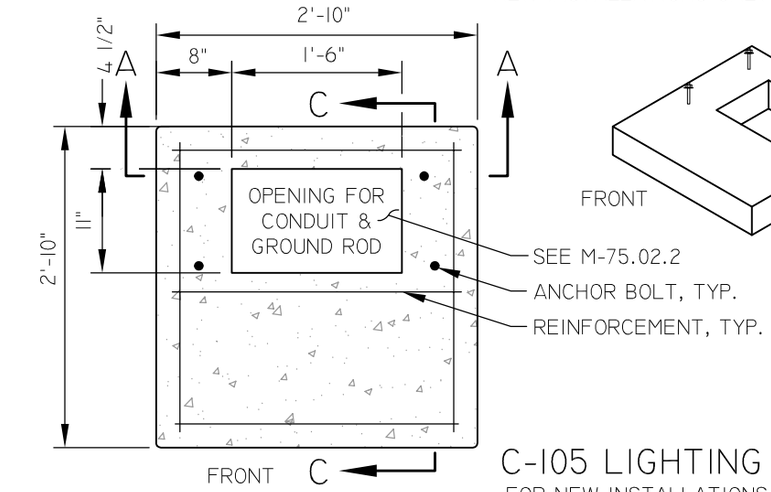

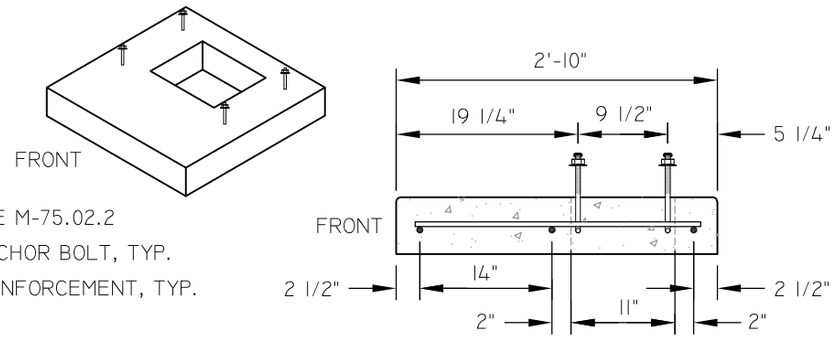

SECTION C
ANCHOR BOLT & REBAR PLACEMENT

C-105 LIGHTING CONTROL CABINET PAD

FOR NEW INSTALLATIONS

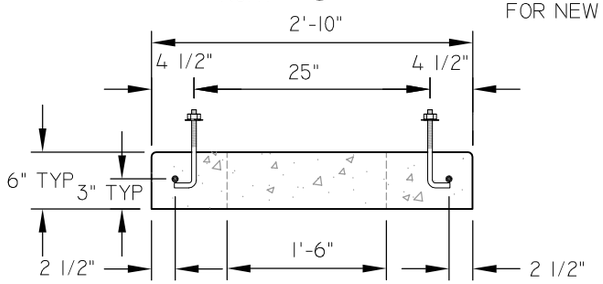

SECTION A
ANCHOR BOLT & REBAR PLACEMENT

PAD MANUFACTURING REQUIREMENTS

THE CONCRETE PAD IS MANUFACTURED TO SUPPORT AND ACCOMMODATE CONNECTIONS TO A LIGHTING CONTROL CABINET (LCC). THE PAD SHALL INCLUDE ANCHOR BOLTS TO MOUNT THE LCC, PER COM DETAIL M-75.01.2A. AN 18" x 11" OPENING ALLOWS FOR CONDUITS AND A GROUNDING ROD PER COM DETAIL M-75.02.2. PADS SHALL BE PRECAST BY AN APPROVED MANUFACTURER PER THE FOLLOWING CRITERIA:

CONCRETE

THE CONCRETE SHALL BE CLASS A, PER MAG STANDARD SPECIFICATION 725.

REINFORCEMENT

EACH PAD SHALL HAVE #4 STEEL REINFORCING, PER MAG STANDARD SPECIFICATION 725 AND AS SHOWN FOR APPLICABLE PAD TYPE.

ANCHOR BOLTS

EACH PAD SHALL BE EQUIPPED WITH (4) 1/2" x 8" STAINLESS STEEL ANCHOR BOLTS WITH HEX NUT AND WASHER, PER MAG STANDARD SPECIFICATION 771.

FINISH

THE CONCRETE SURFACE SHALL HAVE A UNIFORM SMOOTH TROWELED FINISH FREE OF ANY PITS AND BLEMISHES, PER PER MAG STANDARD SPECIFICATION 505. ALL INSIDE AND OUTSIDE EDGES SHALL HAVE A 3/4" ROUND CHAMFER.

INSTALLATION

LOCATION

THE PAD SHALL BE INSTALLED ALONG WITH THE ELECTRIC UTILITY POINT OF DELIVERY (P.O.D.) AND POINT OF SERVICE (P.O.S.) AND LOCATED PER SEPARATION DISTANCES NOTED ON COM DETAIL M-75.03.

PAD TYPE & CONDITIONS

INSTALL IN MEDIAN OR ALONG STREET WITH PAD TYPE AND FRONT ORIENTED PER APPLICABLE CONDITION SHOWN ON COM DETAILS M-75.02.3 AND M-75.03.

FINISH GRADE, CONDUIT & GROUNDING

INSTALL PER COM DETAIL M-75.02.2

NOT TO SCALE

mesa·az

LIGHTING CONTROL CABINET PAD SPECIFICATION AND INSTALLATION

DETAIL NO. M-75.02.1

REV. 01/31/14

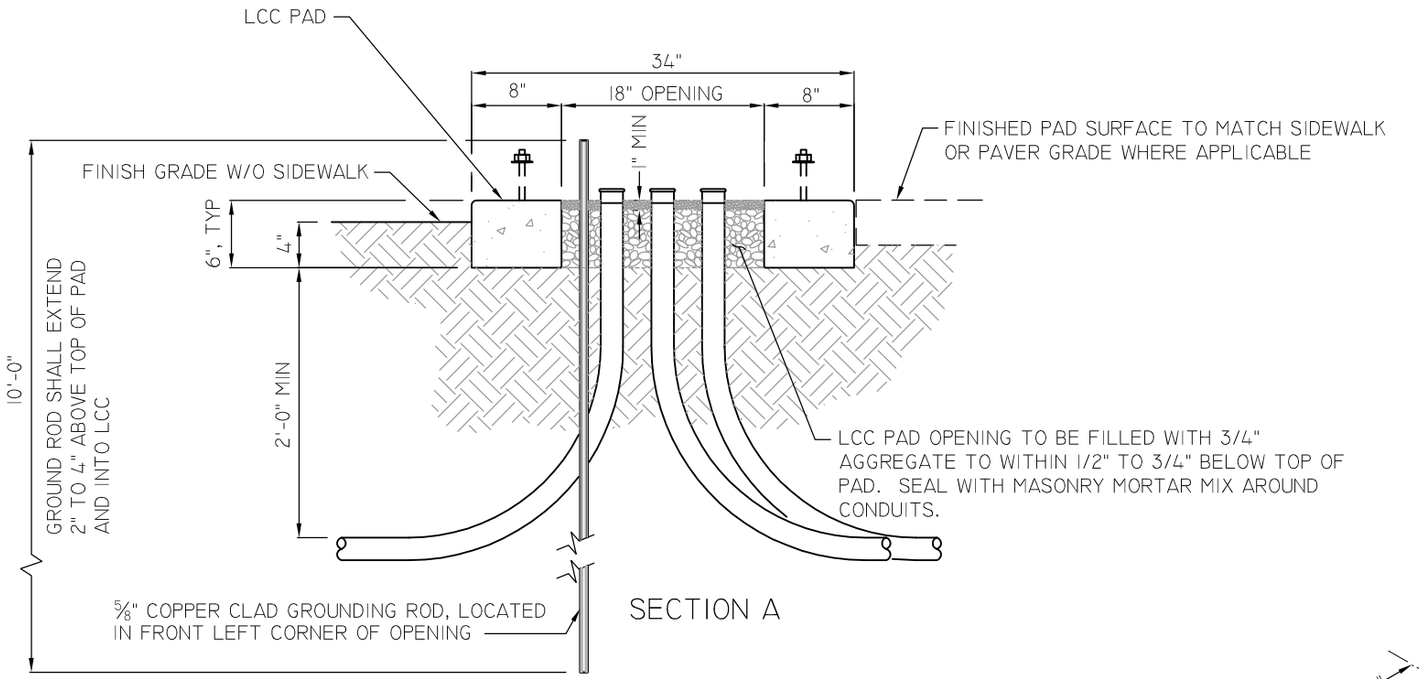

SECTION A

INSTALLATION NOTES

1. LOCATE LIGHTING CONTROL CABINET (LCC) PAD PER REQUIREMENTS OF 240 VOLT SERVICE SCHEMATIC ON COM DETAIL M-75.03 AND PER APPLICABLE CONDITION ON COM DETAIL M-75.02.3.
2. 5/8" COPPER CLAD GROUNDING ROD SHALL BE INSTALLED AS SHOWN AND CONNECTED FROM GROUNDING ROD IN POINT OF SERVICE (P.O.S.) PULLBOX AS PER NOTES ON ON COM DETAIL M-75.03.
3. ALL CONDUIT SHALL BE 2" SCHEDULE 40 P.V.C. AND INCLUDE A 90° BEND WITH RADIUS OF NOT LESS THAN 18" (ONLY FACTORY BENDS SHALL BE USED).
4. CONDUIT END BELLS SHALL BE INSTALLED BEFORE PULLING WIRE.
5. BACKFILL SHALL BE WITH EXCAVATED MATERIALS AND THOROUGHLY COMPACTED PER MAG STANDARD SPECIFICATION 601.
6. AGGREGATE/GROUT SHALL BE INSTALLED AS SHOWN.

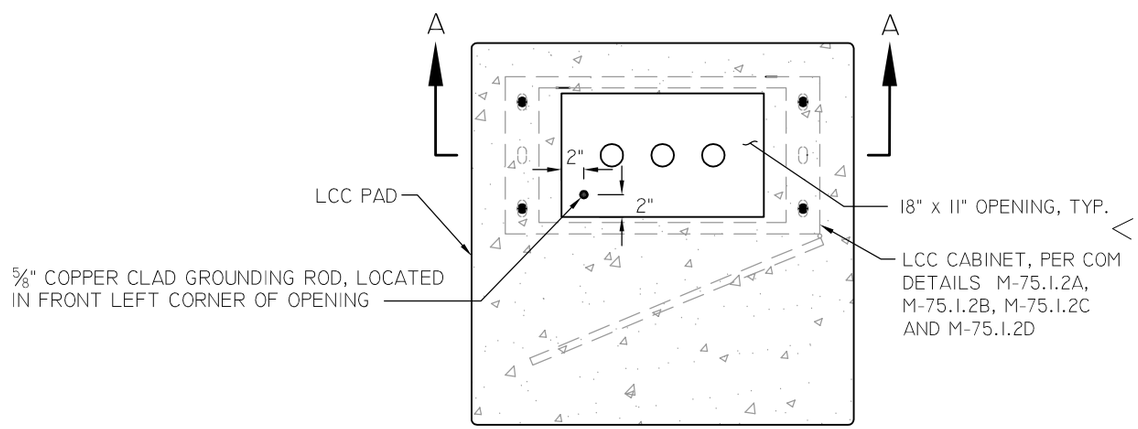

FRONT

LCC PAD, GROUNDING ROD & CONDUIT INSTALLATION

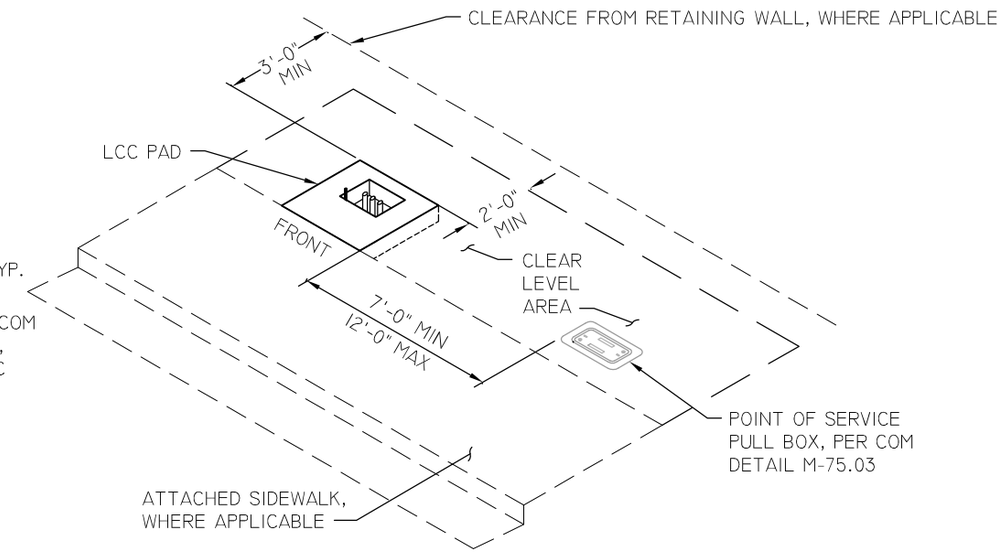

PAD & LCC PAD LOCATION

REFER TO COM DETAIL M-75.02.3 FOR INSTALLATIONS PER APPLICABLE CONDITIONS

NOT TO SCALE

mesa·az

LIGHTING CONTROL CABINET PAD SPECIFICATION AND INSTALLATION

DETAIL NO. M-75.02.2

REV. 01/31/14

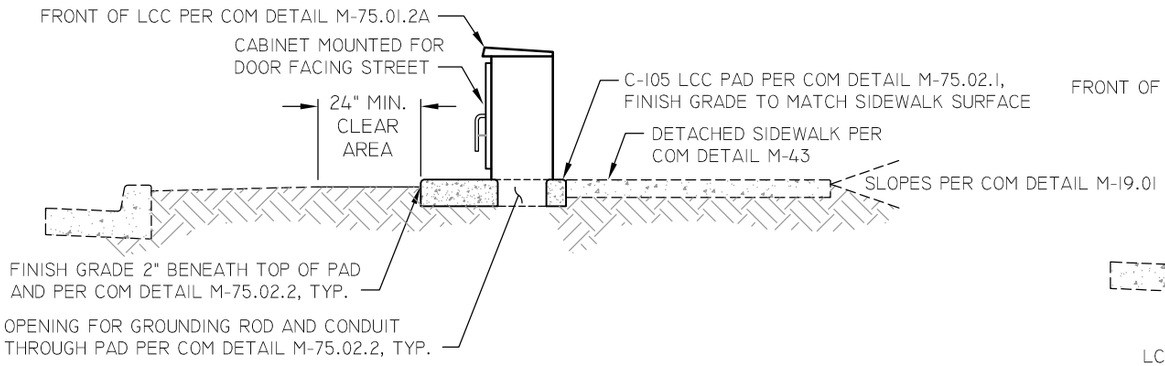

INSTALLATION AT DETACHED SIDEWALK

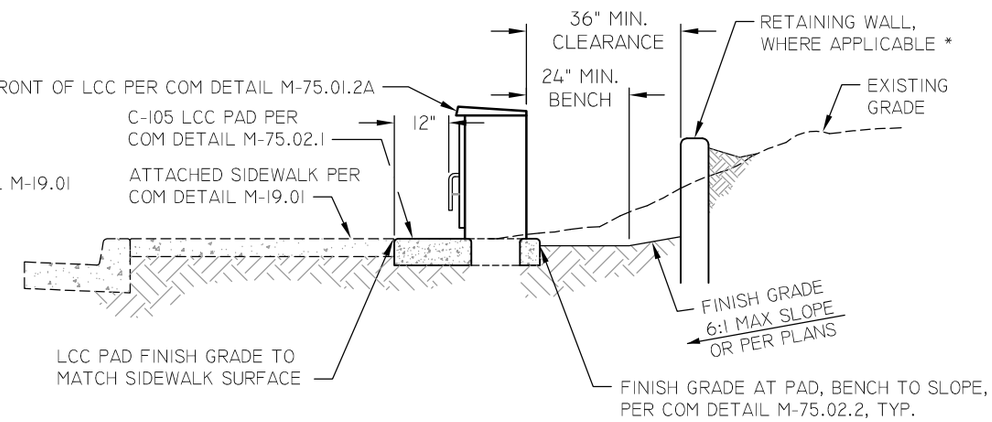

INSTALLATION AT SIDEWALK TO UPWARD SLOPE

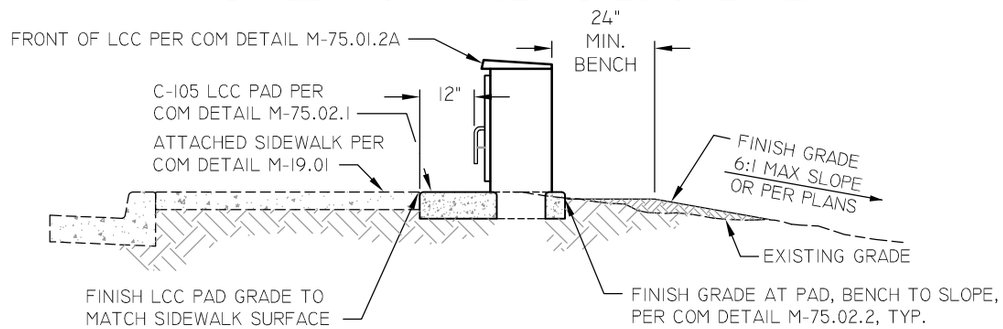

INSTALLATION AT SIDEWALK TO DOWNWARD SLOPE

* NOTE

A RETAINING WALL:

- IS REQUIRED IN AREAS OF FLOOD IRRIGATION
- IS REQUIRED WHERE A NEW 6:1 UPWARD SLOPE WILL NOT MEET THE EXISTING GRADE
- SHALL BE LOCATED FOR 36" MIN. CLEARANCE FROM LCC CABINET
- SHALL HAVE A DEPTH OF 10" MIN. BELOW SIDEWALK GRADE
- HAVE A SMOOTH TROWELED FINISH AND 1/2" RADIUS CHAMFERS ALONG TOP EDGES
- BE BACKFILLED WITH EXCAVATED MATERIALS AND COMPACTED PER MAG STANDARD SPECIFICATION 601.
- SHALL EXTEND A MINIMUM OF 6-FEET EITHER SIDE OF THE CABINET.

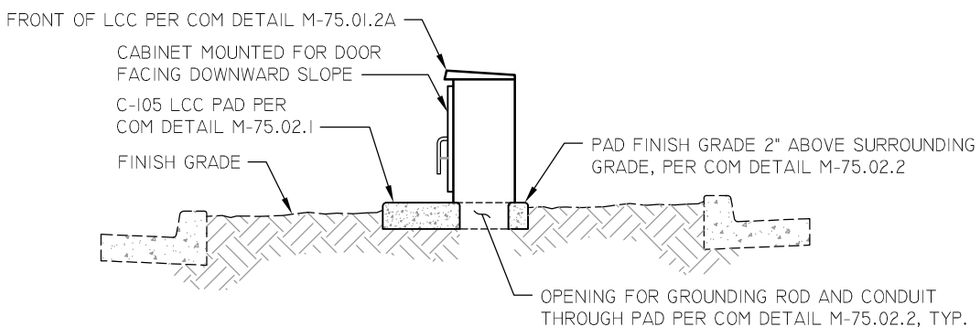

INSTALLATION IN UNPAVED MEDIAN

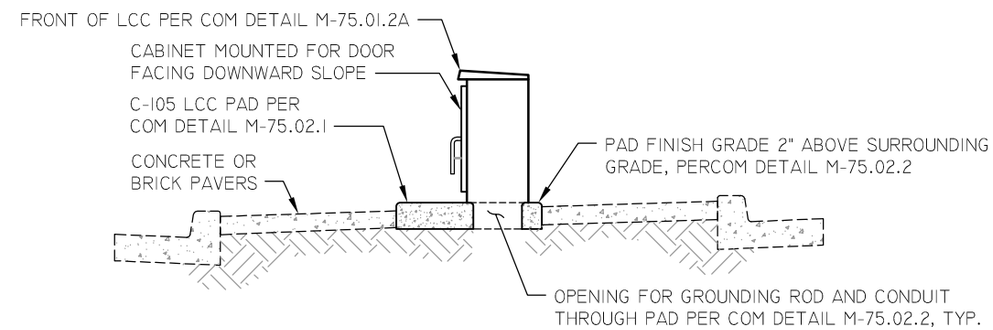

INSTALLATION IN PAVED MEDIAN

LIGHTING CONTROL PAD & CABINET INSTALLATION CONDITIONS

NOT TO SCALE

mesa·az

LIGHTING CONTROL CABINET PAD SPECIFICATION AND INSTALLATION

DETAIL NO. M-75.02.3

REV. 01/31/14

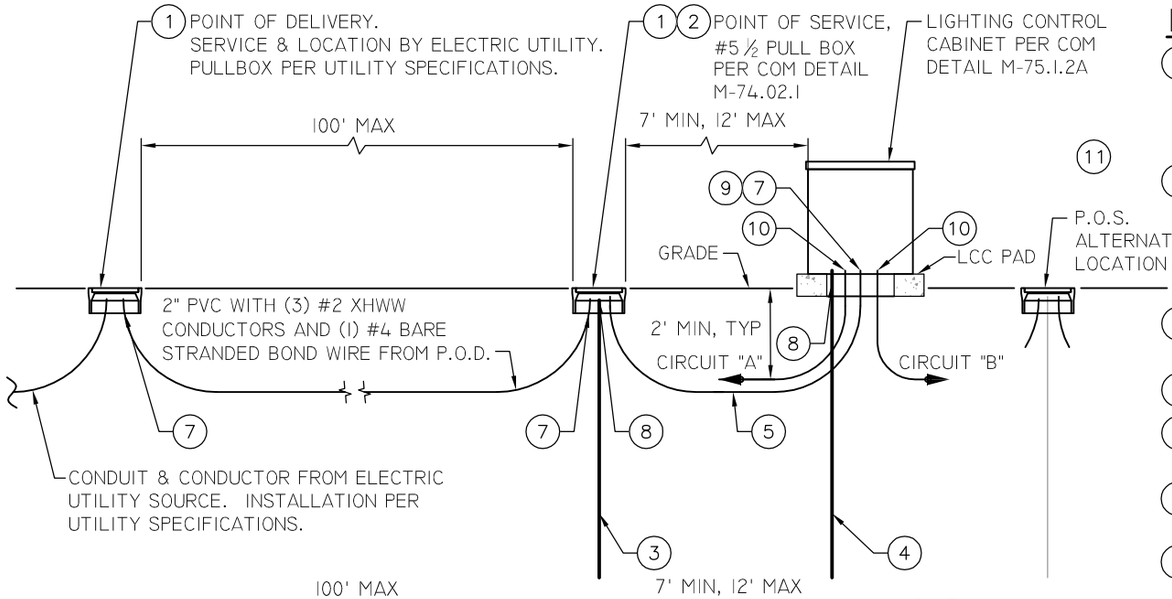

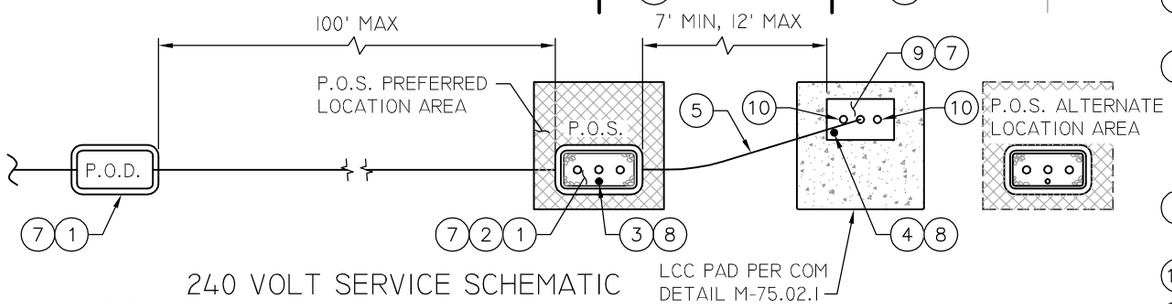

240 VOLT SERVICE SCHEMATIC

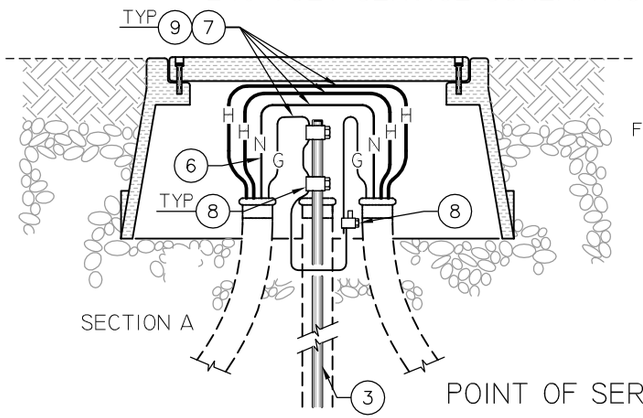

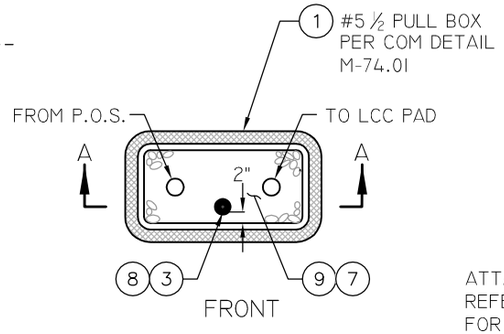

POINT OF SERVICE PULLBOX DETAIL

INSTALLATION NOTES

1. THE POINT OF DELIVERY (P.O.D.) PULL BOX, POINT OF SERVICE (P.O.S.) PULL BOX AND LIGHTING CONTROL CABINET (LCC) PAD SHALL BE INSTALLED AT THE SAME TIME AND LOCATED PER SCHEMATICS AND DETAILS SHOWN. THE P.O.S. SHALL BE CONFIGURED PER POINT OF SERVICE PULLBOX DETAIL SHOWN IN LOWER LEFT.
2. THE LCC PAD SHALL BE LOCATED BETWEEN 7' AND 12' FROM THE P.O.S. PULL BOX. WHEREVER POSSIBLE THE P.O.S. PULL BOX SHALL BE LOCATED IN AN AREA BETWEEN THE UTILITY'S P.O.D. PULL BOX AND THE LCC PAD. OTHERWISE THE P.O.S. PULL BOX MAY BE LOCATED WITHIN THE ALTERNATE AREA SHOWN. IN EITHER INSTANCE, THE P.O.S. PULL BOX SHALL BE LOCATED NO FURTHER THAN 100' FROM THE UTILITY'S P.O.D.
3. A 10' LONG, 5/8" COPPER CLAD GROUNDING ROD SHALL BE INSTALLED IN THE P.O.S. PULL BOX. THE GROUNDING ROD IN THE P.O.S. PULL BOX SHALL EXTEND 2" TO 4" ABOVE BASE OF PULL BOX.
4. SEE COM DETAIL M-75.02.2 FOR GROUNDING ROD AND EXTENSION THROUGH LCC PAD.
5. THE P.O.S. AND THE LCC PAD SHALL BE CONNECTED BY ONE (1) 2" PVC CONDUIT WITH THREE (3) #2 XHHW CONDUCTORS AND ONE (1) #4 AWG BARE STRANDED COPPER WIRE CONDUCTOR.
6. THE NEUTRAL CONDUCTOR (N) SHALL BE WHITE OR MARKED WITH WHITE TAPE FOR A MINIMUM OF 6" ALONG THE CONDUCTOR FROM POINT OF CONNECTION.
7. 2' TO 3'± ADDITIONAL FEET OF EACH CONDUCTOR SHALL BE LOOPED WITHIN P.O.D. & P.O.S. PULL BOXES AND THE LLC. LCC CIRCUITS SHALL BE TAGGED AND LABELED.
8. THE #4 AWG BARE STRANDED COPPER WIRE CONDUCTOR (N) IS USED TO INTERCONNECT THE P.O.S. AND LCC GROUNDING RODS AND SHALL BE INSTALLED WITHOUT SPLICES. 24-INCH LONG GROUND (G) TAILS SHALL BE PROVIDED AT THE P.O.S. AND LCC FOR INTERCONNECTING GROUNDS, NEUTRAL CONDUCTORS AND THE LCC PAD. APPROVED GROUNDING ROD CLAMPS SHALL BE DEDICATED AND ACCESSIBLE AT ALL P.O.S. AND LCC LOCATIONS.
9. ALL SPLICES FOR CONDUCTORS, GROUNDS AND BONDS SHALL BE DONE WITH A GEL CAP STUB SPLICE KIT #GELCAP SL-2/0-03 HOLE OR APPROVED EQUAL.
10. A MAXIMUM OF TWO STREETLIGHT CIRCUITS PER LCC IS ALLOWABLE.
11. WHENEVER A NEW LCC IS FED FROM THE P.O.S. OF AN EXISTING LCC A NEW P.O.S. PULLBOX SHALL ADDITIONALLY BE INSTALLED BETWEEN THE EXISTING AND NEW LCCS. (NOT SHOWN).

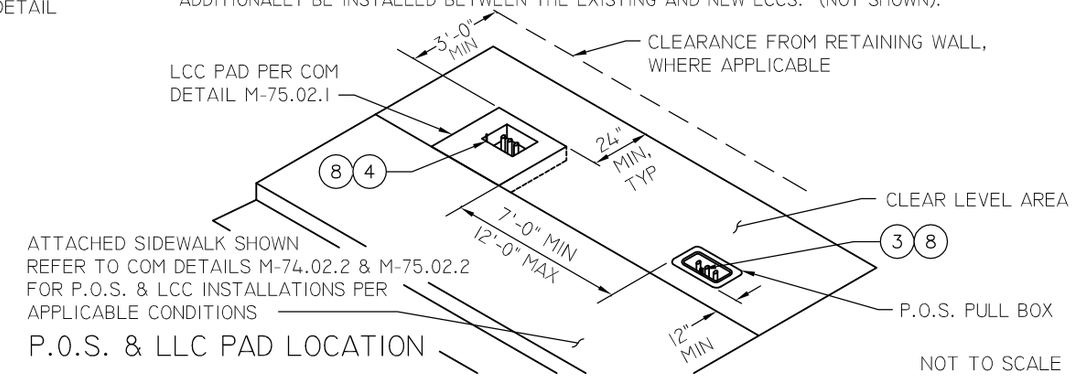

P.O.S. & LLC PAD LOCATION

NOT TO SCALE

mesa·az

240V SINGLE PHASE SERVICE POD / POS / LCC & GROUNDING

DETAIL NO.
M-75.03

REV. 12/01/2014

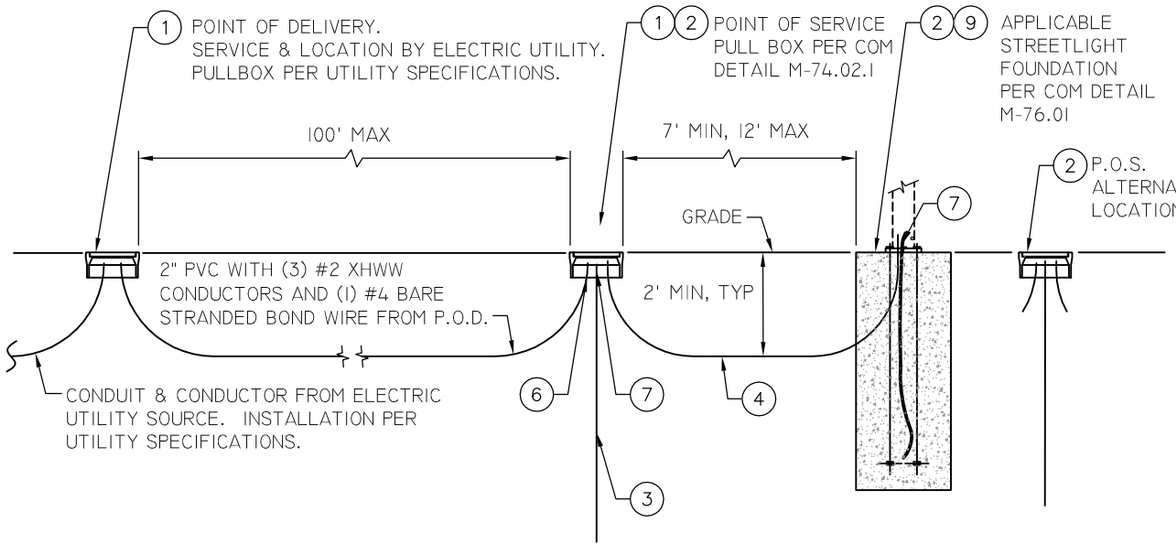

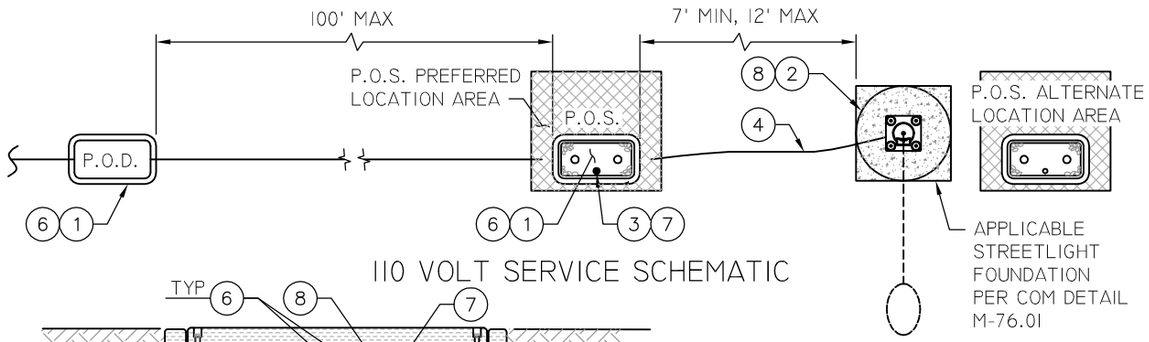

110 VOLT SERVICE SCHEMATIC

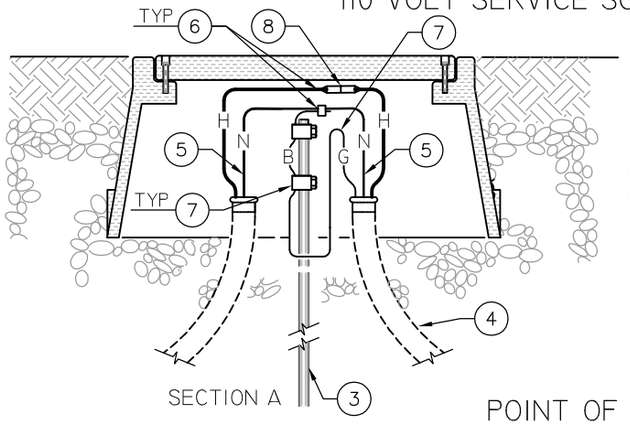

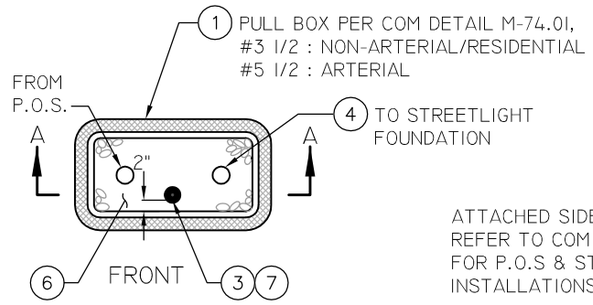

POINT OF SERVICE PULLBOX DETAIL

INSTALLATION NOTES

1. THE POINT OF DELIVERY (P.O.D.) AND POINT OF SERVICE (P.O.S.) PULL BOXES SHALL BE INSTALLED AT THE SAME TIME AND LOCATED PER SCHEMATICS AND DETAILS SHOWN. THE P.O.S. SHALL BE CONFIGURED PER POINT OF SERVICE PULLBOX DETAIL SHOWN IN LOWER LEFT.
2. THE STREETLIGHT POLE SHALL BE LOCATED BETWEEN 7' AND 12' FROM THE P.O.S. PULL BOX. WHEREVER POSSIBLE THE P.O.S. PULL BOX SHALL BE LOCATED IN AN AREA BETWEEN THE UTILITY'S P.O.D. PULL BOX AND THE STREETLIGHT. OTHERWISE THE P.O.S. PULL BOX MAY BE LOCATED WITHIN THE ALTERNATE AREA SHOWN. IN EITHER INSTANCE, THE P.O.S. PULL BOX SHALL BE LOCATED NO FURTHER THAN 100' FROM THE UTILITY'S P.O.D.
3. A 10' LONG, 5/8" COPPER CLAD GROUNDING ROD SHALL BE INSTALLED IN THE P.O.S. PULL BOX. THE GROUNDING ROD IN THE P.O.S. PULL BOX SHALL EXTEND 2" TO 4" ABOVE BASE OF PULL BOX.
4. THE P.O.S. AND THE STREETLIGHT FOUNDATION SHALL BE CONNECTED BY ONE (1) 1 1/2" PVC SCHEDULE 40 CONDUIT WITH TWO (2) #8 XHHW MINIMUM CONDUCTORS AND (1) #8 BARE STRANDED BOND (B) WIRE.
5. THE NEUTRAL CONDUCTOR (N) SHALL BE WHITE OR MARKED WITH WHITE TAPE FOR A MINIMUM OF 6" ALONG THE CONDUCTOR AND AWAY FROM A POINT OF CONNECTION.
6. 2' TO 3'± ADDITIONAL WIRE SHALL BE LOOPED WITHIN P.O.D. & P.O.S. PULL BOXES.
7. 24-INCH LONG GROUND (G) AND BOND (B) TAILS SHALL BE PROVIDED AT THE P.O.S. AND EACH STREETLIGHT FOR CONNECTIONS TO THE NEUTRAL CONDUCTORS AND GROUNDING, AS REQUIRED PER COM DETAILS M-73.06.1, M-73.06.2 & M-73.07. ALL SPLICES, GROUNDS AND BONDS SHALL BE DONE WITH A GEL CAP STUB SPLICE KIT #GELCAP SL-2/0-03 HOLE OR APPROVED EQUAL. APPROVED GROUNDING ROD CLAMPS SHALL BE DEDICATED AND ACCESSIBLE AT THE P.O.S.
8. A WATER PROOF FUSE HOLDER WITH A 30 AMP FUSE SHALL BE INSTALLED ON THE HOT CONDUCTOR (H) FROM THE UTILITY SERVICE.
9. A MAXIMUM OF THREE STREETLIGHTS CONNECTED FROM THE P.O.S. ARE ALLOWABLE.

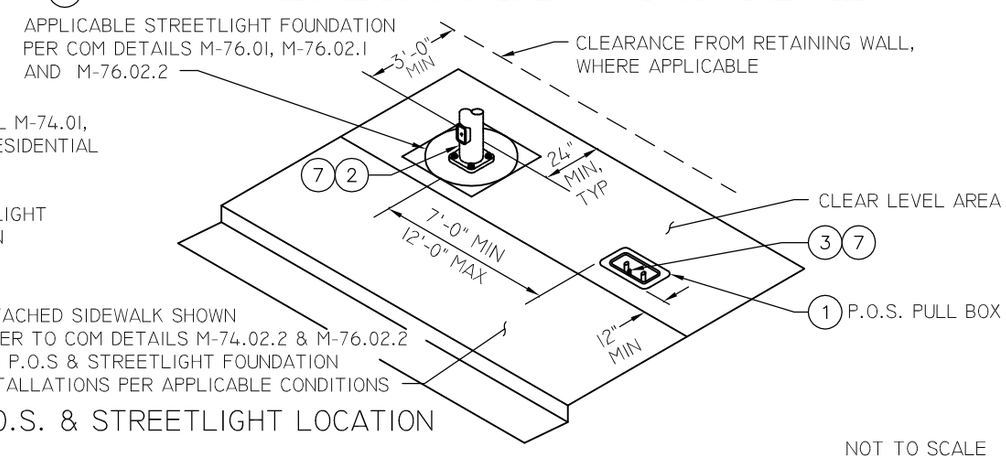

P.O.S. & STREETLIGHT LOCATION

NOT TO SCALE

mesa·az

120V SINGLE PHASE SERVICE POD / POS & GROUNDING

DETAIL NO.
M-75.04

REV. 03/04/2015

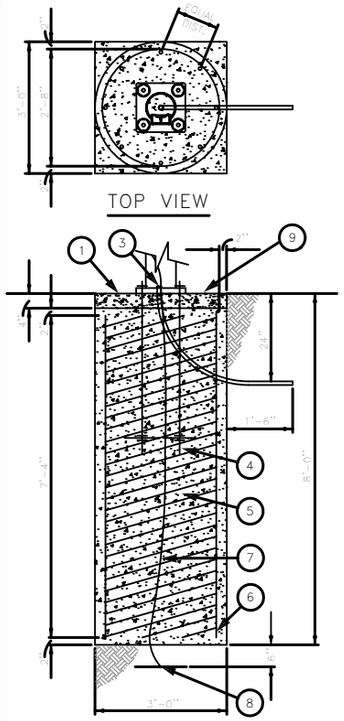

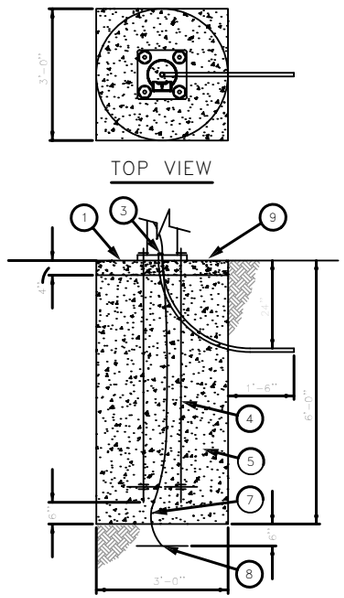

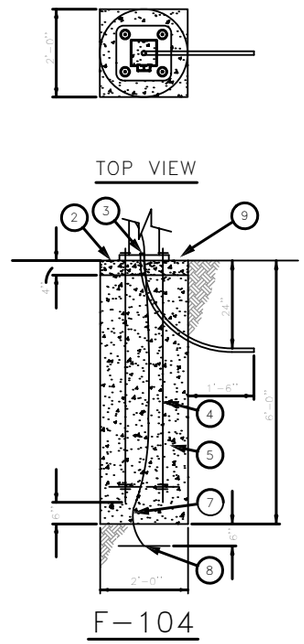

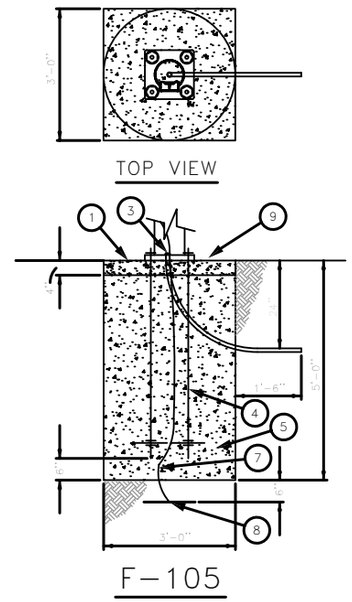

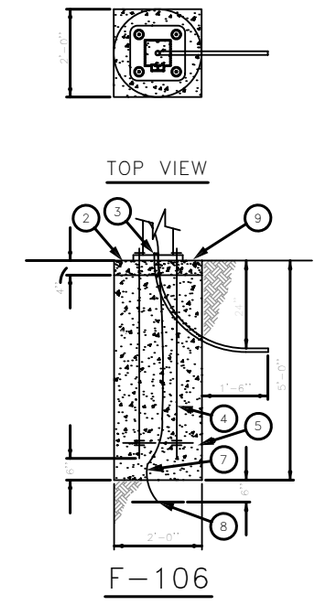

NOTES:

1. ALL POLE FOUNDATIONS SHALL HAVE A 14" COPPER GROUNDING PLATE (M-73.6) 6" BELOW BOTTOM OF POLE FOUNDATION.
2. ALL FINISHED POLE FOUNDATIONS SHALL BE AT SIDEWALK GRADE, UNLESS OTHERWISE NOTED.
3. ALL 45 DEGREE AND 90 DEGREE BENDS FOR CONDUIT SHALL HAVE A RADIUS OF NOT LESS THAN 18" (FACTORY BENDS ONLY SHALL BE USED).
4. UNDERGROUND WIRING CIRCUITS SHALL BE INSTALLED IN SCHEDULE 40 RIGID P.V.C. CONDUIT. IT SHALL BE U.L. APPROVED FOR ABOVE GROUND AND UNDERGROUND USE WITH 90 DEGREE C WIRE. MINIMUM DEPTH FROM TOP OF CURB TO TOP OF CONDUIT SHALL NOT BE LESS THAN 24" UNLESS OTHERWISE SPECIFIED.
5. INSPECTION BY ENGINEERING INSPECTOR SHALL BE REQUESTED BY THE ELECTRICAL CONTRACTOR WHEN THE POLE FOUNDATIONS ARE DUG, ANCHOR BOLTS, GROUND WIRE, AND GROUNDING PLATE ARE READY AND IN PLACE, PRIOR TO POURING CONCRETE.
6. WHILE CONCRETE FOUNDATIONS ARE POURED THEY SHALL BE VIBRATED WITH A MECHANICAL VIBRATOR.
7. POLE FOUNDATIONS SHALL CURE FOR 72-HOURS BEFORE INSTALLING LIGHT POLES.
8. IN IRRIGATED AREAS, POLES AND PULL BOXES SHALL BE INSTALLED IN SUCH A MANNER THAT THEY ARE KEPT OUT OF DIRECT CONTACT WITH IRRIGATION WATER.
9. IN AREAS THAT SLOPE AWAY FROM THE SIDEWALK, CURB, OR ROADWAY, THE GRADE AROUND THE POLES SHALL BE SUCH THAT SIDEWALK, CURB, OR ROADWAY CAN BE USED AS THE GRADE CONTROL POINT FOR THE POLE FOUNDATION ELEVATION.
10. UNSTABLE SOIL MAY REQUIRE DEEPER FOUNDATIONS AS DETERMINED BY THE ENGINEER.

FOUNDATION NOTES

1. 3'-0" SQUARE, 4" THICK TROWELED FINISH SMOOTH CONCRETE CAP WITH 1/2" ROUND EDGE.
2. 2'-0" SQUARE, 4" THICK TROWELED FINISH SMOOTH CONCRETE CAP WITH 1/2" ROUND EDGE.
3. 1-1/2" SCHEDULE 40 P.V.C. 90 DEGREE BEND CONDUIT WITH A RADIUS OF NOT LESS THAN 18" (FACTORY BENDS ONLY SHALL BE USED). CONDUIT SHALL PROJECT A MINIMUM OF 2" ABOVE THE FOUNDATION. MAXIMUM PROJECTION SHALL BE 4". (FOR PC POLE SEE NOTE 10)
4. ANCHOR BOLTS WITH 4 HEX NUTS, AND 2 FLAT WASHERS AND 1 ANCHOR PLATE BOLT SHALL BE HOT DIPPED GALVANIZED PER M.A.G. STANDARD 771. SEE DATA TABLE ON POLE SPECIFICATION FOR SIZE, PROJECTION ABOVE FOUNDATION, AND BOLT CIRCLE.
5. CLASS A CONCRETE PER M.A.G. STANDARD 725.
6. FOUNDATION SHALL REQUIRE 8 EA. (#7 x 7'-4") VERTICAL BARS, WITH 3/8" ROUND COLD DRAWN STEEL WIRE SPIRAL CAGE WITH A 3" PER FOOT PITCH.
7. THE BOND WIRE IN THE CONCRETE FOUNDATION, SHALL BE A #6 STRANDED AND GREEN INSULATED WITH XHHW INSULATION.
8. 14'' COPPER GROUNDING PLATE (M-73.06).
9. 4" CAP TO BE MINIMUM CLASS B CONCRETE PER M.A.G. STANDARD 725.
10. 1-1/2" CONDUIT MIN. SHALL BE USED FOR PC CIRCUIT.

NOT TO SCALE

mesa·az

STREETLIGHT FOUNDATION SPECIFICATION

DETAIL NO.
M-76.01

REV. 12/01/2014

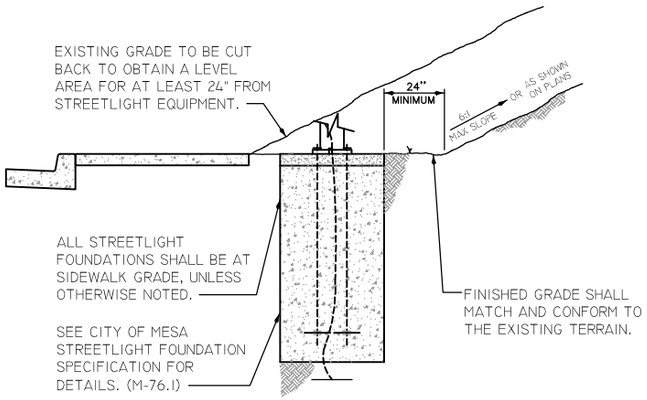

UPWARD SLOPE DETAIL

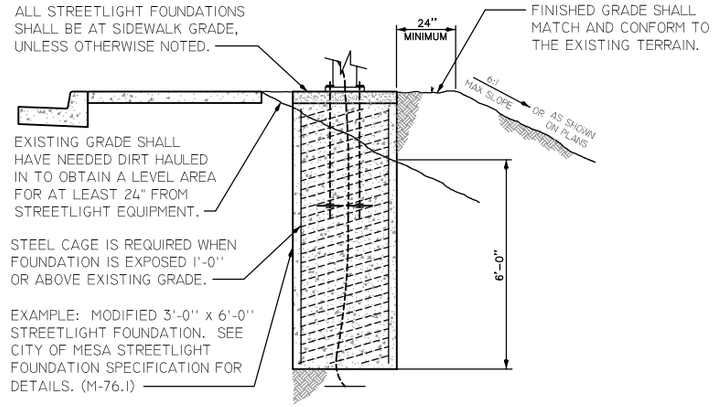

DOWNWARD SLOPE WITH FILL DETAIL

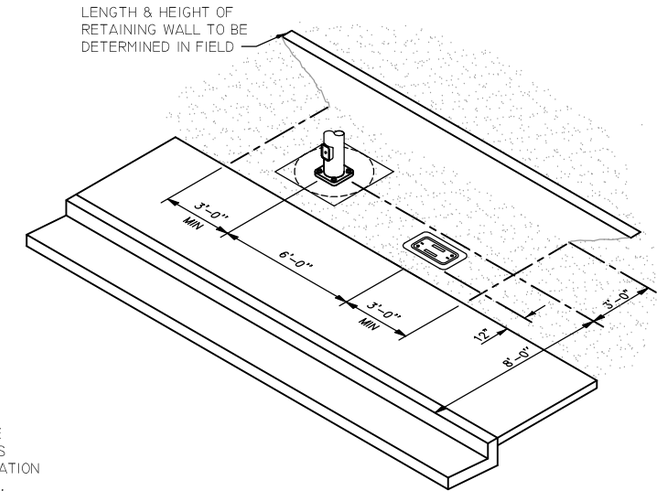

RETAINING WALL DETAIL

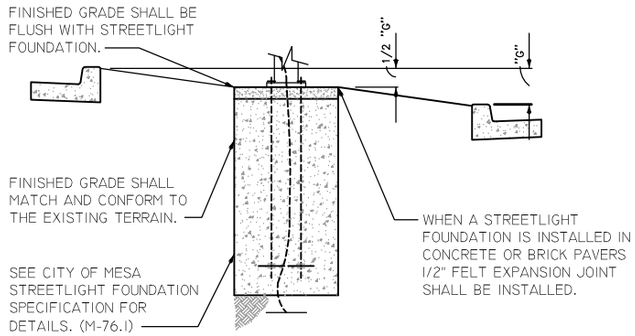

MEDIAN DETAIL

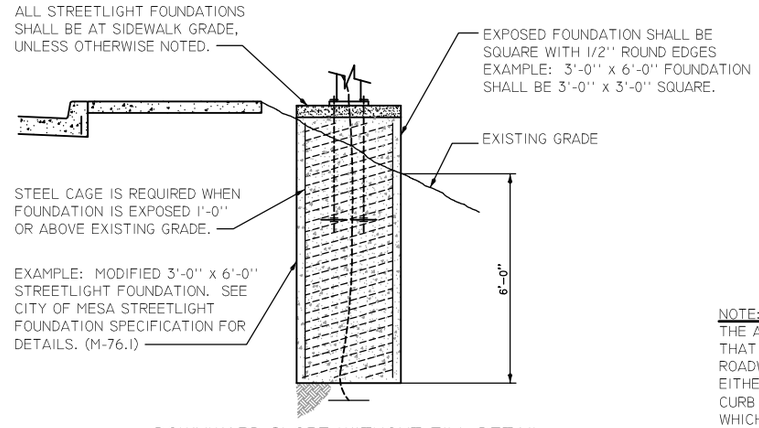

DOWNWARD SLOPE WITHOUT FILL DETAIL

NOTE:
THE ANCHOR BOLTS, POLE BASE PLATE AND THE POLE ITSELF SHALL BE INSTALLED SUCH THAT THE CENTERLINE OF THE STREETLIGHT ARM IS PERPENDICULAR TO THE ADJACENT ROADWAY BACK OF CURB LINE AT THE POLE LOCATION WITH A TOLERANCE OF 1.0-DEGREE IN EITHER DIRECTION OF STRICTLY PERPENDICULAR. AN EXCEPTION WILL OCCUR WHERE THE CURB LINE IS CONSTRUCTED ON A TAPER (SUCH AS AT A CHANGE IN ROADWAY WIDTH), IN WHICH CASE, THE ARM SHALL BE INSTALLED PERPENDICULAR TO ROADWAY CENTERLINE.

INSTALLATION NOTES:

1. SPECIAL FOUNDATION INSTALLATIONS SHALL BE CONSTRUCTED FOLLOWING THE CITY OF MESA STREETLIGHT FOUNDATION SPECIFICATION UNLESS NOTED OTHERWISE.
2. THE DEPTH OF FOUNDATION SHALL BE MEASURED FROM THE LOWEST PART OF THE EXISTING GRADE.
3. EXPOSED FOUNDATION SHALL BE SQUARE WITH 1/2'' ROUND EDGES.
4. STEEL CAGE IS REQUIRED WHEN FOUNDATION IS EXPOSED 1'-0'' OR ABOVE EXISTING GRADE.
5. ALL FINISHED STREETLIGHT POLE FOUNDATIONS & CONTROLLER PADS SHALL BE AT SIDEWALK GRADE AND ADJACENT TO SIDEWALK UNLESS NOTED. STREETLIGHT PULL BOXES SHALL BE AT SIDEWALK GRADE AND 12" FROM SIDEWALK UNLESS OTHERWISE NOTED. INSTALL #20LB FELT BETWEEN BACK OF SIDEWALK AND FOUNDATION.
6. WHEN STREETLIGHT EQUIPMENT (POLES, FOUNDATIONS, PULL BOXES, AND CONTROLLER CABINETS) IS INSTALLED IN AN UPWARD SLOPE SECTION A RETAINING WALL SHALL BE INSTALLED OR THE GRADE SHALL BE CUT BACK TO OBTAIN A LEVEL AREA FOR AT LEAST 24'' FROM STREETLIGHT EQUIPMENT. THE SLOPE OF THE FINISHED GRADE SHALL NOT EXCEED A 6:1 SLOPE AND SHALL MATCH AND CONFORM TO THE EXISTING TERRAIN.
7. WHEN STREETLIGHT EQUIPMENT (POLES, FOUNDATIONS, PULL BOXES, AND CONTROLLER CABINETS) IS INSTALLED IN A DOWNWARD SLOPE SECTION, NEEDED DIRT SHALL BE HAULED IN TO OBTAIN A LEVEL AREA FOR AT LEAST 24'' FROM THE STREETLIGHT EQUIPMENT. THE SLOPE OF THE FINISHED GRADE SHALL NOT EXCEED A 6:1 SLOPE AND SHALL MATCH AND CONFORM TO THE EXISTING TERRAIN.
8. RETAINING WALL SHALL BE INSTALLED IN ALL AREAS THAT CANNOT BE CUT BACK TO OBTAIN A LEVEL AREA FOR AT LEAST 24'' FROM STREETLIGHT EQUIPMENT, IN AREAS THAT THE FINISHED GRADE WILL EXCEED A 1:6 SLOPE, AND IN AREAS THAT USE FLOOD IRRIGATION.
9. RETAINING WALL SHALL HAVE A FOUNDATION 10'' BELOW SIDEWALK GRADE.
10. RETAINING WALL SHALL HAVE A TROWELED SMOOTH FINISH WITH 1/2" ROUND EDGES.
11. BACKFILL WITH EXCAVATED MATERIALS AND THOROUGHLY TAMP PER MARICOPA ASSOCIATION OF GOVERNMENTS STANDARD 601.

NOT TO SCALE

mesa·az

STREETLIGHT FOUNDATION INSTALLATION SPECIFICATION

DETAIL NO.
M-76.02

REV. 03/26/2015

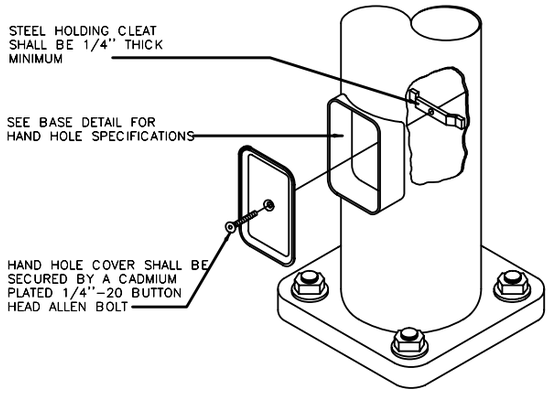

STANDARD HAND HOLE ASSEMBLY

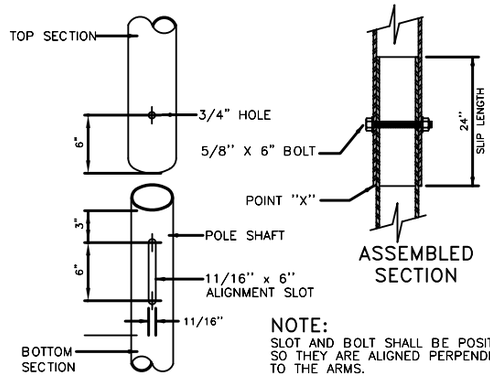

NOTE:
SLOT AND BOLT SHALL BE POSITIONED SO THEY ARE ALIGNED PERPENDICULAR TO THE ARMS.

SLIP JOINT AND TOP SECTION ATTACHMENT

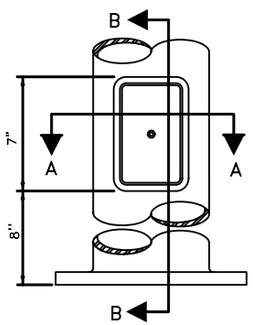

HAND HOLE DETAIL

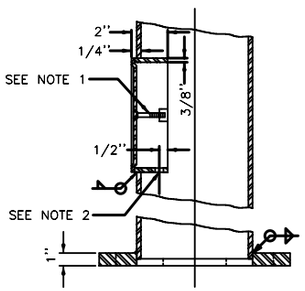

SECTION B–B

DATA TABLE	
POLE #	DESCRIPTION
P-501	TOP SECTION WITH BRACKET
P-502	BOTTOM SECTION

NOTE:
TWIN DAVIT STREETLIGHT POLES SHALL BE USED ONLY FOR REPLACEMENT AND ONLY TO MATCH EXISTING STREETLIGHT POLES.

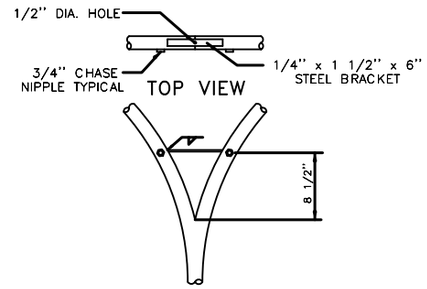

BRACKET DETAIL

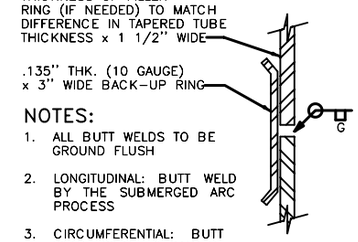

NOTES:
1. ALL BUTT WELDS TO BE GROUND FLUSH
2. LONGITUDINAL: BUTT WELD BY THE SUBMERGED ARC PROCESS
3. CIRCUMFERENTIAL: BUTT WELD WITH PERMANENT BACK-UP RING

SPLICE DETAIL

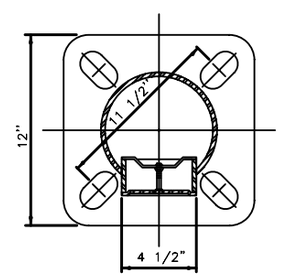

SECTION A–A

NOTES:
1. HAND HOLE COVER SHALL BE SECURED BY A CADMIUM PLATED 1/4"-20 BUTTON HEAD ALLEN BOLT AND HOLDING CLEAT.
2. POLE GROUND SHALL BE 1/2" DIA. N.C. TAPPED HOLE LOCATED AS SHOWN.
3. HAND HOLE SHALL BE ORIENTED SO THAT IT IS ALIGNED WITH THE MAST ARM.
4. HAND HOLE DIMENSIONS SHALL BE 4" BY 6 1/2".
5. HAND HOLE COVER DIMENSIONS SHALL BE 4 1/2" BY 7".
6. SLOT LENGTH OF BASE PLATE EQUALS ANCHOR BOLT DIA. PLUS 1/2" ON BOTH SIDES OF ANCHOR BOLT.

BASE DETAIL

NOTES

1. THE POLE DESIGN, MATERIALS, AND CONSTRUCTION SHALL CONFORM TO AASHTO STANDARD SPECIFICATIONS FOR STRUCTURAL SUPPORTS FOR HIGHWAY SIGNS, LUMINAIRES AND TRAFFIC SIGNALS, BASED ON A WIND SPEED OF 80 MILES PER HOUR.
2. THE POLE AND ALL PARTS SHALL BE STEEL.
3. THE POLE AND ALL POLE PARTS SHALL BE SAND BLASTED TO SSPC SPECIFICATIONS SP-6-63. A PRIMER COAT OF TNEMEC SERIES 66 HI BUILD EPOXOLINE OR APPROVED EQUAL SHALL BE APPLIED TO A THICKNESS OF 3 DRY MILS. THE COLOR COATING SHALL BE TNEMEC SERIES 73 ENDURA SHIELD III OR APPROVED EQUAL, APPLIED TO A MINIMUM THICKNESS OF 3 DRY MILS. THE FINAL COATING SHALL BE TNEMEC SERIES 76 ENDURA CLEAR OR APPROVED EQUAL, APPLIED TO A MINIMUM THICKNESS OF 1.5 MILLS. THE FINISH COLOR SHALL BE ECHO GREEN, TNEMEC COLOR NUMBER G1280.
4. UNSTABLE SOIL MAY REQUIRE DEEPER FOUNDATION, AS DETERMINED BY THE ENGINEER.
5. THE 1-1/4" ANCHOR BOLT SHALL HAVE A LENGTH DETERMINED BY THE DEPTH OF THE FOUNDATION, AND SHALL EXTEND TO 6" +OR- 1" ABOVE THE BOTTOM OF THE FOUNDATION. (M-73.06)
6. ANCHOR BOLTS WITH (4) HEX NUTS, (2) FLAT WASHERS, AND (1) ANCHOR PLATE PER BOLT SHALL BE HOT DIPPED GALVANIZED PER M.A.G. STANDARD 771. (M-73.06)
7. ANCHOR BOLTS SHALL HAVE 1/4" TO 3/4" FULL THREAD ABOVE NUT. (M-73.06)
8. CONDUIT SHALL PROJECT A MINIMUM OF 2" ABOVE THE FOUNDATION. MAXIMUM PROJECTION SHALL BE 4".
9. 2'-0" SQUARE, 4" THICK TROWELED FINISH SMOOTH CONCRETE CAP WITH 1/2" ROUND EDGE.
10. CLASS A CONCRETE PER M.A.G. STANDARD 725.
11. #6 XHHW GREEN INSULATED COPPER STRANDED GROUNDING WIRE.
12. 14" COPPER GROUNDING PLATE. (M-73.06)
13. THE PIPE ON EACH SIDE OF A CIRCUMFERENTIAL WELD SHALL HAVE THE SAME OUTSIDE DIAMETER AT THE WELD.
14. A METAL TAG SHALL BE PERMANENTLY ATTACHED TO THE POLE ABOVE THE HAND HOLE STATING THE MANUFACTUER'S NAME, C.O.M. POLE #, AND DATE MANUFACTURED.
15. A METAL TAG SHALL BE PERMANENTLY ATTACHED ON THE SIDE OF THE MAST ARM NEAR THE BASE STATING THE MANUFACTURER'S NAME, C.O.M. POLE #, AND DATE MANUFACTURED.

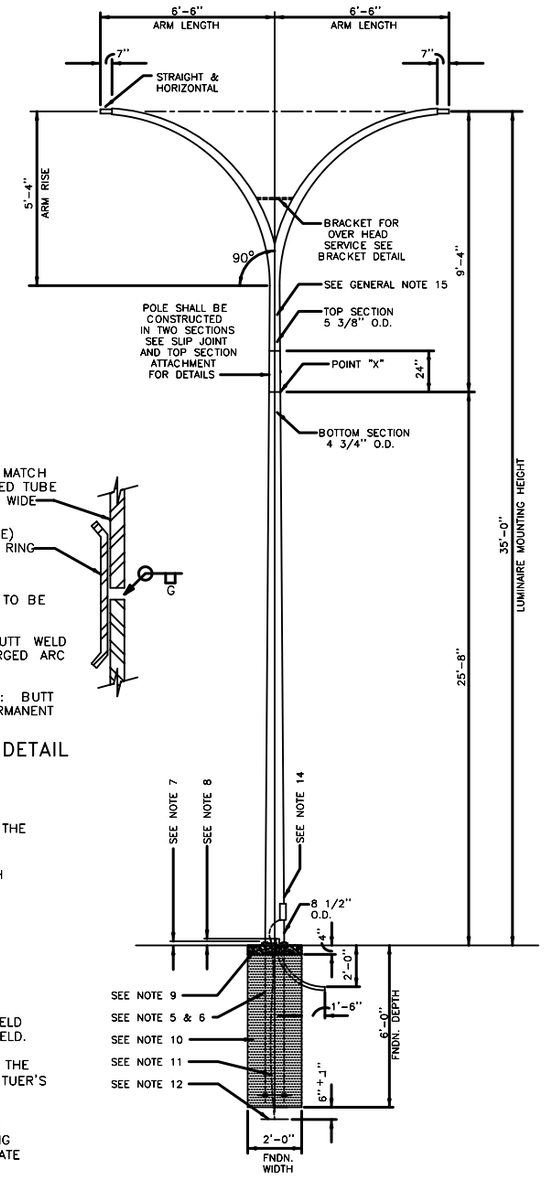

NOT TO SCALE

mesa·az

TWIN DAVIT STREETLIGHT POLE SPECIFICATION

DETAIL NO. M-78.01

REV. 02/04/13

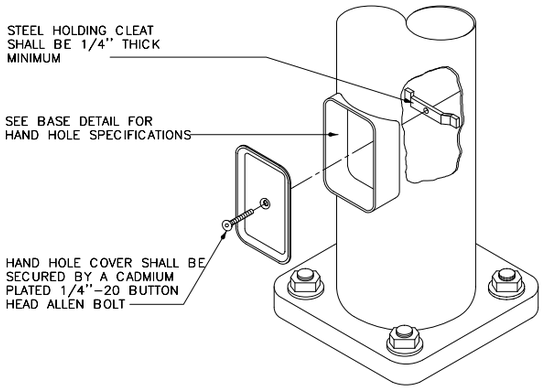

STANDARD HAND HOLE ASSEMBLY

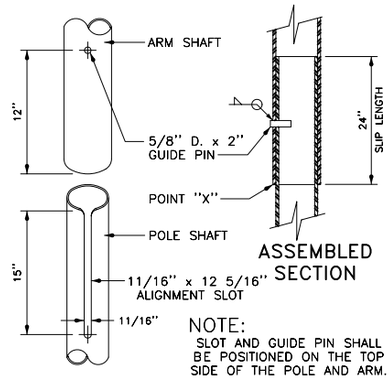

SLIP JOINT MAST ARM ATTACHMENT

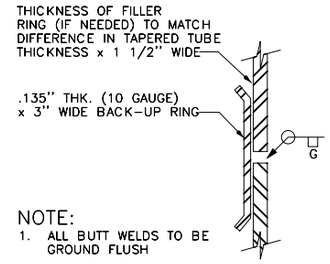

NOTE:
1. ALL BUTT WELDS TO BE GROUND FLUSH
2. LONGITUDINAL: BUTT WELD BY THE SUBMERGED ARC PROCESS
3. CIRCUMFERENTIAL: BUTT WELD WITH PERMANENT BACK-UP RING

SPLICE DETAIL

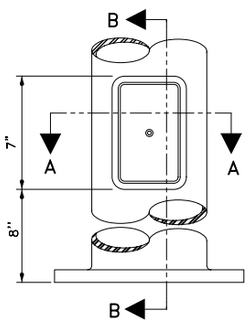

HAND HOLE DETAIL

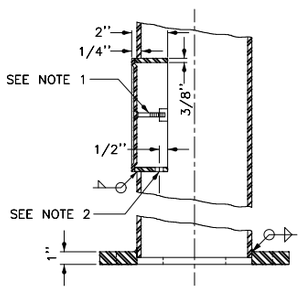

SECTION B-B

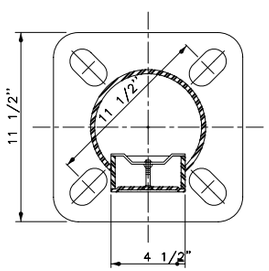

SECTION A-A

NOTES:
1. HAND HOLE COVER SHALL BE SECURED BY A CADMIUM PLATED 1/4"-20 BUTTON HEAD ALLEN BOLT AND HOLDING CLEAT.
2. POLE GROUND SHALL BE 1/2" DIA. N.C. TAPPED HOLE LOCATED AS SHOWN.
3. HAND HOLE SHALL BE ORIENTED SO THAT IT IS ALIGNED WITH THE MAST ARM.
4. HAND HOLE DIMENSIONS SHALL BE 4" BY 6 1/2".
5. HAND HOLE COVER DIMENSIONS SHALL BE 4 1/2" BY 7".
6. SLOT LENGTH OF BASE PLATE EQUALS ANCHOR BOLT DIA. PLUS 1/2" ON BOTH SIDES OF ANCHOR BOLT.

BASE DETAIL

NOTES:

1. THE POLE DESIGN, MATERIALS, AND CONSTRUCTION SHALL CONFORM TO AASHTO STANDARD SPECIFICATIONS FOR STRUCTURAL SUPPORTS FOR HIGHWAY SIGNS, LUMINAIRES, AND TRAFFIC SIGNALS, BASED ON A WIND SPEED OF 80 MILES PER HOUR.
2. THE POLE AND ALL PARTS SHALL BE STEEL.
3. THE POLE AND ALL POLE PARTS SHALL BE HOT DIPPED GALVANIZED PER M.A.G. STANDARD 771.
4. UNSTABLE SOIL MAY REQUIRE DEEPER FOUNDATION, AS DETERMINED BY THE ENGINEER.
5. THE 1 1/4" ANCHOR BOLT SHALL HAVE A LENGTH DETERMINED BY THE DEPTH OF THE FOUNDATION, AND SHALL EXTEND TO 6" +OR- 1" FROM THE BOTTOM OF THE FOUNDATION. (M-73.06)
6. ANCHOR BOLTS WITH (4) HEX NUTS, (2) FLAT WASHERS, AND (1) ANCHOR PLATE PER BOLT SHALL BE HOT DIPPED GALVANIZED PER M.A.G. STANDARD 771. (M-73.06)
7. ANCHOR BOLTS SHALL HAVE 1/4" TO 3/4" FULL THREAD ABOVE NUT. (M-73.06)
8. CONDUIT SHALL PROJECT A MINIMUM OF 2" ABOVE THE FOUNDATION. MAXIMUM PROJECTION SHALL BE 4".
9. 3'-0" SQUARE, 4" THICK TROWELED FINISH SMOOTH CONCRETE CAP WITH 1/2" ROUND EDGE.
10. CLASS A CONCRETE PER M.A.G. STANDARD 725.
11. #6 XHHW GREEN INSULATED COPPER STRANDED GROUNDING WIRE.
12. 14" COPPER GROUNDING PLATE. (M-73.06)
13. THE PIPE ON EACH SIDE OF A CIRCUMFERENTIAL WELD SHALL HAVE THE SAME OUTSIDE DIAMETER AT THE WELD.

NOTE:
T SERIES STREETLIGHT POLE SHALL BE USED ONLY FOR REPLACEMENT AND ONLY TO MATCH EXISTING STREETLIGHT POLES.

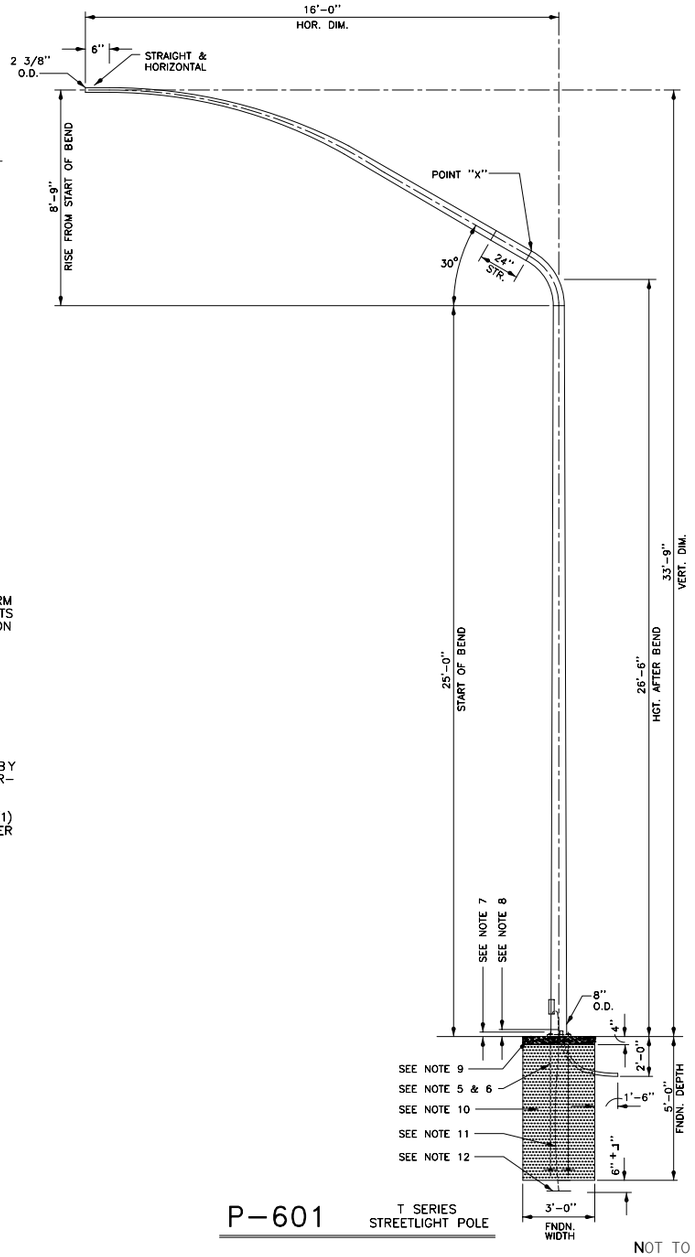

P-601 T SERIES STREETLIGHT POLE

NOT TO SCALE

mesa·az

T SERIES STREETLIGHT POLE SPECIFICATION

DETAIL NO. M-78.02

REV. 02/04/13

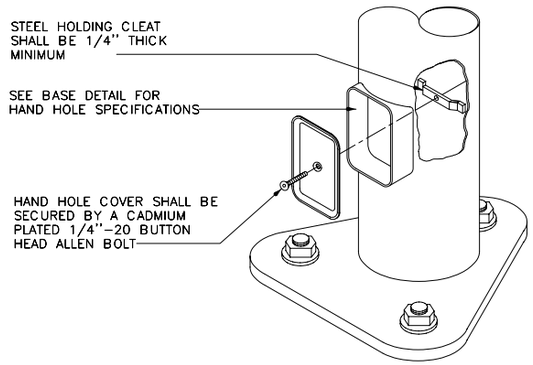

STANDARD HAND HOLE ASSEMBLY

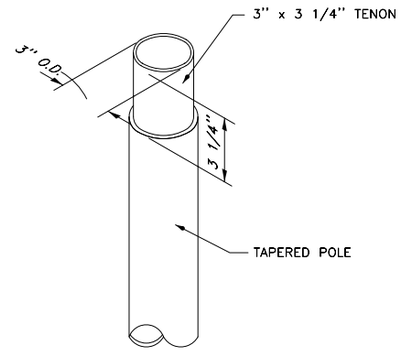

TENON DETAIL

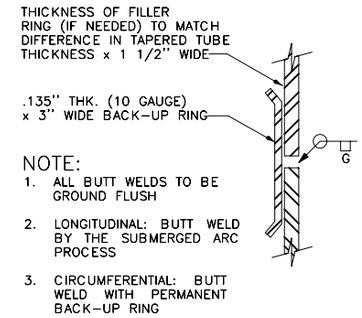

NOTE:
1. ALL BUTT WELDS TO BE GROUND FLUSH
2. LONGITUDINAL: BUTT WELD BY THE SUBMERGED ARC PROCESS
3. CIRCUMFERENTIAL: BUTT WELD WITH PERMANENT BACK-UP RING

SPLICE DETAIL

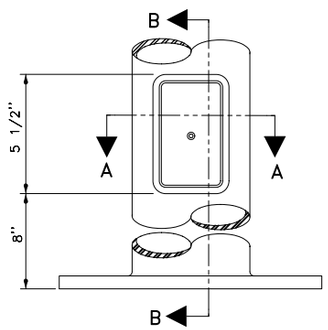

HAND HOLE DETAIL

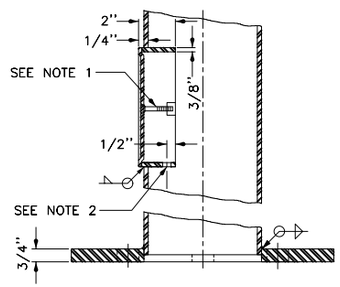

SECTION B-B

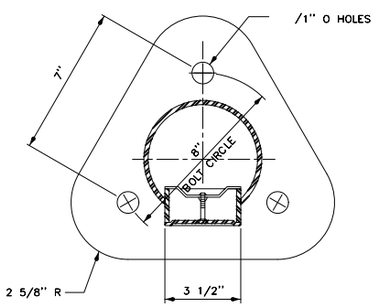

SECTION A-A

NOTES:
1. HAND HOLE COVER SHALL BE SECURED BY A CADMIUM PLATED 1/4"-20 BUTTON HEAD ALLEN BOLT AND HOLDING CLEAT.
2. POLE GROUND SHALL BE 1/2" DIA. N.C. TAPPED HOLE LOCATED AS SHOWN.
3. HAND HOLE SHALL BE ORIENTED SO THAT IT FACES THE STREET.
4. HAND HOLE DIMENSIONS SHALL BE 3 1/2" BY 5 1/2".

BASE DETAIL

NOTES:
1. THE POLE DESIGN, MATERIALS, AND CONSTRUCTION SHALL CONFORM TO AASHTO STANDARD SPECIFICATIONS FOR STRUCTURAL SUPPORTS FOR HIGHWAY SIGNS, LUMINAIRES, AND TRAFFIC SIGNALS, BASED ON A WIND SPEED OF 80 MILES PER HOUR.
2. THE POLE AND ALL PARTS SHALL BE STEEL.
3. THE POLE AND ALL POLE PARTS SHALL BE HOT DIPPED GALVANIZED PER M.A.G. STANDARD 771.
4. UNSTABLE SOIL MAY REQUIRE DEEPER FOUNDATION, AS DETERMINED BY THE ENGINEER.
5. THE 3/4" ANCHOR BOLT SHALL HAVE A LENGTH DETERMINED BY THE DEPTH OF THE FOUNDATION, AND SHALL EXTEND TO 6" +OR- 1" FROM THE BOTTOM OF THE FOUNDATION. (M-73.6) (SEE DETAIL M-76.1, FOUNDATION DETAIL F-106, SEE BASE DETAIL ON THIS SHEET FOR ANCHOR BOLT PATTERN).
6. ANCHOR BOLTS WITH (4) HEX NUTS, (2) FLAT WASHERS, AND (1) ANCHOR PLATE PER BOLT SHALL BE HOT DIPPED GALVANIZED PER M.A.G. STANDARD 771. (M-73.06)
7. ANCHOR BOLTS SHALL HAVE 1/4" TO 3/4" FULL THREAD ABOVE NUT. (M-73.06)
8. CONDUIT SHALL PROJECT A MINIMUM OF 2" ABOVE THE FOUNDATION. MAXIMUM PROJECTION SHALL BE 4".
9. 2'-0" SQUARE, 4" THICK TROWELED FINISH SMOOTH CONCRETE CAP WITH 1/2" ROUND EDGE.
10. CLASS A CONCRETE PER M.A.G. STANDARD 725.
11. #6 XHHW GREEN INSULATED COPPER STRANDED GROUNDING WIRE.
12. 14" COPPER GROUNDING PLATE. (M-73.06)
13. THE PIPE ON EACH SIDE OF A CIRCUMFERENTIAL WELD SHALL HAVE THE SAME OUTSIDE DIAMETER AT THE WELD.
14. A STAINLESS STEEL TAG SHALL BE PERMANENTLY ATTACHED TO THE POLE ABOVE THE HAND HOLE STATING THE MANUFACTURER'S NAME, C.O.M. POLE #, AND DATE MANUFACTURED.

NOTE:
SMALL TAPERED STREETLIGHT POLE SHALL BE USED ONLY FOR REPLACEMENT AND ONLY TO MATCH EXISTING STREETLIGHT POLES.

DATA TABLE

POLE #	POLE HGT.
	"A"
P-701	9'-0"
P-702	10'-0"
P-703	11'-0"
P-704	12'-0"
P-705	13'-0"
P-706	14'-0"
P-707	15'-0"
P-708	16'-0"
P-709	18'-0"
P-710	20'-0"
P-711	22'-0"

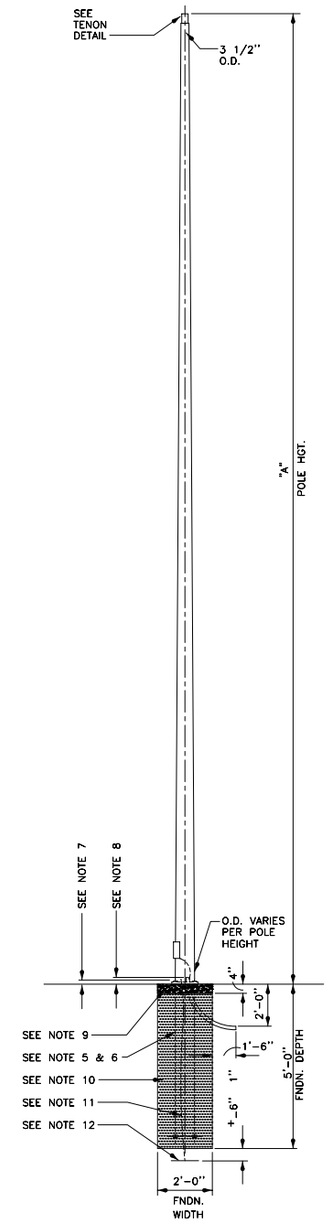

NELACS OT TO

mesa az

SMALL TAPERED STREETLIGHT POLE SPECIFICATION

DETAIL NO. M-78.03

REV. 02/04/13

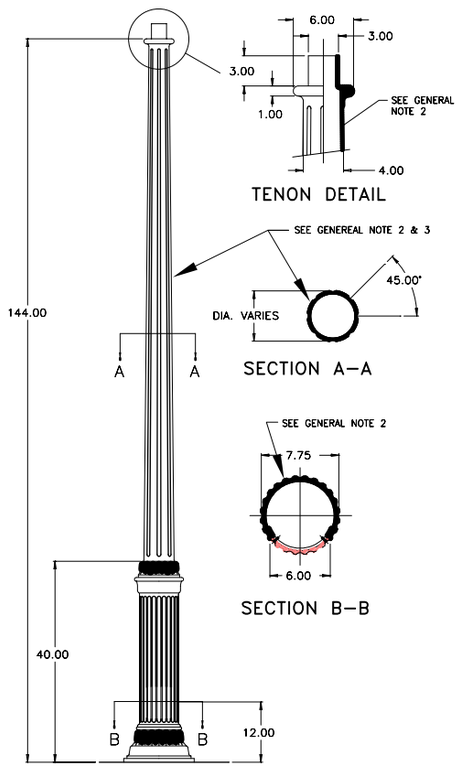

POLE ELEVATION

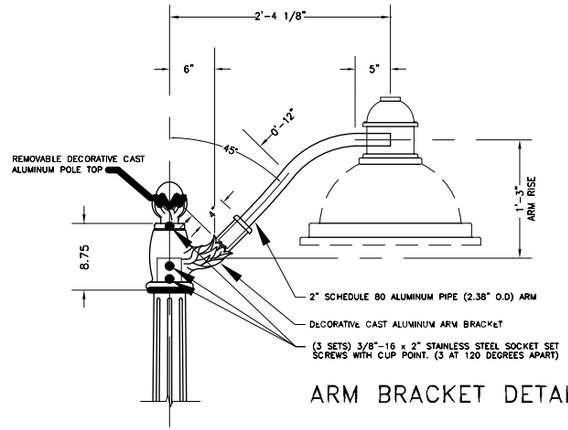

ARM BRACKET DETAIL

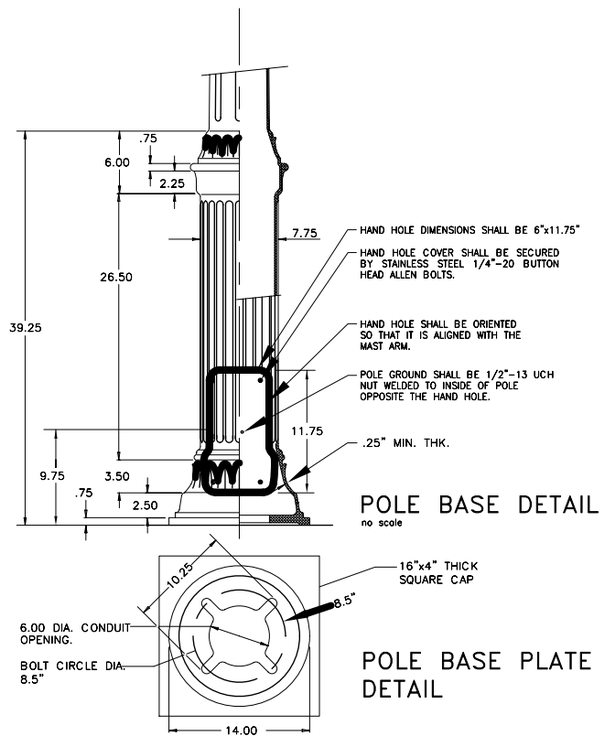

POLE BASE DETAIL
no scale

POLE BASE PLATE DETAIL

NOTES:

1. THE POLE DESIGN, MATERIALS, AND CONSTRUCTION SHALL CONFORM TO AASHTO STANDARD SPECIFICATIONS FOR STRUCTURAL SUPPORTS FOR HIGHWAY SIGNS, LUMINAIRES, AND TRAFFIC SIGNALS, BASED ON A WIND SPEED OF 80 MILES PER HOUR.
2. THE POLE TO BE ONE PIECE CAST ALUMINUM.
3. THE POLE AND OTHER MISCELLANEOUS ALUMINUM PARTS SHALL BE SOLVENT CLEANED TO SSPC–SP1 SPECIFICATION TO REMOVE ALL SOLUBLE CONTAMINANTS. AFTER SURFACE PREPARATION A PRIMER COAT OF TNEMEC SERIES 66 HI BUILD EPOXOLINE OR APPROVED EQUAL SHALL BE APPLIED TO A THICKNESS OF 3 DRY MILS. THE COLOR COATING SHALL BE TNEMEC SERIES 73 ENDURA SHIELD III OR APPROVED EQUAL, APPLIED TO A MINIMUM THICKNESS OF 3 DRY MILS. THE FINAL COATING SHALL BE TNEMEC SERIES 76 ENDURA CLEAR OR APPROVED EQUAL, APPLIED TO A MINIMUM THICKNESS OF 1.5 DRY MILS. THE FINISH COLOR SHALL BE HUNTER GREEN, TNEMEC COLOR NUMBER PL20.
4. UNSTABLE SOIL MAY REQUIRE DEEPER FOUNDATION, AS DETERMINED BY THE ENGINEER.
5. THE 3/4" ANCHOR BOLT SHALL HAVE A LENGTH DETERMINED BY THE DEPTH OF THE FOUNDATION, AND SHALL EXTEND TO 6" +OR– 1" ABOVE THE BOTTOM OF THE FOUNDATION. (M–73.06)
6. ANCHOR BOLTS WITH 4 HEX NUTS, 2 FLAT WASHERS, AND 1 ANCHOR PLATE PER BOLT SHALL BE HOT DIPPED GALVANIZED PER M–73.06.
7. ANCHOR BOLTS SHALL HAVE FULL THREAD THROUGH NUT AND WASHER WITH A 2–1/2" PROJECTION ABOVE THE FINISHED CAP (M–73.06).
8. TWO 1–1/2" SCHEDULE 40 PVC DEGREE BEND CONDUITS WITH A RADIUS OF NOT LESS THAN 18" (FACTORY BENDS ONLY SHALL BE USED). CONDUIT SHALL PROJECT A MINIMUM OF 2" ABOVE FINISHED CAP, MAXIMUM PROJECTION SHALL BE 4".
9. 16" SQUARE x 4" THICK CONCRETE CAP.
10. CLASS A CONCRETE PER M.A.G. STANDARD 725.
11. #6 XHHW GREEN INSULATED COPPER STRANDED BOND WIRE.
12. 14" COPPER GROUNDING PLATE. (M–73.06)

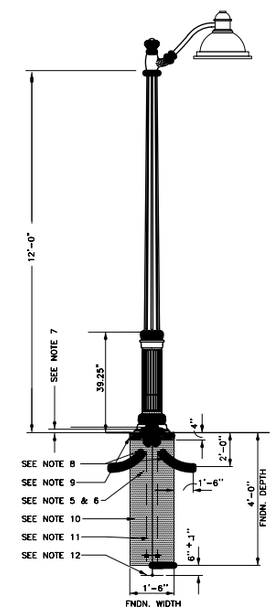

P–904
PEDESTRIAN POLE DETAIL

NOT TO SCALE

mesa·az

TOWN CENTER DECORATIVE PEDESTRIAN POLE SPECIFICATION

DETAIL NO.
M-78.04

REV. 02/04/13

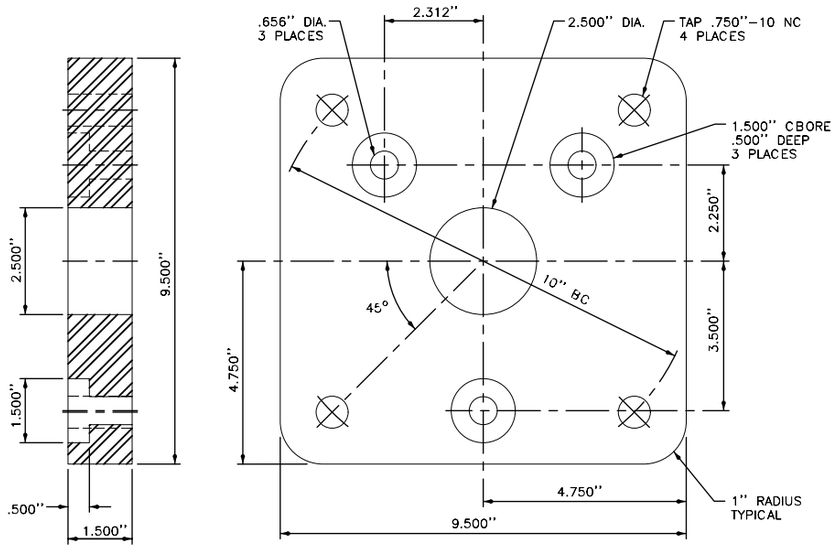

AP-101 ADAPTOR PLATE DETAIL SMALL BOLT PATTERN

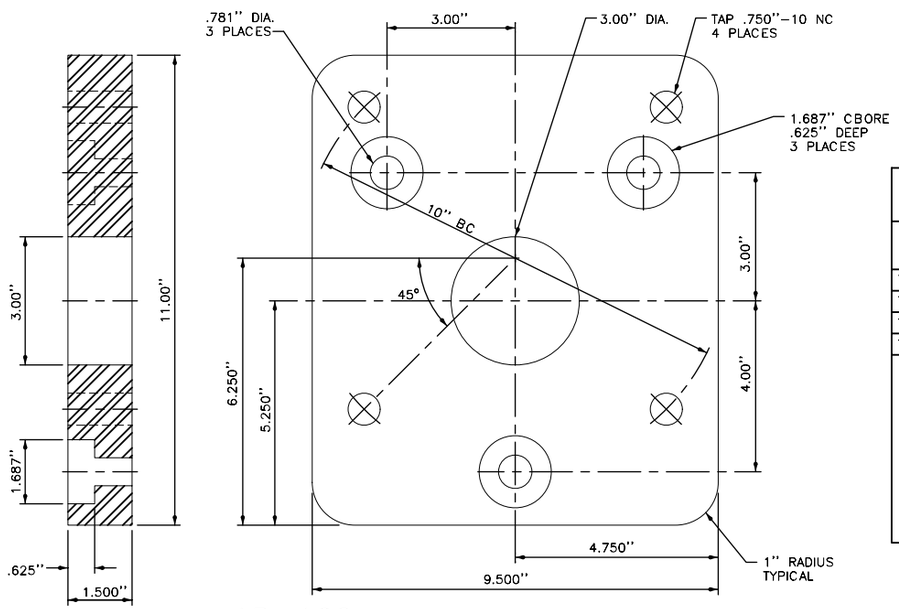

AP-102 ADAPTOR PLATE DETAIL LARGE BOLT PATTERN

GENERAL NOTES:

1. THE MAST ARM DESIGN, ADAPTOR PLATE, AND MATERIALS SHALL CONFORM TO ASSHTO STANDARD SPECIFICATIONS FOR STRUCTURAL SUPPORTS FOR HIGHWAY SIGNS, LUMINAIRES, AND TRAFFIC SIGNALS BASED ON A WIND SPEED OF 80 MILES PER HOUR.
2. THE MAST ARM, ADAPTOR PLATE, AND ALL PARTS SHALL BE STEEL.
3. THE MAST ARM, ADAPTOR PLATE, AND ALL PARTS SHALL BE HOT DIPPED GALVANIZED PER M.A.G. STD. 771.
4. ADAPTOR PLATE AP-101 (SMALL BOLT PATTERN) REQUIRES THREE 5/8"x2"-11 NC HIGH STRENGTH BOLTS.
5. ADAPTOR PLATE AP-102 (LARGE BOLT PATTERN) REQUIRES THREE 3/4"x2"-10 NC HIGH STRENGTH BOLTS.
6. THE MAST ARM REQUIRES FOUR 3/4"x2 1/2" 10 NC HIGH STRENGTH BOLTS.
7. LOCTITE #262 OR EQUAL SHALL BE APPLIED TO ALL BOLTS.
8. A METAL TAG SHALL BE PERMANENTLY ATTACHED ON THE BOTTOM OF THE MAST ARM NEAR THE BASE STATING THE MANUFACTURER'S NAME, C.O.M. ARM #, ARM LENGTH, AND ARM RISE.

DATA TABLE

ARM #	ARM LENGTH	ARM RISE	ARM O.D. AT LUMINAIRE	ARM O.D. AT FLANGE
TS-101	18'-0"	12'-6"	2 3/8"	6"
TS-102	20'-0"	12'-6"	2 3/8"	6"
TS-103	18'-0"	10'-6"	2 3/8"	6"
TS-104	20'-0"	10'-6"	2 3/8"	6"

NOTES:

① ARM #'S TS-101 & TS-102 ARE TO BE USED WITH ADAPTOR PLATE TO RAISE LUMINAIRE ON TRAFFIC SIGNAL POLE 28'-0" TO 40'-0".

② ARM #'S TS-103 & TS-104 ARE TO BE USED WITH ADAPTOR PLATE TO RAISE LUMINAIRE ON TRAFFIC SIGNAL POLE 30'-0" TO 40'-0".

③ ARM #'S TS-103 & TS-104 ARE TO BE USED WITH ADAPTOR PLATE (AP-102) TO RAISE LUMINAIRE ON TRAFFIC SIGNAL POLE (M-92.04, M-92.05) 35'-0" TO 45'-0".

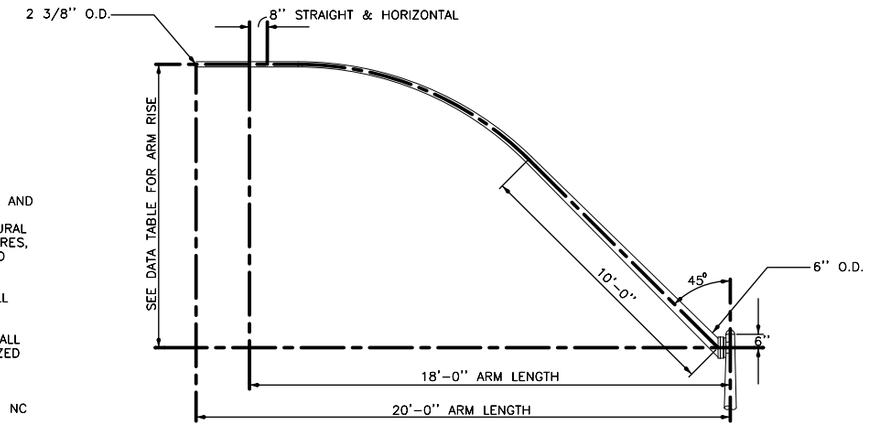

MAST ARM DETAIL

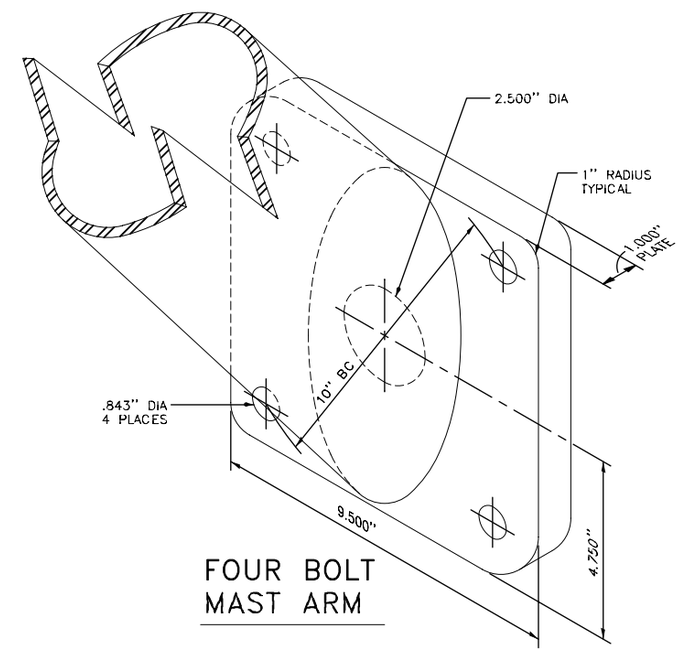

FOUR BOLT MAST ARM

NOT TO SCALE

mesa·az

MAST ARM AND ADAPTOR PLATES TO RAISE LUMINAIRES ON TRAFFIC SIGNAL POLES

DETAIL NO. M-79.01

REV. 02/04/13

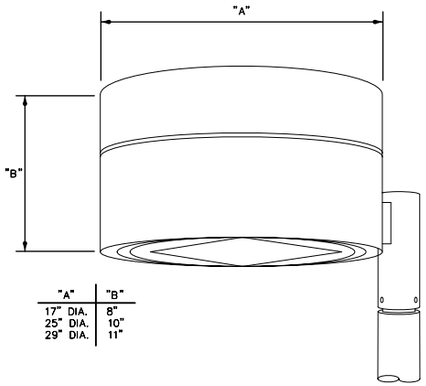

"A"	"B"
17" DIA.	8"
25" DIA.	10"
29" DIA.	11"

ARM MOUNTED LUMINAIRE

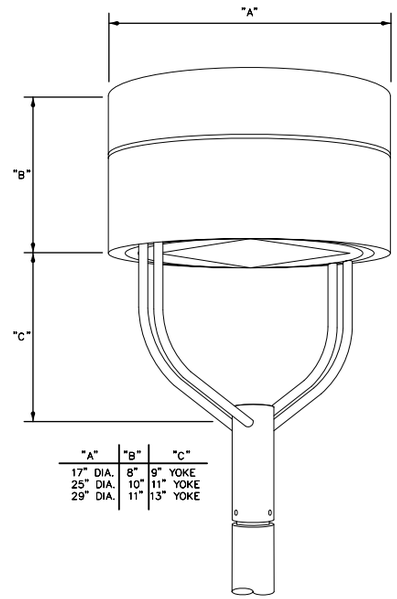

"A"	"B"	"C"
17" DIA.	8"	9" YOKE
25" DIA.	10"	11" YOKE
29" DIA.	11"	13" YOKE

YOKE MOUNTED LUMINAIRE

GENERAL DESCRIPTION

TO FURNISH A PARK LUMINAIRE IN ACCORDANCE WITH THE REQUIREMENTS OF THIS SPECIFICATION AND DESIGNED FOR PARK LIGHTING WITH GENERAL SHAPE AS SHOWN.

DATA TABLE

LUMINAIRE NUMBER CODE

LA = ARM MOUNTED LUMINAIRE LY = YOKE MOUNTED LUMINAIRE	17 = 17" DIA. 25 = 25" DIA. 29 = 29" DIA.	07 = 70 WATT 10 = 100 WATT 15 = 150 WATT 25 = 250 WATT 40 = 400 WATT 100 = 1000 WATT	.2 = TYPE II DIST .3 = TYPE III DIST .4 = TYPE VI DIST .5 = TYPE V DIST	S = HIGH PRESSURE SODIUM M = METAL HALIDE

LUMINAIRE NUMBER EXAMPLE

LA	–	17	07	.2	S

AVAILABLE LUMINAIRES

LA-1707.2S	LY-1707.2S	LA-2515.2S	LY-2515.2S	LA-29100.3S	LY-29100.3S
LA-1707.2M	LY-1707.2M	LA-2515.2M	LY-2515.2M	LA-29100.3M	LY-29100.3M
LA-1707.3S	LY-1707.3S	LA-2515.3S	LY-2515.3S	LA-29100.5S	LY-29100.5S
LA-1707.3M	LY-1707.3M	LA-2515.3M	LY-2515.3M	LA-29100.5M	LY-29100.5M
LA-1707.4S	LY-1707.4S	LA-2515.4S	LY-2515.4S		
LA-1707.4M	LY-1707.4M	LA-2515.4M	LY-2515.4M		
LA-1707.5S	LY-1707.5S	LA-2515.5S	LY-2515.5S		
LA-1707.5M	LY-1707.5M	LA-2515.5M	LY-2515.5M		
LA-1710.2S	LY-1710.2S	LA-2525.2S	LY-2525.2S		
LA-1710.2M	LY-1710.2M	LA-2525.2M	LY-2525.2M		
LA-1710.3S	LY-1710.3S	LA-2525.3S	LY-2525.3S		
LA-1710.3M	LY-1710.3M	LA-2525.3M	LY-2525.3M		
LA-1710.4S	LY-1710.4S	LA-2525.4S	LY-2525.4S		
LA-1710.4M	LY-1710.4M	LA-2525.4M	LY-2525.4M		
LA-1710.5S	LY-1710.5S	LA-2525.5S	LY-2525.5S		
LA-1710.5M	LY-1710.5M	LA-2525.5M	LY-2525.5M		
LA-1715.2S	LY-1715.2S	LA-2540.2S	LY-2540.2S		
LA-1715.2M	LY-1715.2M	LA-2540.2M	LY-2540.2M		
LA-1715.3S	LY-1715.3S	LA-2540.3S	LY-2540.3S		
LA-1715.3M	LY-1715.3M	LA-2540.3M	LY-2540.3M		
LA-1715.4S	LY-1715.4S	LA-2540.4S	LY-2540.4S		
LA-1715.4M	LY-1715.4M	LA-2540.4M	LY-2540.4M		
LA-1715.5S	LY-1715.5S	LA-2540.5S	LY-2540.5S		
LA-1715.5M	LY-1715.5M	LA-2540.5M	LY-2540.5M		

COLOR TABLE

COLOR	=	COLOR NUMBER
MONTE CARLO	=	PL16
ECHO GREEN	=	G1280
BLACK	=	IN06
VAPOR GRAY	=	GR02
NATURAL ALUM	=	NONE

APPROVED MANUFACTURERS: KIM CC SERIES, GARDCO HARDTOP CW, STERNER ELEMENTS HUMBOLDT.

REQUIREMENTS

A. HOUSING

1. THE HOUSING SHALL BE ONE PIECE SPUN AND/OR FORMED EXTRUDED ALUMINUM WITH A ROLLED-FORMED FLANGE.
2. DECORATIVE RIBS OR REVEAL MAY BE ROLLED AND/OR FORMED INTO THE SIDEWALLS.
3. SIDEWALLS SHALL BE FREE WELDS OR FASTENERS.
4. INTERNAL ALUMINUM CASTING PROVIDES REINFORCEMENT AND MOUNTING SUPORT FOR COMPONENTS AND SIDE ARM.
5. THE HOUSING SHALL BE DESIGNED FOR 90-DEGREE CUTOFF.
6. THE HOUSING SHALL BE OF ONE DOOR WITH ACESS TO BOTH THE OPTICAL AND ELECTRIC SYSTEMS. THE SYSTEMS SHALL BE HINGED AND REMOVABLE FOR EASE OF SERVICING.
7. THE HOUSING SHALL BE ABLE TO WITHSTAND 1000-HOUR SALT SPRAY TEST PER ASTM 117.
8. THE HOUSING SHALL BE ABLE TO BE LEVELED EASILY WITH LITTLE EFFORT.

B. ARM MOUNTED LUMINAIRE

1. EXTRUDED ALUMINUM ARM (RECTANGULAR) WITH INTERNAL CHANNELS/BOLT GUIDES.
2. TWO INTERNAL BOLTS AND OR THREADED GALVANIZED STEEL TIE RODS COMPLETE WITH LOCK NUTS.
3. REINFORCING PLATE WITH WIRE STRAIN RELIEF.
4. ARM TO BE CIRCULAR CUT TO MATE WITH ROUND SLIPFITTER AND LUMINAIRE.
5. CAST ALUMINUM SLIPFITTER (ROUND) SHALL FIT A POLE WITH A TOP TENON 2-3/8" O.D. x 4-1/2".
6. ATTACHMENT OF THE SLIPFITTER SHALL BE ACCOMPLISHED BY FOUR 3/8" STAINLESS STEEL ALLEN SCREWS.

C. YOKE MOUNTED LUMINAIRE

1. A CAST ALUMINUM SLIPFITTER (ROUND) SHALL SUPPORT THE HOUSING WITH TUBULAR PARALLEL YOKES AT FOUR POINTS.
2. CAST ALUMINUM SLIPFITTER (ROUND) SHALL FIT A POLE WITH A TOP TENON 2-3/8" O.D. x 4-1/2".
3. ATTACHMENT AND LEVELING OF THE SLIPFITTER SHALL BE ACCOMPLISHED BY FOUR 3/8" STAINLESS STEEL ALLEN SCREWS.
4. CAST ALUMINUM SLIPFITTER SHALL PROVIDE A SPLICE COMPARTMENT.

D. FINISH

1. A PRIMER COAT OF TNEMEC SERIES 66 HI BUILD EPOXOLINE OR APPROVED EQUAL SHALL BE APPLIED TO A DRY THICKNESS OF 3 MILS.
2. THE FINISH COATING SHALL BE TNEMEC SERIES 73 ENDURA SHIELD III OR APPROVED EQUAL, APPLIED TO A DRY THICKNESS OF 3 MILS.
3. THE FINISH COLOR CALLED OUT IN THE PLANS AND/OR SPECIFICATIONS SHALL BE TNEMEC COLOR NUMBER (SEE COLOR TABLE).
4. THE FINAL COATING SHALL BE TNEMEC SERIES 76 ENDURA CLEAR OR APPROVED EQUAL, APPLIED TO A MINIMUM DRY THICKNESS OF 1.5 MILS.

E. LAMP SOCKET

1. THE LAMP SOCKET SHALL BE MOGUL MULTIPLE PORCELAIN ENCLOSED. THE RATING OF THE SOCKET SHALL EXCEED THE LAMP STARTING VOLTAGE.
2. THE SCREW SHELL OF THE SOCKET SHALL CONTAIN INTEGRAL LAMP GRIPS TO ASSURE ELECTRICAL CONTACT UNDER CONDITIONS OF NORMAL VIBRATION.
3. THE SOCKET SHALL CONFORM TO TDJ-147 SPECIFICATION SECTION OF EEI STANDARDS.
4. THE SOCKET SHALL BE IN A HORIZONTAL POSITION.

F. LENS FRAME

1. THE LENS FRAME SHALL BE ONE PIECE DIE CAST ALUMINUM AND/OR PRECISION MOLDED, HIGH IMPACT COMPOSITE THERMOPLASTIC LENS FRAME.
2. THE LENS FRAME SHALL BE SECURED TO THE HOUSING AT ONE END, AND HINGED TO THE HOUSING AT THE OPPOSITE END.
3. THE HINGE SHALL BE ZINC PLATED COLD ROLLED STEEL WITH STAINLESS STEEL PIN OR A CONCEALED STAINLESS STEEL HINGE.
4. CLOSURE OF LENS FRAME SEALS REFLECTOR, SEAL SHALL BE VULCANIZED SILICONE GASKET OR HOLLOW EXTRUDED SILICONE RUBBER GASKET OR E.P.D.M. GASKET MATERIAL.

G. LENS FRAME GLASS

1. THE LENS FRAME GLASS SHALL HAVE A MINIMUM THICKNESS OF 3/16" THICK CLEAR FLAT TEMPERED GLASS FREE FROM IMPERFECTIONS AND STRIATIONS.
2. THE LENS FRAME GLASS SHALL BE REMOVABLE FOR EASE OF REPLACEMENT.
3. THE LENS FRAME GLASS SHALL BE FULLY GASKETED BY A VULCANIZED SILICONE GASKET.

H. REFLECTOR

1. THE REFLECTOR SHALL BE MADE FROM A ONE PIECE OF SHEET ALUMINUM TO FORM A HOMOGNEOUS HYDRO-FORMED SHELL.
2. THE REFLECTOR SHALL BE CHEMICALLY BRIGHTENED AND ANODIZED TO A SEMI-SPECULAR FINISH AND/OR SPECULAR SEGMENTS MOUNTED TO CREATE A REFLECTIVE SURFACE.
3. THE REFLECTOR DESIGN SHALL PRODUCE A TYPE I, II, III AND V DISTRIBUTION PATTERN (ADJUSTABLE) WITH PROPER POSITIONING OF THE LAMP SOCKET.
4. THE REFLECTOR SHALL BE FIELD ROTATABLE IN 90-DEGREE INCREMENTS.
5. THE REFLECTOR SYSTEM SHALL SEALED TO PREVENT CONTAMINATION. THE OPTICAL SYSTEM SHALL BE SEALED WITH NO VENTING OF THE OPTIC SYSTEM.
6. THE REFLECTOR SHALL BE RIGIDLY MOUNTED WITHIN THE HOUSING TO ASSURE A FIRM SURFACE FOR PROPER SEALING WHEN UNIT IS CLOSED.
7. THE REFLECTOR SHALL CAPABLE OF BEING REMOVED FOR CLEANING AND ACCESS TO BALLAST AND MOUNTING HARDWARE. REMOVAL SHALL BE DONE QUICKLY WITH QUICK RELEASE/ NON -TOOL FASTENERS. WIRE SHALL UTILIZE A QUICK- DISCONNECT PLUG.

I. TERMINAL BOARD

1. THE TERMINAL BOARD SHALL BE MOLDED OF FIBERGLASS REINFORCED POLYESTER WITH PROTECTIVE BARRIERS BETWEEN EACH TERMINAL.
2. THE TERMINAL SCREWS SHALL BE OF THE CAPTIVE TYPE AND EACH SCREW SHALL BE EQUIPPED WITH WIRE GRIPS WHICH WILL AUTOMATICALLY BE RAISED AND LOWERED AS THE TERMINAL SCREW IS OPERATED.
3. THE TERMINALS SHALL BE CAPABLE OF ACCEPTING UP TO #6 AWG CONDUCTOR.
4. THE TERMINAL BOARD SHALL HAVE THREE TERMINALS. ONE OF THESE TERMINALS SHALL BE FOR THE SYSTEMS GROUND AND SHALL BE CONNECTED TO THE FIXTURE HOUSING.
5. ALL UNITS ARE TO BE PRE-WIRED TO A SINGLE TERMINAL BOARD REQUIRING ONLY CUSTOMER CONNECTIONS TO CLEARLY IDENTIFIED TERMINALS.

J. HARDWARE

1. ALL HARDWARE SHALL BE OF NON-CORROSIVE OR SUITABLY PROTECTED METAL. WHEN NECESSARY TO PREVENT ELECTROLYTIC ACTION BY CONTACT WITH ALUMINUM, COMPONENTS SHALL BE SECURED TO THE LUMINAIRE FRAME WITH STAINLESS STEEL HARDWARE OF THE ANSI 300 SERIES CHROME-NICKLE GRADE.

K. BALLAST

1. THE BALLAST SHALL BE OF THE BUILT-IN DESIGN MOUNTED WITHIN THE LUMINAIRE IS SUCH A MANNER THAT SIMPLE DISCONNECTING PLUGS CAN EASILY DISCONNECT IT.
2. THE BALLAST AND OTHER AUXILARY EQUIPMENT SHALL ME MOUNTED IN A REMOVABLE PANEL OR TRAY.
3. THE BALLAST CORE LAMINATION SHALL BE OF HIGHEST QUALITY ELECTRICAL GRADE STEEL WELDED TOGETHER TO MINIMIZE NOISE AND ASSURE TROUBLE FREE OPERATION OVER THE LIFE OF THE LUMINAIRE.
4. THE BALLAST COILS SHALL BE PRECISION WOUND ON FORMED INSULATING BOBBINS AND TERMINALS SHALL BE OF THE PUSH ON TYPE.
5. THE HIGH PRESSURE SODIUM BALLAST SHALL BE OF THE THREE COIL ISOLATED LAG TYPE REGULATOR RATED FOR 120/208/240/277 INPUT VOLATGE.
6. THE HIGH PRESSURE SODIUM BALLAST SHALL BE CAPABLE OF STARTING AND OPERATING A HIGH PRESSURE SODIUM LAMP (WATTAGE AS SPECIFIED IN DATA TABLE) FROM THE MULT-VOLTAGE (120/208/240/277) BALLAST AT 60 HZ. POWER SOURCE WITHIN THE LIMITS SPECIFIED BY THE LAMP MANUFACTURER. THE BALLAST INCLUDING THE STARTING AID MUST PROTECT INSELF AGAINST NORMAL LAMP FAILURE MODES. THE BALLAST SHALL BE CAPABLE OF OPERATION WITH LAMP IN AN OPEN OR SHORT CIRCUIT CONDITION FOR SIX MONTHS WITHOUT SIGNIFICANT LOSS OF BALLAST LIFE.
7. THE COMPONENT TO PROVIDE THE HIGH STARTING VOLTAGE REQUIRED BY THE HIGH PRESSURE SODIUM LAMP SHALL BE MOUNTED ON A NON ENCAPSULATED PLUG-IN MODULE WHICH SHALL BE EAISLY ACESSABLE WITHOUT DISTURBING OTHER COMPONENTS OF THE BALLAST ASSEMBLY.
8. THE METAL HALIDE BALLAST SHALL BE OF THE CONSTANT WATTAGE AUTOTRANSFORMER TYPE DESIGNED FOR A (SEE DATA TABLE) WATT METAL HALIDE LAMP (PER ANSI CODE). THE BALLAST SHALL BE RATED FOR 120/208/240/277 IN PUT VOLTATGE.
9. THE METAL HALIDE BALLAST SHALL BE CAPABLE OF STARTING AND OPERATING A METAL HALIDE LAMP (WATTAGE AS SPECIFIED IN DATA TABLE) FROM THE MULTI-VOLTAGE (120/208/240/277) BALLAST AT 60HZ POWER SOURCE WITH IN THE LIMITS SPECIFIED BY THE LAMP MANUFACTURER. THE BALLAST MUST PROTECT ITSELF AGAINST NORMAL LAMP FAILURE MODES. THE BALLAST SHALL BE CAPABLE OF OPERATION WITH LAMP IN AN OPEN OR SHORT CIRCUIT CONDITION FOR SIX MONTHS WITHOUT SIGNIFICANT LOSS OF BALLAST LIFE.

NELACS OT TO

mesa·az

PARK LIGHTING LUMINAIRE SPECIFICATION

DETAIL NO.
M-80.01

REV. 02/04/13

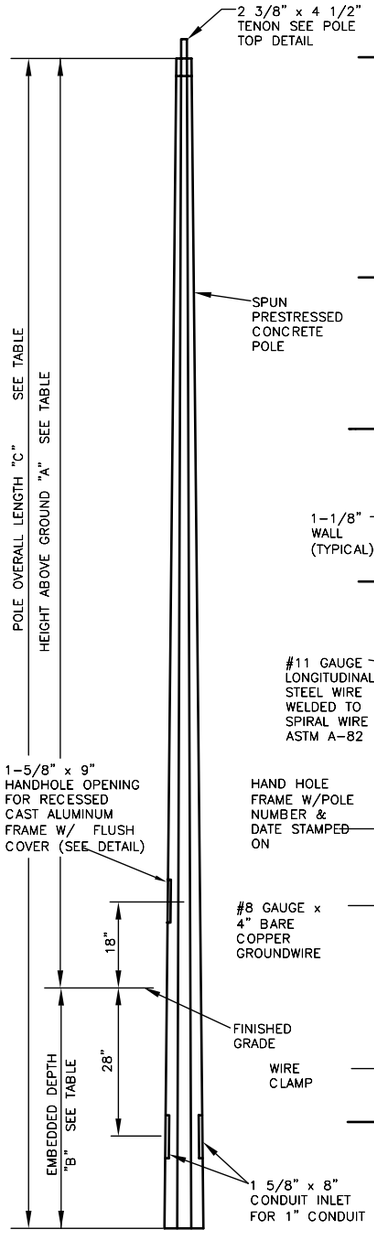

POLE ELEVATION

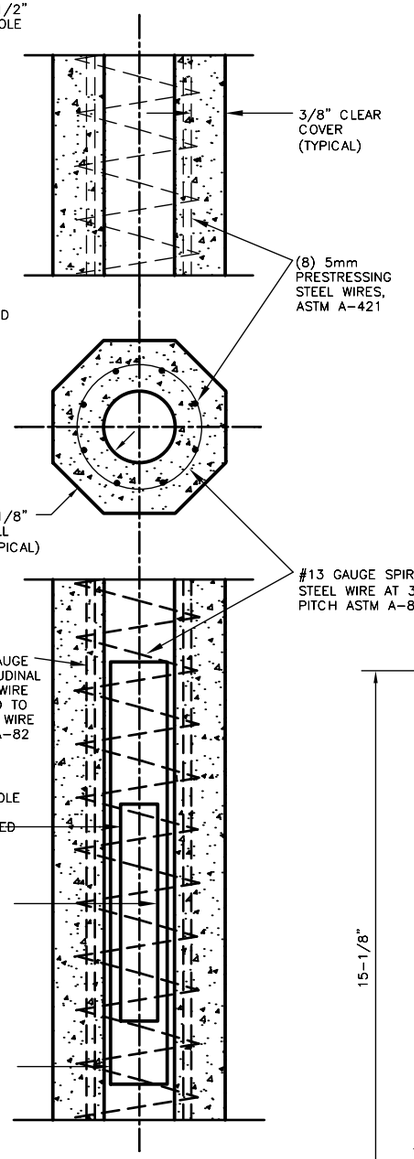

POLE SECTION

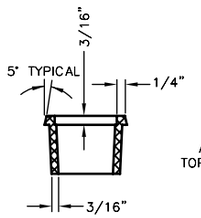

SECTION B-B

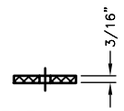

SECTION C-C

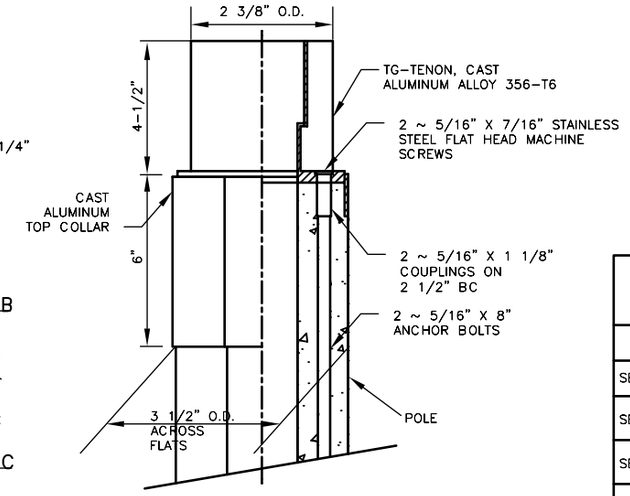

POLE TOP DETAIL

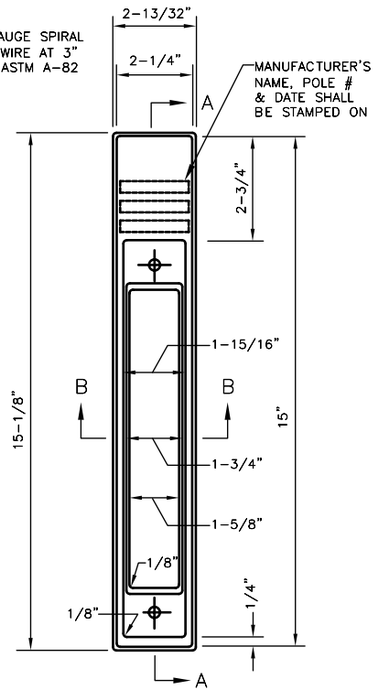

HAND HOLE FRAME

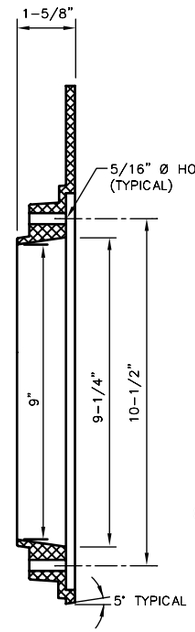

SECTION A-A

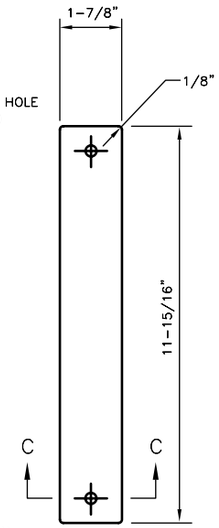

COVER

NOTES:

1. POLES SHALL BE GREEN NATURAL AGGREGATE, EXPOSED FINISH WITH CLEAR GRAFFITI COATING (AMERON COLOR #413).
2. ASTM C-150 TYPE III GRAY CEMENT, f'c @ 28 DAYS = 7,000 psi.
3. POLES MANUFACTURED TO ASTM C-1089-88.
4. LOADING SHALL BE 80 MPH ASSHTO-LTS2 WIND LOADING WITH 1.3 GUST FACTOR.
5. PAINT TENON AS DESCRIBED IN CITY OF MESA STANDARD DETAIL M-80.01 (COLOR TO MATCH LUMINAIRE).
6. ALL POLES SHALL BE INSTALLED PLUMBED TO THE VERTICAL WITH ALL LUMINAIRES INSTALLED.

POLE #	POLE HEIGHT ABOVE GROUND	POLE EMBEDDED DEPTH	OVERALL LENGTH	DEPTH OF FOUND-ATION	BUTT DIAMETER ACROSS FLATS	ULTIMATE G.L. MOMENT (FT. LBS.)	WEIGHT LBS
-	A	B	C	D	-	-	-
SEO-209	9'-10"	3'-3"	13'-1"	4'-0"	5 5/8"	5,120	250
SEO-213	13'-1"	3'-3"	16'-4"	4'-0"	6 1/8"	6,960	280
SEO-214	14'-1"	4'-0"	18'-1"	4'-6"	6 3/8"	7,080	330
SEO-216	16'-5"	3'-7"	20'-0"	4'-6"	6 11/16"	8,400	380
SEO-219	19'-8"	3'-11"	23'-7"	4'-6"	7 5/16"	9,960	470
SEO-223	23'-0"	4'-3"	27'-3"	5'-0"	7 7/8"	11,630	600

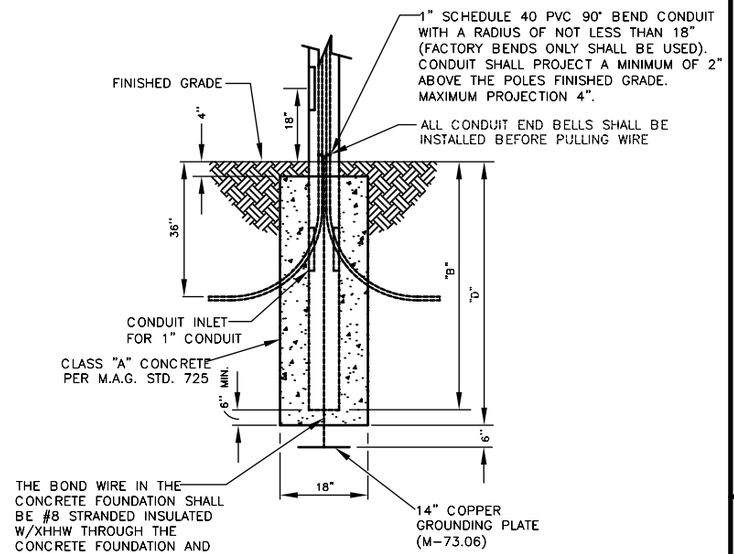

FOUNDATION DETAIL

NELACS OT TO

mesa·az

SMALL EMBEDDED OCTAGONAL CONCRETE POLE SPECIFICATION

DETAIL NO. M-83.01

REV. 02/04/13

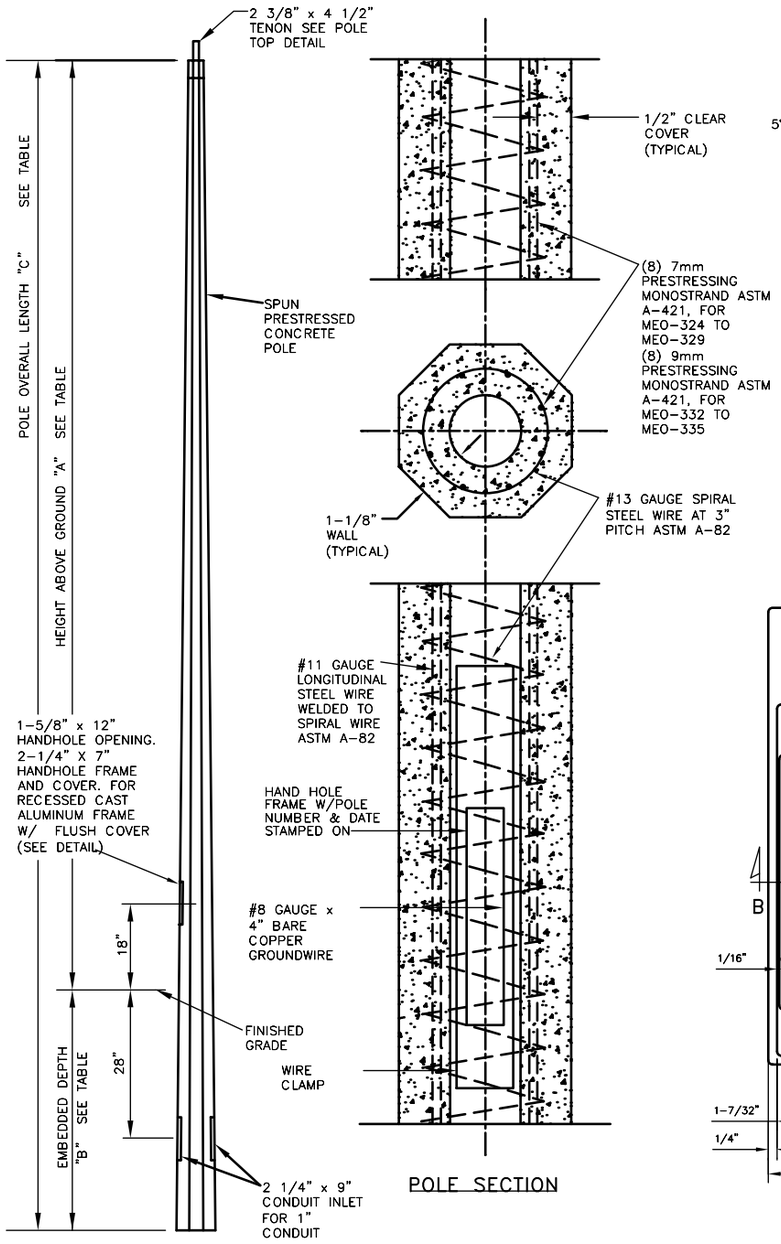

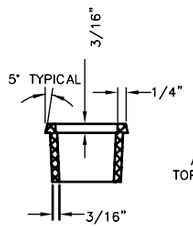

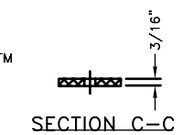

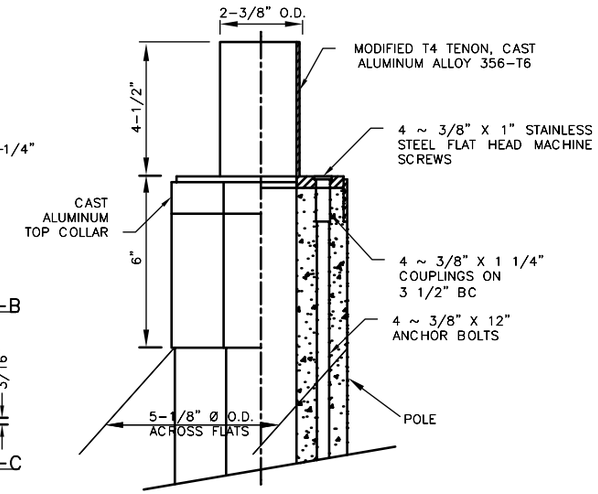

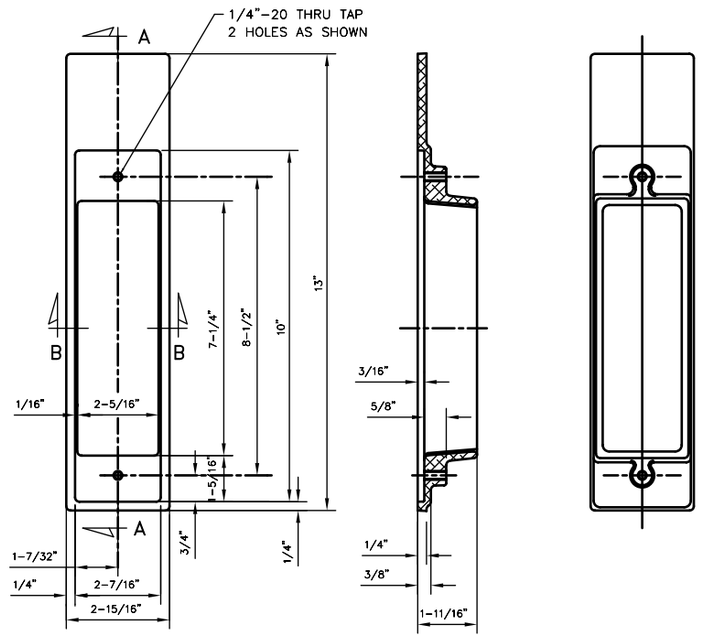

NOTES:

1. POLES SHALL BE GREEN NATURAL AGGREGATE, EXPOSED FINISH WITH CLEAR GRAFFITI COATING (AMERON COLOR #413).
2. ASTM C-150 TYPE III GRAY CEMENT, f'c @ 28 DAYS = 7,000 psi.
3. POLES MANUFACTURED TO ASTM C-1089-88.
4. LOADING SHALL BE 80 MPH ASSHTO-LTS2 WIND LOADING WITH 1.3 GUST FACTOR.
5. PAINT TENON AS DESCRIBED IN CITY OF MESA STANDARD DETAIL M-80.01 (COLOR TO MATCH LUMINAIRE).
6. ALL POLES SHALL BE INSTALLED PLUMBED TO THE VERTICAL WITH ALL LUMINAIRES INSTALLED.

POLE #	POLE HEIGHT ABOVE GROUND	POLE EMBEDDED DEPTH	OVERALL LENGTH	DEPTH OF FOUND-ATION	BUTT DIAMETER ACROSS FLATS	ULTIMATE G.L. MOMENT (FT. LBS.)	WEIGHT LBS
-	A	B	C	D	-	-	-
MEO-324	24'-7"	4'-11"	29'-6"	5'-6"	8 9/16"	19,910	980
MEO-326	26'-3"	4'-11"	31'-2"	5'-6"	8 13/16"	20,790	1,100
MEO-327	27'-11"	4'-11"	32'-10"	5'-6"	9"	21,660	1,250
MEO-329	29'-6"	5'-3"	34'-9"	6'-0"	9 1/4"	22,540	1,300
MEO-332	32'-10"	5'-7"	38'-5"	6'-6"	9 3/4"	24,280	1,500
MEO-335	35'-0"	5'-7"	40'-7"	6'-6"	10"	31,800	1,600

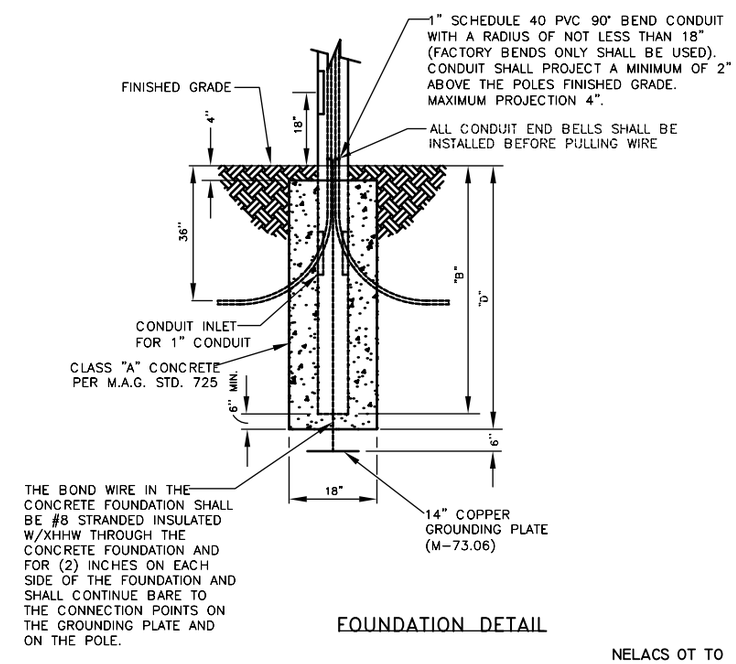

NELACS OT TO

mesa·az

MEDIUM EMBEDDED OCTAGONAL CONCRETE POLE SPECIFICATION

DETAIL NO. M-83.02

REV. 02/04/13

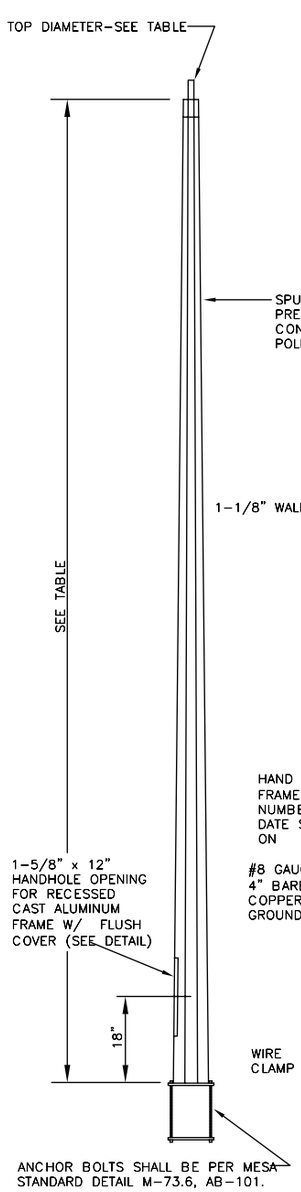

POLE ELEVATION

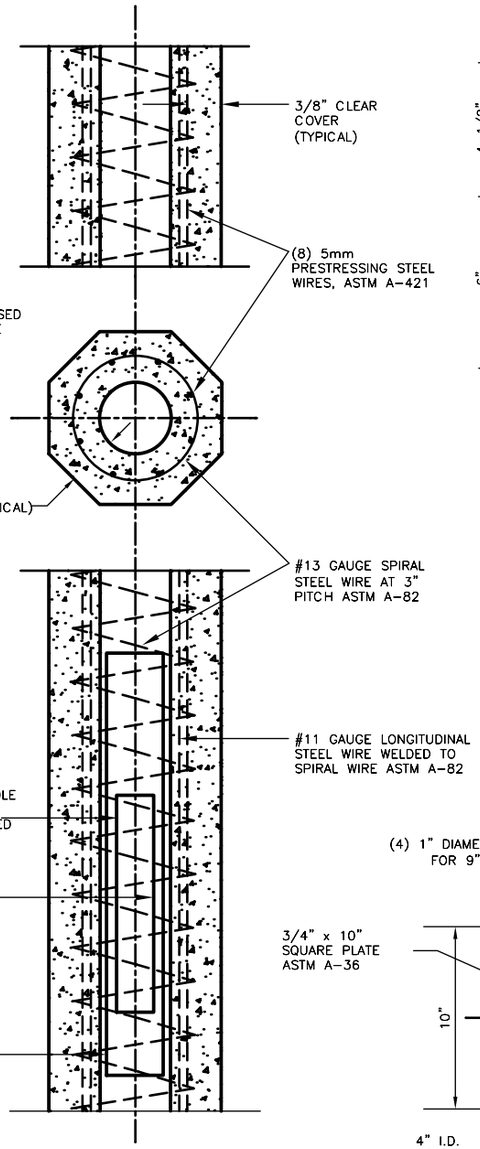

POLE SECTION

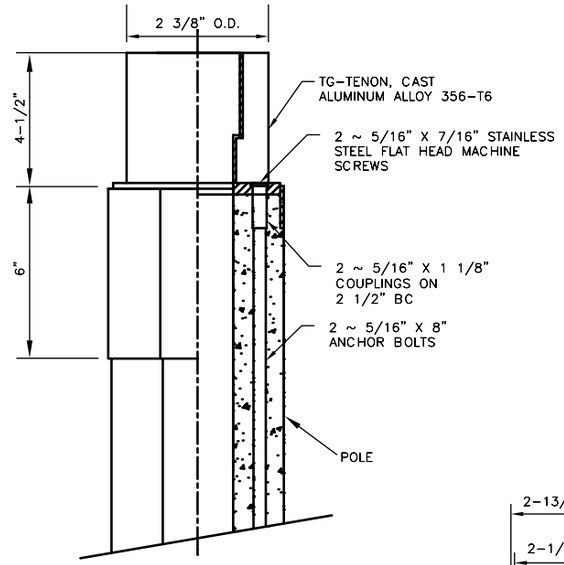

POLE TOP DETAIL

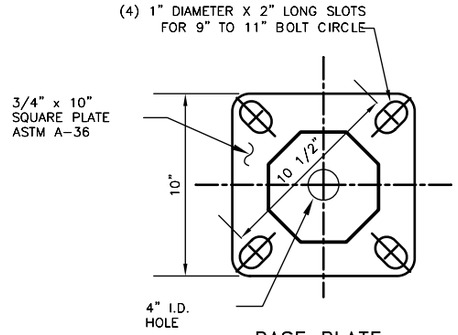

BASE PLATE

NOTES:

1. POLES SHALL BE GREEN NATURAL AGGREGATE, EXPOSED FINISH WITH CLEAR GRAFFITI COATING (AMERON COLOR #413).
2. ASTM C-150 TYPE III GRAY CEMENT, f'c @ 28 DAYS = 7,000 psi.
3. POLES MANUFACTURED TO ASTM C-1089-88.
4. LOADING SHALL BE 80 MPH ASSHTO-LTS2 WIND LOADING WITH 1.3 GUST FACTOR.
5. PAINT BASE PLATE AND TENON AS DESCRIBED IN CITY OF MESA STANDARD DETAIL M-80.01 (COLOR TO MATCH LUMINAIRE).
6. ALL POLES SHALL BE INSTALLED PLUMBED TO THE VERTICAL WITH ALL LUMINAIRES INSTALLED.
7. FOUNDATION SHALL BE INSTALLED PER MESA STANDARD DETAIL M-76.01, F-106, AND M-76.02. SEE 2' RAISED FOUNDATION DETAIL WHEN SPECIFIED.

POLE #	POLE HEIGHT ABOVE FNDN.	SLOTTED BOLT CIRCLE	ULTIMATE G.L. MOMENT (FT. LBS.)	WEIGHT LBS	POLE TOP DIAMETER (INCHES)	SPECIAL BASE PLATE SIZE
CPB-114	14'-4"	9" TO 11"	7,500	270	3-7/8"	SZ
CPB-123	23'-0"	9" TO 11"	7,500	480	3-1/2"	SM
CPB-127	27'-3"	9" TO 11"	7,500	620	3-1/2"	SN

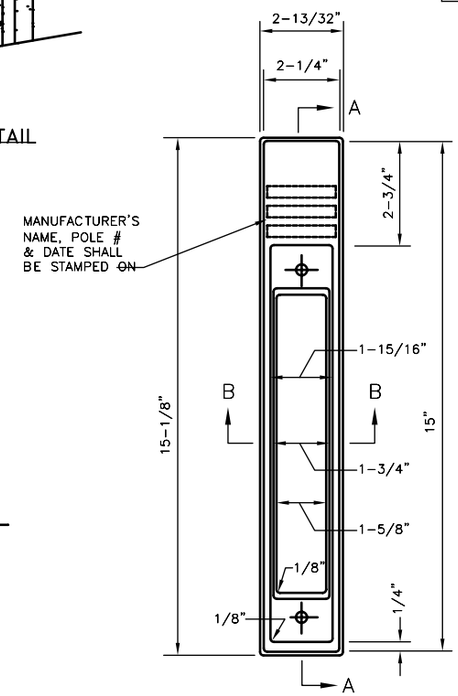

HAND HOLE FRAME

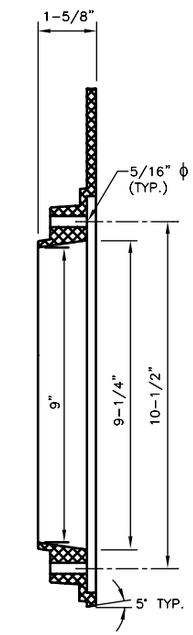

SECTION A-A

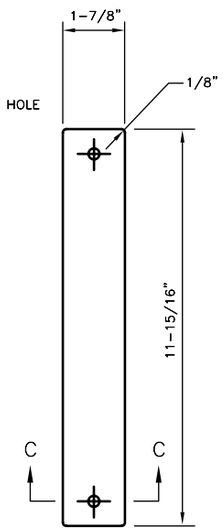

COVER

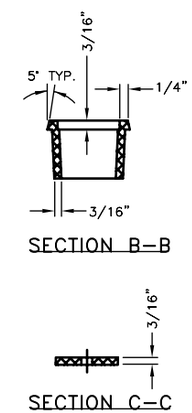

SECTION B-B

SECTION C-C

NELACS OT TO

BASE MOUNTED OCTAGONAL CONCRETE POLE SPECIFICATION

DETAIL NO. M-83.03

REV. 02/04/13

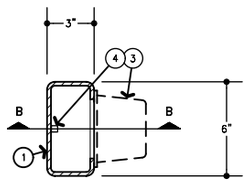

SECTION A

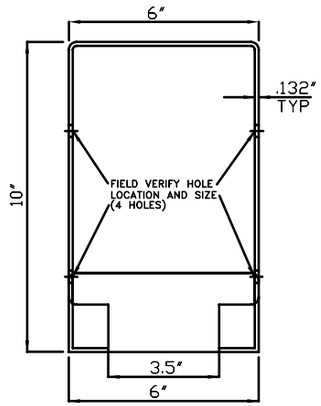

FRONT VIEW

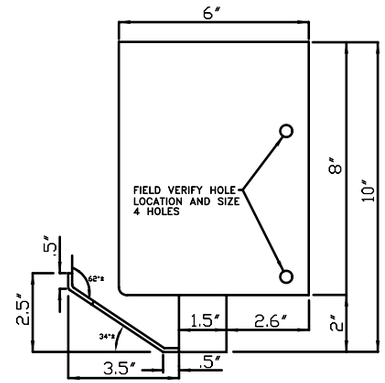

SIDE VIEW

VANDAL PROOF RECEPTACLE COVER

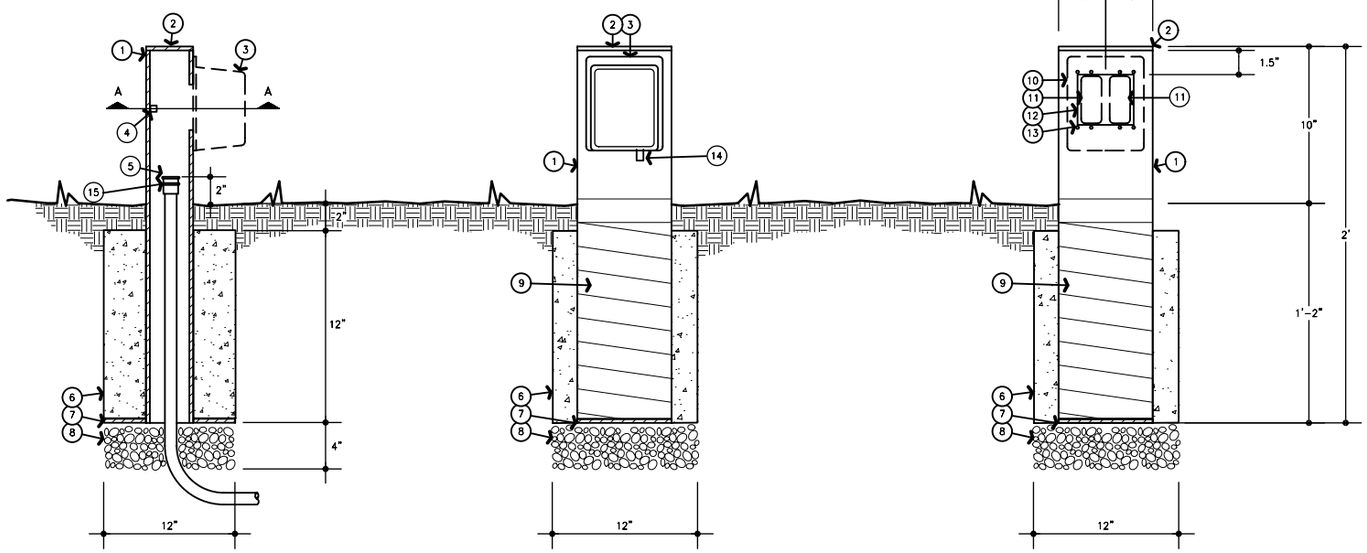

SECTION B

FRONT ELEVATION
(WEATHERPROOF COVER INSTALLED)

FRONT ELEVATION
(WEATHERPROOF COVER OFF)

KEYED NOTES

1. RECTANGULAR STRAIGHT STEEL TUBE, 3"x6"x24" LONG, 3/16" THICK. PRIME WITH TNEMEC SERIES 66 HI BUILD EPOXOLINE OR APPROVED EQUAL TO A DRY THICKNESS OF 3 MILLS. FINISH COLOR SHALL BE A VAPOR GRAY FINISH, COLOR NUMBER GR02. THE FINAL COAT SHALL BE TNEMEC SERIES 76 INDURA CLEAR OR APPROVED EQUAL, APPLIED TO A MINIMUM OF 1.5 DRY MILS.
2. 1/8" THICK STEEL TOP. PROVIDE CONTINUOUS WELD ALONG PERIMETER OF CAP. PRIME AND PAINT TO THE SAME SPECIFICATIONS AS THE LIGHT POLES SPECIFIED FOR THIS PROJECT.
3. DIE CAST METAL TWO-GANG WEATHERPROOF WHILE IN USE OUTLET COVER WITH DOUBLE GFCI BASE CONFIGURATION. COVER SHALL BE EQUAL TO INTERMATIC WP1000 SERIES. PAINT COVER VAPOR GRAY FINISH, TNEMEC COLOR NUMBER GR02.
4. WELD A 1/4" STEEL NUT ONTO THE INSIDE FACE OF THE STEEL TUBE OPPOSITE THE CONVENIENCE RECEPTACLES FOR ATTACHING SYSTEM GROUND WIRING.
5. STUB UNDERGROUND CONDUITS 2" ABOVE FINISHED GRADE INSIDE STEEL TUBE.
6. MAG CLASS B CONCRETE.
7. TWO 3"x6"x3/16" STEEL PLATES (ONE EACH SIDE) WELDED TO THE BASE OF THE STEEL TUBE.
8. 1" ROCK.
9. PROVIDE 1/8" THICK BITUMINOUS COATING ON THE INSIDE AND OUTSIDE OF THE STEEL TUBE AS INDICATED. WRAP THE OUTSIDE OF THE TUBE WITH 10 MIL PLASTIC TAPE, HALF LAPPED.
10. OUTLINE OF WEATHERPROOF COVER.
11. OUTLINE DUPLEX RECEPTACLE.
12. OUTLINE OF RECTANGULAR HOLE IN STEEL TUBE FOR DUPLEX CONVENIENCE RECEPTACLES.
13. DRILL AND TAP HOLES IN STEEL TUBE FOR MOUNTING RECEPTACLES AND WEATHERPROOF COVER.
14. HASP FOR SMALL PAD LOCK.
15. ALL CONDUIT END BELLS SHALL BE INSTALLED BEFORE PULLING WIRE.

NOT TO SCALE

mesa·az

OUTDOOR CONVENIENCE RECEPTACLE SPECIFICATION

DETAIL NO.
M-85.01

REV. 01/14/2015

DESCRIPTION

1. IT IS THE PURPOSE OF THIS DOCUMENT TO PROVIDE THE GENERAL INFORMATION NECESSARY TO DEFINE THE VARIANCES OF WORK ON TRAFFIC SIGNALS BETWEEN ADOT SPECIFICATIONS & STANDARDS AND THE CITY OF MESA SPECIFICATIONS & STANDARDS.

SPECIFICATIONS AND STANDARDS INCORPORATED IN THIS DOCUMENT

1. MESA STANDARD DETAILS AMENDMENT TO THE UNIFORM STANDARD DETAILS: CURRENT. SEE "CITY OF MESA" WEB SITE (WWW.MESAAZ.GOV/ENGINEERING/MESASTANDARDANDSPECS.ASPX).
2. FOR ITS/TRAFFIC SIGNALS APPROVED PRODUCT SPECIFICATIONS, SEE "CITY OF MESA" WEB SITE (WWW.MESAAZ.GOV/TRANSPORTATION/TRAFFIC_SIGNALS_ SPECIFICATIONS.ASPX).
3. ARIZONA DEPARTMENT OF TRANSPORTATION STANDARD SPECIFICATIONS FOR ROAD AND BRIDGE CONSTRUCTION: CURRENT.
4. ADOT TRAFFIC SIGNALS & LIGHTING CURRENT HIGHWAYS STANDARD DRAWINGS.
5. NATIONAL ELECTRICAL MANUFACTURERS ASSOCIATION, TRAFFIC CONTROL SYSTEMS, STANDARDS PUBLICATION: TS2-2003 VER 2.06.
6. INTERNATIONAL MUNICIPAL SIGNAL ASSOCIATION, INC., WIRE AND CABLE SPECIFICATIONS: CURRENT.
7. MANUAL ON UNIFORM TRAFFIC CONTROL DEVICES FOR STREETS AND HIGHWAYS: USDOT/FHWA: CURRENT.
8. AMERICAN ASSOCIATION OF STATE AND HIGHWAY TRANSPORTATION OFFICIALS (AASHTO) STANDARD SPECIFICATIONS FOR STRUCTURAL SUPPORTS FOR HIGHWAY SIGNS, LUMINAIRES AND TRAFFIC SIGNALS: 1994.

ENGINEERING

1. THE CITY OF MESA TRANSPORTATION DIRECTOR ACTING BY AND UNDER THE AUTHORITY OF THE ORDINANCES OF THE CITY OF MESA; AN ASSISTANT OR OTHER REPRESENTATIVE DULY AUTHORIZED BY THE TRANSPORTATION DIRECTOR TO ACT FOR HIM.

FOUNDATIONS

1. ALL CITY OF MESA CABINET FOUNDATIONS SHALL BE ADOT TYPE V (ADOT TS 2-4), WITH THE FOLLOWING CHANGE: THE WIDTH OF THE FOUNDATION BASE (DIMENSION "B") SHALL BE 50" NOT 48". SEE COM DETAIL M-92.01 FOR FOUNDATION DETAILS.
2. A TEN FOOT COPPER GROUND ROD SHALL BE INSTALLED IN ANY CABINET FOUNDATION, SERVICE PEDESTAL AND UPS (PEDESTAL) FOUNDATION BEFORE CONCRETE IS POURED.
3. ANY SIGNAL APPURTENANCE THAT IS SUBJECT TO BEING INSTALLED ON A SLOPE MAY REQUIRE A RETAINING WALL AT THE ENGINEER'S DISCRETION.
4. ANY POLE THAT HAS A PEDESTRIAN PUSH BUTTON STATION ON IT AND THE STATION IS NOT DIRECTLY NEXT TO THE SIDEWALK, SHALL HAVE AN ACCESS PAD INSTALLED TO MEET THE REQUIREMENTS OF THE AMERICANS WITH DISABILITIES ACT. THIS PAD IS ADDITIONAL SIDEWALK BETWEEN EXISTING SIDEWALK AND THE POLE BASE. PAD PLACEMENT SHALL BE AS SHOWN ON PLANS OR AS APPROVED BY THE INSPECTOR PER COM DETAIL M-44.1.
5. ALL POLE FOUNDATIONS SHALL MATCH BACK OF SIDEWALK -0+2" TOLERANCE, AS SHOWN IN DETAIL M-92.03.

CONDUIT

1. SCHEDULE 40 PVC CONDUITS PLACED IN CABINETS, PULL BOXES, AND FOUNDATIONS SHALL HAVE END BELLS INSTALLED BEFORE PULLING IN WIRE OR CABLE.
2. ALL CONDUIT SHALL BE SCHEDULE 40 PVC OR HDPE SDR-11 UNLESS OTHERWISE SPECIFIED ON PLANS.
3. ALL CONDUITS SHALL HAVE AS A MINIMUM ONE GREEN #8 THHN/THWN COPPER STRANDED BOND WIRE PULLED INTO CONDUITS WITH A MINIMUM OF 3 (THREE) FEET OF WIRE PAST CONDUIT ENDS.
4. CAP ALL UNUSED AND FUTURE CONDUITS WITH A TYCO (JACKMOON EXPANDABLE) PVC PLUG. CAP ALL FIBER FILLED CONDUITS WITH A TYCO FIBER OPTIC SIMPLEX PLUG.

PULL BOXES & VAULTS

1. IF CALLED FOR ON THE PLANS THE CONTRACTOR SHALL SUPPLY THE PULLBOX(S). SEE "CITY OF MESA" WEB SITE (WWW.MESAAZ.GOV/TRANSPORTATION/TRAFFIC_SIGNALS _SPECIFICATIONS.ASPX) FOR CURRENT SPECIFICATION.
2. REFER TO COM DETAIL M-66.1, 4 X 4 X 4 VAULT DETAILS.
3. REFER TO COM DETAIL M-66.2, FOR ROUND LID, IT SHALL READ "CITY OF MESA ITS FIBER OPTIC".

CONTROLLER CABINET ASSEMBLY

1. UNLESS OTHERWISE NOTED ON THE PLANS THE CONTRACTOR SHALL SUPPLY THE CONTROLLER CABINET. SEE "CITY OF MESA" WEB SITE (WWW.MESAAZ.GOV/TRANSPORTATION/TRAFFIC_SIGNALS_SPECIFICATIONS.ASPX) FOR CURRENT SPECIFICATION.
2. UNLESS OTHERWISE NOTED THE CONTROLLER CABINET SHALL FACE THE STREET.

ELECTRICAL SERVICE PEDESTALS

1. IF CALLED FOR ON THE PLANS THE CONTRACTOR SHALL SUPPLY THE TRAFFIC SIGNAL ELECTRICAL SERVICE PEDESTAL. SEE "CITY OF MESA" WEB SITE (WWW.MESAAZ.GOV/TRANSPORTATION/TRAFFIC_SIGNALS_SPECIFICATIONS.ASPX) FOR APPROVED SUPPLIERS.

U.P.S (UN-INTERRUPTABLE POWER SUPPLY)

1. IF CALLED FOR ON THE PLANS THE CONTRACTOR SHALL SUPPLY THE TRAFFIC SIGNAL U.P.S. ASSEMBLY. SEE "CITY OF MESA" WEB SITE (WWW.MESAAZ.GOV/TRANSPORTATION/TRAFFIC_SIGNALS_SPECIFICATIONS.ASPX) FOR CURRENT SPECIFICATION.

BOLD BAR INDICATES A CHANGE TO THE NOTE TO THE RIGHT.

mesa·az

ITS/TRAFFIC SIGNAL GENERAL NOTES I

DETAIL NO. M-90.01

REV. 12/8/2014

VIDEO DETECTION SYSTEMS

1. IF CALLED FOR ON THE PLANS THE CONTRACTOR SHALL SUPPLY THE TRAFFIC SIGNAL VIDEO DETECTION SYSTEM. SEE "CITY OF MESA" WEB SITE (WWW.MESAAZ.GOV /TRANSPORTATION/TRAFFIC_SIGNALS_SPECIFICATIONS. ASPX) FOR CURRENT SPECIFICATION.

CLOSED CIRCUIT TELEVISION SYSTEMS

1. IF CALLED FOR ON THE PLANS THE CONTRACTOR SHALL SUPPLY THE CLOSED CIRCUIT TELEVISION SYSTEM. SEE "CITY OF MESA" WEB SITE (WWW.MESAAZ.GOV /TRANSPORTATION/TRAFFIC_SIGNALS_SPECIFICATIONS. ASPX) FOR CURRENT SPECIFICATION.

POLES

1. REFER TO COM DETAILS M-94.01, M-94.03, M-94.04, M-94.05, M-94.06 FOR CITY OF MESA POLES AND MAST ARMS (OTHER POLES AND MAST ARMS ARE PER ADOT SPECIFICATIONS EXCEPT AS NOTED).
2. ALL SUPPORTS SHALL BE DESIGNED TO MEET OR EXCEED AASHTO 1994, 80 MPH WIND LOAD REQUIREMENTS.
3. ALL POLES AND MAST ARMS SHALL BE GALVANIZED UNLESS OTHERWISE NOTED ON PLANS.
4. PUSH BUTTON POLES (BIKE AND PEDESTRIAN) SHALL BE 11 GAUGE STEEL AS SHOWN ON COM DETAIL M-94.01.

LUMINAIRES

1. ALL LUMINAIRES SHALL BE PER CITY OF MESA STANDARD DETAILS.
2. ALL LUMINAIRES ON SIGNAL POLES SHALL BE 120 VAC.

PAINTING

1. ALL METAL EXTERIOR SURFACES OF TRAFFIC SIGNALS, PEDESTRIAN SIGNALS, PUSH BUTTON STATIONS, AND FRAMEWORK SHALL BE PRE-TREATED AND ELECTROSTATIC POWDER COATED FLAT BLACK.

MOUNTING ASSEMBLIES FOR VEHICLUAR AND PEDESTRIAN INDICATIONS

1. ALL MOUNTING ASSEMBLIES SHALL BE BRONZE AND FULLY ASSEMBLIED.
2. REFER TO COM DETAIL M-95.01 FOR MOUNT PLACEMENT.
3. AS AN ADDENDUM TO ADOT TS 10-1, NO LOCK RINGS SHALL BE PERMITTED ON ANY PART OF THE MOUNT. LOWER ELBOWS SHALL HAVE 72 TEETH SERRATIONS 1/16" HIGH CAST INTO THE ELBOW SO AS TO BE A ONE PIECE UNIT.
4. THE UPPER ELBOW SHALL BE THREADED 1 1/2" NPT. THE SIGNAL HEAD SIDE SHALL HAVE A FLANGE OF AT LEAST 3/8" TO ENSURE THE HEAD, METAL WASHER, AND RUBBER GASKET ARE NOT DISTORTED WHEN SECURED.
5. ALL PIPE THREADS WHETHER INTERNAL OR EXTERNAL SHALL BE OF THE TAPERED TYPE.
6. ALL PIPE SHALL BE SCHEDULE 40 (0.145" WALL THICKNESS).

VEHICLE SIGNAL INDICATIONS

1. ALL INDICATIONS SHALL BE LIGHTING EMITTING DIODE (LED). SEE "CITY OF MESA" WEB SITE (WWW.MESAAZ.GOV/ TRANSPORTATION/TRAFFIC_SIGNALS_SPECIFICATIONS.APSX) FOR CURRENT SPECIFICATION.
2. TRAFFIC SIGNAL HEADS SHALL BE MADE OF POLYCARBONATE MATERIAL.
3. INDCIATION/VISOR DOORS SHALL BE EASILY REMOVED, WITHOUT HAVING TO DRIVE OUT RETAINING HINGE PINS.
4. TUNNEL VISORS SHALL BE 12" LONG FOR 12" HEADS. THEY SHALL BE MADE OF ALUMINUM. THEY SHALL BE ATTACHED TO THE SIGNAL HEAD BY SCREWS THROUGH 90 DEGREE RIGHT ANGLE MOUNTING TABS. (SEE ADOT TS 8-2 FOR DESIGN SPECIFICATIONS).
5. BACKPLATES WITH 5" BORDERS SHALL BE USED ON ALL 12 INCH HEADS. ALL BACKPLATES SHALL BE LOUVERED ALUMINUM. ALL BACKPLATES SHALL BE ONE PIECE ALUMINUM EXCEPT FOR TYPE "S" CLUSTER HEADS WHICH SHALL HAVE NO MORE THAN 3 SECTIONS TOTAL.
6. MAST ARM SIGNAL HEADS SHALL BE SUPPLIED WITH ADOT TYPE II MOUNTS. THE MOUNTS SHALL BE OF THE OFFSET "DOG LEG" TYPE. MOUNTS SHALL HAVE CAST IN SERRATIONS. SERRATED LOCKING RINGS WILL NOT BE PERMITTED. MOUNTS SHALL BE MADE OF BRONZE.
7. ALL BODY WASHERS ON HEADS SHALL BE AS SHOWN ON COM DETAIL M-95.02.
8. FOR CLUSTER HEADS REFER TO COM DETAIL M-95.03 FOR CITY OF MESA TYPE "S" HEAD (5 SECTION CLUSTER).
9. ALL SIGNAL HEAD ASSEMBLIES SHALL BE GUARANTEED BY THEIR MANUFACTURER FOR A MINIMUM OF FIVE (5) YEARS.
10. ALL HEADS ARE TO BE FULLY ASSEMBLED AND READY FOR INSTALLATION. VISORS MAY BE PACKAGED AND SHIPPED SEPARATELY.

| BOLD BAR INDICATES A CHANGE TO THE NOTE TO THE RIGHT.

mesa·az

ITS/TRAFFIC SIGNAL GENERAL NOTES II

DETAIL NO. M-90.02

REV. 12/1/2014

PEDESTRIAN INDICATIONS

1. ALL INDICATIONS SHALL BE LIGHT EMITTING DIODE (LED). INTERNATIONAL WALKING PERSON/HAND SYMBOL COUNTDOWN PEDESTRIAN SIGNALS SHALL BE FURNISHED AND INSTALLED PER COM SPECIFICATIONS. SEE "CITY OF MESA" WEB SITE (WWW.MESAAZ.GOV/TRANSPORTATION/TRAFFIC_SIGNALS_ SPECIFICATIONS.ASPX) FOR CURRENT SPECIFICATIONS.
2. PEDESTRIAN HEAD ASSEMBLIES SHALL BE GUARANTEED BY THEIR MANUFACTURER FOR A MINIMUM OF FIVE (5) YEARS.
3. ALL LEADS SHALL HAVE FULLY INSULATED TERMINALS.
4. PEDESTRIAN INDICATIONS SHALL HAVE Z-CRATE VISORS INSTALLED.

PUSH BUTTONS

1. ALL PUSH BUTTON STATIONS SHALL BE AS SHOWN ON COM DETAIL M-95.06.
2. FOR SIGNS REFER TO COM DETAIL M-99.01.
3. FOR MOUNTING REFER TO COM DETAIL M-95.01.
4. FOR BIKE PUSH BUTTON INSTALLATION REFER TO COM DETAIL M-94.02.
5. ALL PUSH BUTTON STATIONS SHALL BE GUARANTEED BY THEIR MANUFACTURER FOR A MINIMUM OF FIVE (5) YEARS.
6. MAXIMUM DISTANCE FROM PUSH BUTTON FACE TO EDGE OF ADA ACCESSIBLE APPROACH IS 10 INCHES.

INTERNALLY ILLUMINATED STREET NAME SIGNS

1. IF CALLED FOR ON THE PLANS THE CONTRACTOR SHALL SUPPLY THE TRAFFIC SIGNAL INTERNALLY ILLUMINATED STREET NAME SIGN(S). SEE "CITY OF MESA" WEB SITE (WWW.MESAAZ.GOV/TRANSPORTATION /_SIGNALS_SPECIFICATIONS.ASPX) FOR APPROVED SUPPLIERS.

BOLD BAR INDICATES A CHANGE TO THE NOTE TO THE RIGHT.

mesa·az

ITS/TRAFFIC SIGNAL GENERAL NOTES III

DETAIL NO.
M-90.03

REV. 02/18/2015

CONTRACTOR'S RESPONSIBILITY

1. ALL WORK IS TO BE ACCOMPLISHED IN ACCORDANCE WITH CITY OF MESA SPECIFICATIONS OR AS DIRECTED BY THE ENGINEER.

2. THE CITY OF MESA REQUIRES AT LEAST TWO INTERNATIONAL MUNICIPAL SIGNAL ASSOCIATION (IMSA) CERTIFIED TRAFFIC SIGNAL TECHNICIANS ON SITE DURING ALL PHASES OF ANY TRAFFIC SIGNAL WORK. ONE TECHNICIAN MUST AT LEAST BE A LEVEL II. IT WILL BE THE RESPONSIBILTY OF THE CONTRACTOR TO PROVIDE VERIFICATION OF CERTIFICATION. IF A JOB SITE IS INSPECTED AND A CERTIFIED TECHNICIAN IS NOT ON SITE, A STOP WORK ORDER WILL BE ISSUED. TEMPORARY AND CONTRACT EMPLOYEES DO NOT SATISFY THIS REQUIREMENT.

3. CONTRACTOR SHALL SUBMIT A LIST CONTAINING NAMES AND QUALIFIED STATUS OF PERSONNEL THAT WILL BE ON THE IMMEDIATE JOB SITE TO THE ENGINEER OR THEIR REPRESENTATIVE PRIOR TO STARTING ANY TYPE OF CONSTRUCTION. ANY CHANGE IN THIS LIST WILL REQUIRE IMMEDIATE NOTIFICATION TO THE ENGINEER OR THEIR REPRESENTATIVE.

4. THE CONTRACTOR SHALL IMMEDIATELY REPORT ANY TRAFFIC SIGNAL EQUIPMENT DAMAGE TO THE ENGINEERING INSPECTOR. DAMAGE TO ANY TRAFFIC SIGNAL EQUIPMENT SUCH AS CONTROLLER CABINET AND EQUIPMENT, DETECTION LOOPS, PULL BOXES, CONDUIT, POLES, MAST ARMS, HEADS OR RELATED EQUIPMENT AS A RESULT OF THE CONTRACTORS WORK IS THE RESPONSIBILITY OF THE CONTRACTOR AND SHALL BE REPAIRED OR REPLACED BY THE CONTRACTOR AT THEIR EXPENSE AS REQUIRED BY THE CITY. A CITY OF MESA TRAFFIC SIGNAL TECHNICIAN SHALL INSPECT THESE REPAIRS.

   A. A TRAFFIC SIGNAL CANNOT BE DARK OR IN FLASH FOR MORE THAN TWO HOURS.

   B. A LOSS OF COMMUNICATION SHALL BE REPAIRED WITHIN 24 HOURS.

   C. DETECTOR LOOPS SHALL BE REPLACED IN TWO WEEKS UNLESS OTHERWISE APPROVED BY THE ITS GROUP AND ENGINEER INSPECTOR, AGREE IN WRITING THAT THE WORK SCHEDULE REQUIRES ADJUSTMENT OF THIS TIME FRAME.

IF THE CONTRACTOR CANNOT RESPOND OR MAKE THE REPAIRS WITHIN THE ABOVE NOTED TIME FRAME THE CITY OF MESA TRAFFIC SIGNAL GROUP WILL MAKE THE NECESSARY REPAIRS AND CHARGE THE CONTRACTOR USING A "REPAIR ORDER FORM". THE AMOUNT OF EACH REPAIR SHALL BE EITHER $350.00 OR THE ACTUAL ACCUMLATED CHARGE FOR EMPLOYEES' TIME, MATERIALS AND EQUIPMENT, WHICHEVER IS GREATER. EMPLOYEES' TIME WILL BE BILLED AT EACH INDIVIDUAL'S HOURLY RATE PLUS THE APPLICABLE CITY OVERHEAD RATE. ANY MATERIALS USED WILL BE BILLED AT COST. EQUIPMENT RATES WILL BE BASED ON THE MOST RECENT SCHEDULE OF EQUIPMENT RENTAL RATES FOR FORCE ACCOUNT WORK, AS APPROVED BY THE ARIZONA DEPARTMENT TRANSPORTATION.

THE CONTRACTOR IS ADVISED THAT ANY COSTS RELATED TO REPAIR OR REPLACEMENT OF DAMAGED TRAFFIC SIGNAL EQUIPMENT AS A RESULT OF THE CONTRACTOR'S WORK SHALL BE BORNE BY THE CONTRACTOR.

IF THERE IS A TRAFFIC SIGNAL PROBLEM (I.E. INDICATION OUTAGE, KNOCKDOWNS, UTILITY POWER OUTAGES, ETC) AND IS NOT A DIRECT RESULT OF THE CONTRACTOR OR SUB-CONTRACTOR'S WORK. A TRAFFIC SIGNAL TECHNICIAN SHALL BE CALLED TO RESPOND. IF IT IS DETERMINED THE CONTRACTOR OR SUB-CONTRACTOR'S WORK CAUSED THE TRAFFIC SIGNAL MALFUNCTION, THE CONTRACTOR THROUGH A "REPAIR ORDER FORM" SHALL PAY ALL THE COSTS OF REPAIRS.

IF THE TRAFFIC SIGNAL FIBER OPTIC CABLE IS DAMAGED AS A RESULT OF A PROJECT. THE TRAFFIC SIGNAL FIBER OPTIC CABLE SHALL BE REPLACED IN THE INCREMENT FOR WHICH IT WAS ORIGINALLY INSTALLED AS DIRECTED BY THE ITS ENGINEER. NO NEW SPLICE POINTS WILL BE INTRODUCED INTO THE SYSTEM.

WARRANTY

1. CONTRACTOR SHALL WARRANTY WORKMANSHIP FOR A PERIOD OF 12 MONTHS FROM DATE OF ACCEPTANCE.

2. EQUIPMENT WARRANTIES WILL BE GIVEN TO THE CITY OF MESA TRAFFIC SIGNALS WORKGROUP AT THE TIME OF ACCEPTANCE OF THE PROJECT.

WORK PROCEDURES

1. CONTRACTOR SHALL WORK WITH THE ASSIGNED TRAFFIC SIGNAL TECHNICIAN FOR INSPECTIONS, MATERIAL, AND OTHER JOB RELATED PROBLEMS.

2. CONTRACTOR INSPECTION AND MATERIAL REQUESTS SHALL BE SUBMITTED 24 HOURS PRIOR TO THE INSPECTION OR MATERIAL PICK-UP.

3. INSPECTIONS INCLUDE BUT ARE NOT LIMITED TO THE FOLLOWING:

   A.) BEFORE STARTING PROJECT.

   B.) BEFORE BACKFILLING TRENCHES AND BORE PITS AND BEFORE COVERING CONDUIT.

   C.) BEFORE FILLING PULL BOX HOLES WITH AGGREGATE.

   D.) BEFORE PULLING TRAFFIC SIGNAL AND OR FIBER OPTIC CABLE.

   E.) WHEN POLE FOUNDATIONS ARE READY TO BE POURED WITH CONCRETE.

   F.) WHILE POURING FOUNDATIONS.

   G.) WHEN PROJECT IS COMPLETED (PROJECT IS COMPLETE WHEN FINAL INSPECTION IS APPROVED AND BILL HAS BEEN SUBMITTED).

4. ALL TRAFFIC SIGNAL HEAD ASSEMBLIES SHALL BE INSPECTED PRIOR TO THE INSTALLATION BY THE CONTRACTOR.

mesa·az

TRAFFIC SIGNAL CONSTRUCTION PROCEDURES I

DETAIL NO.
M-90.04

REV. 12/8/2014

WORKSITE SAFETY

1. IT SHALL BE THE RESPONSIBILITY OF THE CONTRACTOR TO COMPLY WITH THE CITY OF MESA TRAFFIC BARRICADE MANUAL FOR ANY WORK INSIDE THE CITY LIMITS AND ACQUIRE ANY TEMPORARY TRAFFIC CONTROL PERMITS REQUIRED FOR THE PROJECT.

2. CONTRACTOR SHALL PROVIDE APPROVED WORKSITE BARRICADING AND OTHER SAFETY MEASURES AS NECESSARY TO PROTECT THE PUBLIC FROM TRENCHES AND OTHER WORK SITE HAZARDS DURING WORKING AND NON-WORKING HOURS.

3. CONTRACTOR SHALL BARRICADE ALL CONCRETE FOUNDATIONS WITH A TYPE I OR TYPE II LIGHTED BARRICADE UNTIL POLE IS SET.

4. CONTRACTOR SHALL NOT LEAVE ANY CONSTRUCTION MATERIAL IN THE ROADWAY, ON THE SIDEWALK, OR AT ANY OTHER LOCATION THAT MAY IMPEDE SAFE VEHICLE AND PEDESTRIAN MOVEMENT.

5. CONTRACTOR SHALL LEAVE A SECURE AND SAFE CONSTRUCTION SITE WHEN FINISHED WITH WORK FOR THE DAY. A SAFE CONSTRUCTION SITE IS THE CONTRACTOR'S RESPONSIBILITY.

6. EMPLOYEES OF THE CONTRACTOR SHALL USE REASONABLE SAFETY PROCEDURES WHILE WORKING. REASONABLE SAFETY PROCEDURES SHALL INCLUDE, BUT NOT BE LIMITED TO THE USE OF, SAFETY HATS, GLOVES, GOGGLES, REFLECTIVE VESTS, AND A SAFETY HARNESS WHEN WORKING IN A BUCKET TRUCK.

mesa·az

TRAFFIC SIGNAL CONSTRUCTION PROCEDURES II

DETAIL NO.
M-90.05

REV. 01/31/2014

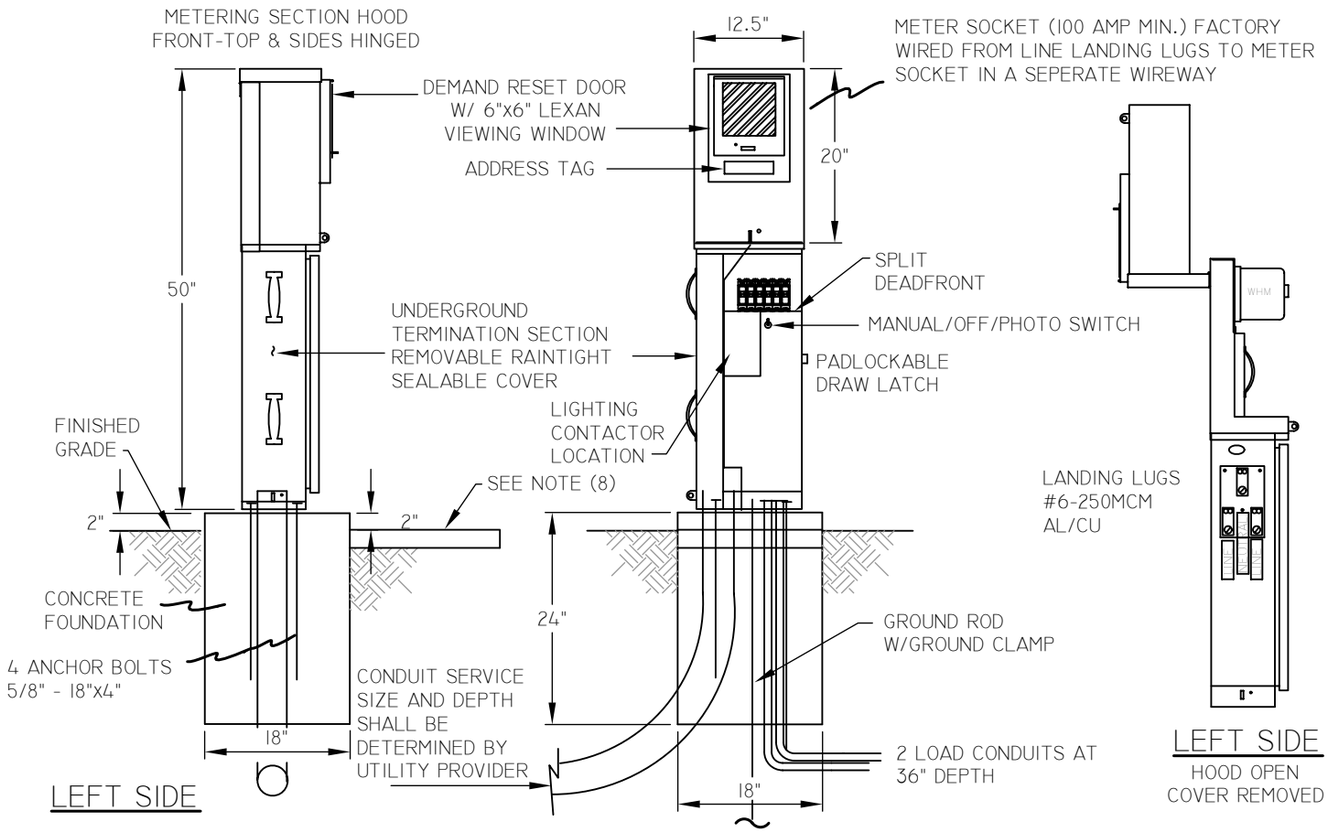

LEFT SIDE

HOOD OPEN
COVER REMOVED

GENERAL NOTES

1. ALL MATERIALS AND CONSTRUCTION SHALL CONFORM TO THE REQUIREMENTS OF THE SPECIFICATIONS.
2. SEE PLANS FOR CONDUIT SIZE, LOCATION, AND QUANTITY.
3. UNSTABLE SOIL MAY REQUIRE A DEEPER FOUNDATION: SEE ADOT SPECIFICATIONS.
4. ANCHOR BOLTS SHALL BE GALVANIZED STEEL, 5/8" x 18" x 4", COMPLETE WITH NUTS AND WASHERS.
5. ANCHOR BOLTS SHALL PROJECT A MINIMUM OF 1" AND A MAXIMUM OF 1 1/2" ABOVE FOUNDATION.
6. CONDUIT SHALL PROJECT A MINIMUM OF 2" AND A MAXIMUM OF 4" ABOVE THE FOUNDATION, EXCEPT FOR CONDUIT FOR GROUND ROD, WHICH SHALL BE FLUSH.
7. USE SILICONE CAULK TO SEAL GAP BETWEEN CABINET AND FOUNDATION.
8. A RAISED PCC PAD 18" x 4 x 24" SHALL BE PLACED IN FRONT OF CABINET. PAD SHALL BE SET 2" BELOW THE FOUNDATION ELEVATION. SLOPE PAD AWAY FROM CABINET.
9. ALL CABINET FOUNDATIONS SHALL HAVE A 5/8 INCH x 10 FOOT BONDED GROUND ROD. GROUND ROD SHALL BE INSTALLED BEFORE FOUNDATION IS POURED.
10. DEAD FRONT SHALL BE SPLIT TO ALLOW ACCESS TO LINE AND LOAD SIDE OF BREAKERS INDIVIDUALLY.
11. LIGHTING CONTACTOR SHALL BE INSTALLED IN ALL PEDESTALS PER WIRING SCHEMATIC.

ENCLOSURE CONSTRUCTION NOTES

1. FABRICATED FROM .125 ALUM AND INTERIOR 14 GA. COLD ROLLED STEEL ELECTRICALLY WELDED AND REINFORCED WHERE REQUIRED.
2. CONSTRUCTION WILL BE NEMA 3R RAINTIGHT.
3. ALL NUTS, BOLTS, SCREWS AND HINGES WILL BE STAINLESS STEEL.
4. NUTS, BOLTS & SCREWS WILL NOT BE VISIBLE FROM OUTSIDE OF ENCLOSURE.
5. PHENOLIC NAMEPLATES WILL BE PROVIDED AS REQUIRED.
6. CONTROL WIRING WILL BE MARKED AT BOTH ENDS BY PERMANENT WIRE MARKERS.
7. A PLASTIC COVERED WIRING DIAGRAM WILL BE ATTACHED TO THE INSIDE OF THE FRONT DOOR.
8. ENCLOSURE WILL BE FACTORY WIRED AND CONFORM TO REQUIRED NEMA STANDARDS.
9. RAW ALUM

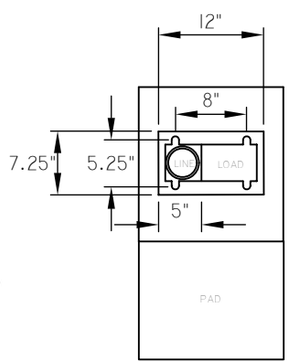

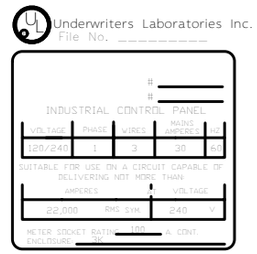

BASE PLAN

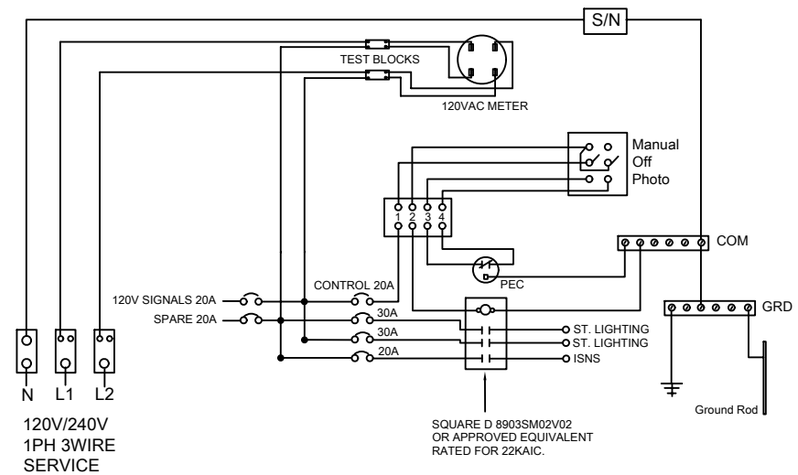

WIRING SCHEMATIC

DIMENSIONS ARE - #.##" INCHES, (###) MILLIMETER

NOT TO SCALE

mesa·az

TRAFFIC SIGNAL FULLY METERED SERVICE PEDESTAL

DETAIL NO.
M-91.01

REV. 01/31/2014

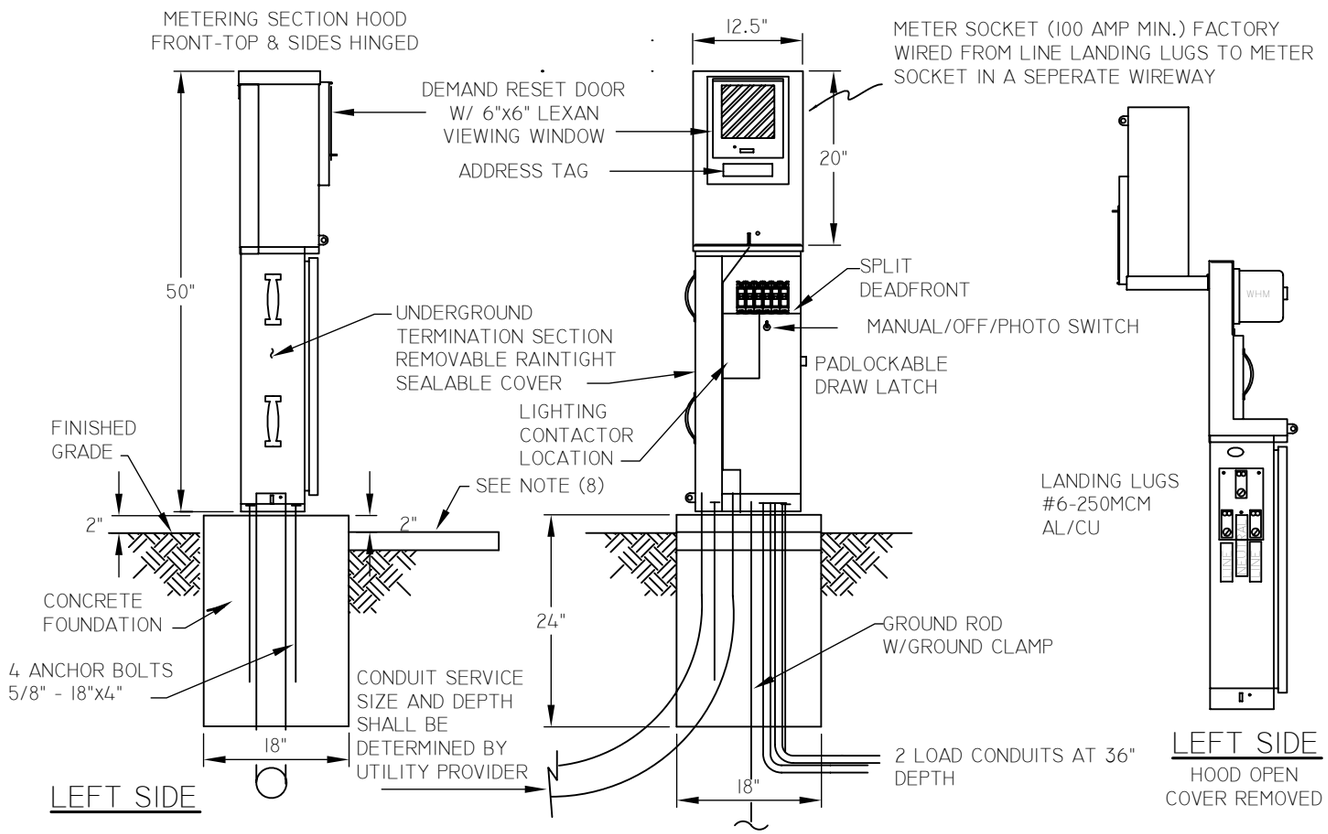

GENERAL NOTES

1. ALL MATERIALS AND CONSTRUCTION SHALL CONFORM TO THE REQUIREMENTS OF THE SPECIFICATIONS.
2. SEE PLANS FOR CONDUIT SIZE, LOCATION, AND QUANTITY.
3. UNSTABLE SOIL MAY REQUIRE A DEEPER FOUNDATION: SEE ADOT SPECIFICATIONS.
4. ANCHOR BOLTS SHALL BE GALVANIZED STEEL, 5/8" x 18" x 4", COMPLETE WITH NUTS AND WASHERS.
5. ANCHOR BOLTS SHALL PROJECT A MINIMUM OF 1" AND A MAXIMUM OF 1 1/2" ABOVE FOUNDATION.
6. CONDUIT SHALL PROJECT A MINIMUM OF 2" AND A MAXIMUM OF 4" ABOVE THE FOUNDATION, EXCEPT FOR CONDUIT FOR GROUND ROD, WHICH SHALL BE FLUSH.
7. USE SILICONE CAULK TO SEAL GAP BETWEEN CABINET AND FOUNDATION.
8. A RAISED PCC PAD 18" x 4 x 24" SHALL BE PLACED IN FRONT OF CABINET. PAD SHALL BE SET 2" BELOW THE FOUNDATION ELEVATION. SLOPE PAD AWAY FROM CABINET.
9. ALL CABINET FOUNDATIONS SHALL HAVE A 5/8 INCH x 10 FOOT BONDED GROUND ROD. GROUND ROD SHALL BE INSTALLED BEFORE FOUNDATION IS POURED.
10. DEAD FRONT SHALL BE SPLIT TO ALLOW ACCESS TO LINE AND LOAD SIDE OF BREAKERS INDIVIDUALLY.
11. LIGHTING CONTACTOR SHALL BE INSTALLED IN ALL PEDESTALS PER WIRING SCHEMATIC.

ENCLOSURE CONSTRUCTION NOTES

1. FABRICATED FROM .125 ALUM AND INTERIOR 14 GA. COLD ROLLED STEEL ELECTRICALLY WELDED AND REINFORCED WHERE REQUIRED.
2. CONSTRUCTION WILL BE NEMA 3R RAINTIGHT.
3. ALL NUTS, BOLTS, SCREWS AND HINGES WILL BE STAINLESS STEEL.
4. NUTS, BOLTS & SCREWS WILL NOT BE VISIBLE FROM OUTSIDE OF ENCLOSURE.
5. PHENOLIC NAMEPLATES WILL BE PROVIDED AS REQUIRED.
6. CONTROL WIRING WILL BE MARKED AT BOTH ENDS BY PERMANENT WIRE MARKERS.
7. A PLASTIC COVERED WIRING DIAGRAM WILL BE ATTACHED TO THE INSIDE OF THE FRONT DOOR.
8. ENCLOSURE WILL BE FACTORY WIRED AND CONFORM TO REQUIRED NEMA STANDARDS.
9. RAW ALUM

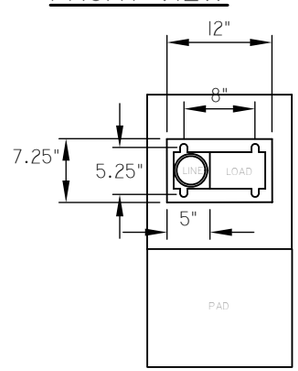

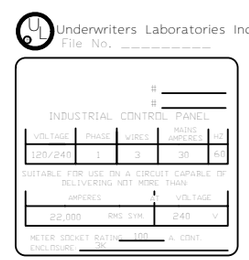

BASE PLAN

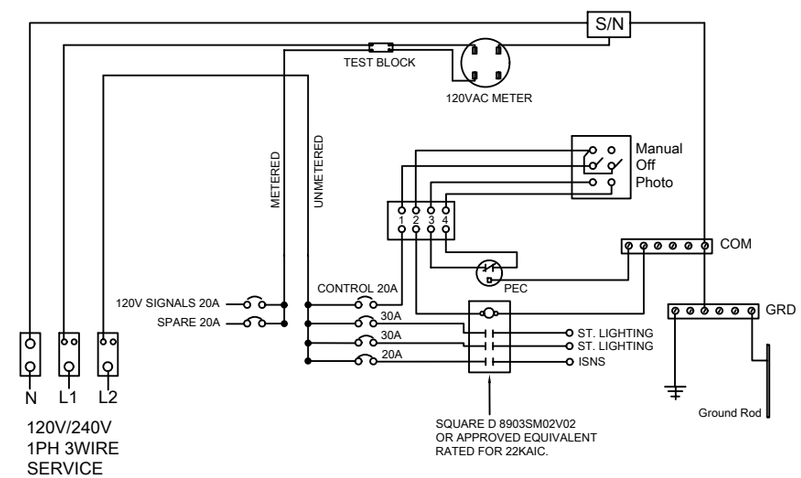

WIRING SCHEMATIC

DIMENSIONS ARE - #.##" INCHES, (###) MILLIMETER

NOT TO SCALE

mesa·az

TRAFFIC SIGNAL SPLIT SERVICE PEDESTAL

DETAIL NO. M-91.02

REV. 01/31/2014

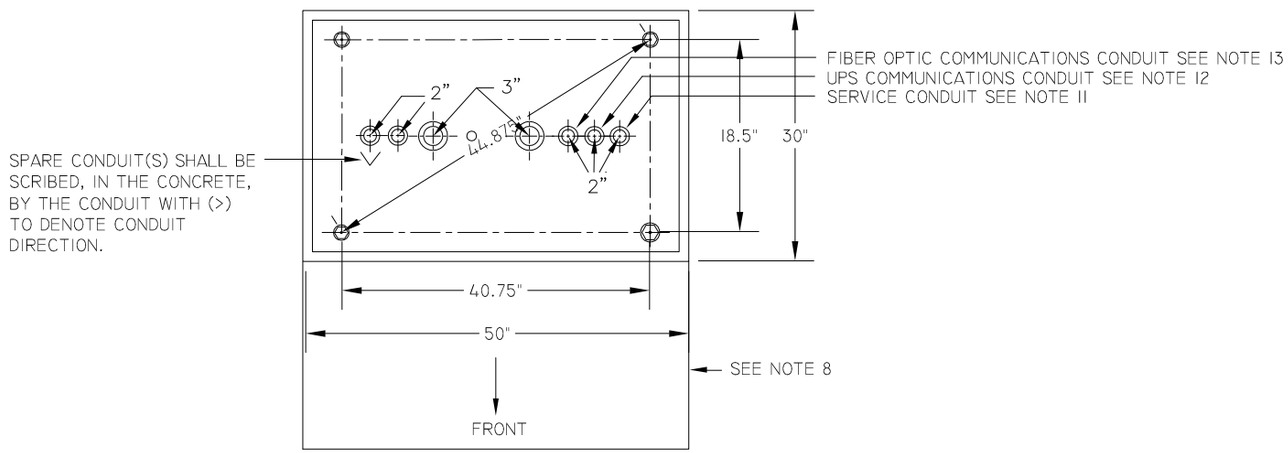

GENERAL NOTES

1. ALL MATERIALS AND CONSTRUCTION SHALL CONFORM TO THE REQUIREMENTS OF THE SPECIFICATIONS.
2. SEE PLANS FOR CONDUIT SIZE, LOCATION, AND QUANTITY.
3. UNSTABLE SOIL MAY REQUIRE A DEEPER FOUNDATION: SEE ADOT SPECIFICATIONS.
4. ANCHOR BOLTS SHALL BE GALVANIZED STEEL, 3/4" x 11" x 5", COMPLETE WITH NUTS AND WASHERS.
5. ANCHOR BOLTS SHALL PROJECT A MINIMUM OF 1" AND A MAXIMUM OF 1 1/2" ABOVE FOUNDATION.
6. CONDUIT SHALL PROJECT A MINIMUM OF 2" AND A MAXIMUM OF 4" ABOVE THE FOUNDATION, EXCEPT FOR CONDUIT FOR GROUND ROD, WHICH SHALL BE FLUSH WITH SURFACE.
7. USE SILICONE CAULK TO SEAL GAP BETWEEN CABINET AND FOUNDATION.
8. IN UNPAVED AREAS A RAISED PCC PAD 36" x 4 x 50" SHALL BE PLACED IN FRONT OF CABINET. PAD SHALL BE SET 2" BELOW THE FOUNDATION ELEVATION AND BE 4" THICK. SLOPE PAD AWAY FROM CABINET.
9. ALL CABINET FOUNDATIONS SHALL HAVE A 5/8 INCH x 10 FOOT BONDED GROUND ROD. GROUND ROD SHALL BE INSTALLED BEFORE FOUNDATION IS POURED.
10. 2 - 2" SPARE PVC CONDUITS SHALL BE INSTALLED IN THE FOUNDATIONS. STUB OUT A MINIMUM OF 3' AND CAP THE ENDS. TRAFFIC SIGNAL INSPECTOR SHALL DETERMINE ORIENTATION OF SPARE CONDUITS.
11. 2" CONDUIT IS DESIGNATED FOR ELECTRICAL SERVICE.
12. 2" CONDUIT IS DESIGNATED FOR UPS COMMUNICATIONS/ CONTROL CABLE.
13. 2" CONDUIT IS DESIGNATED FOR FIBER OPTIC COMMUNICATIONS CABLE.

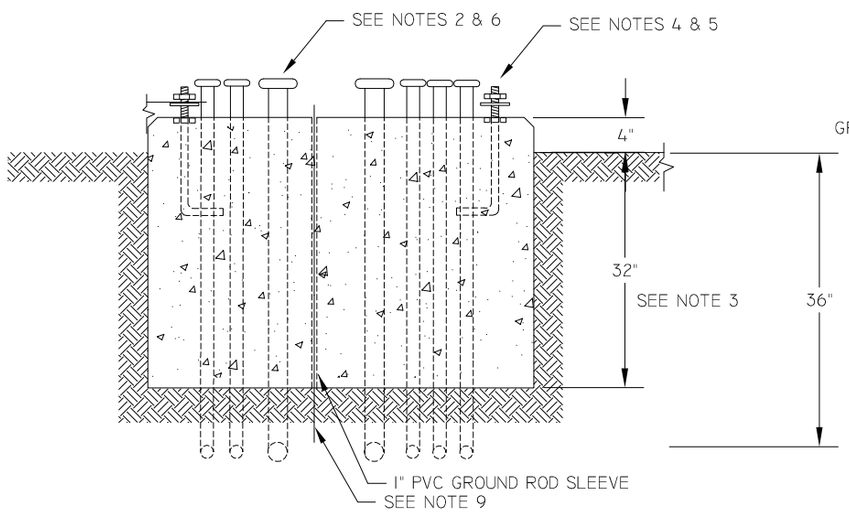

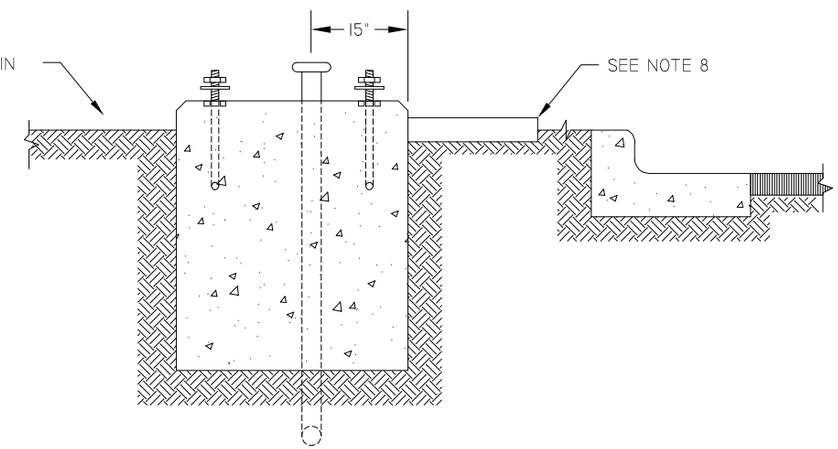

TRAFFIC SIGNAL CABINET FOUNDATION

DETAIL NO.
M-92.01

REV. 12/1/2014

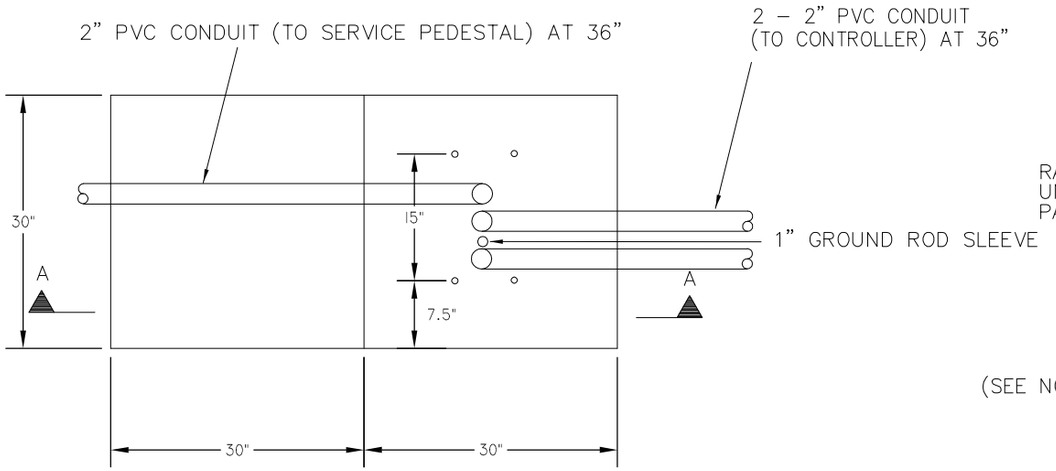

PLAN

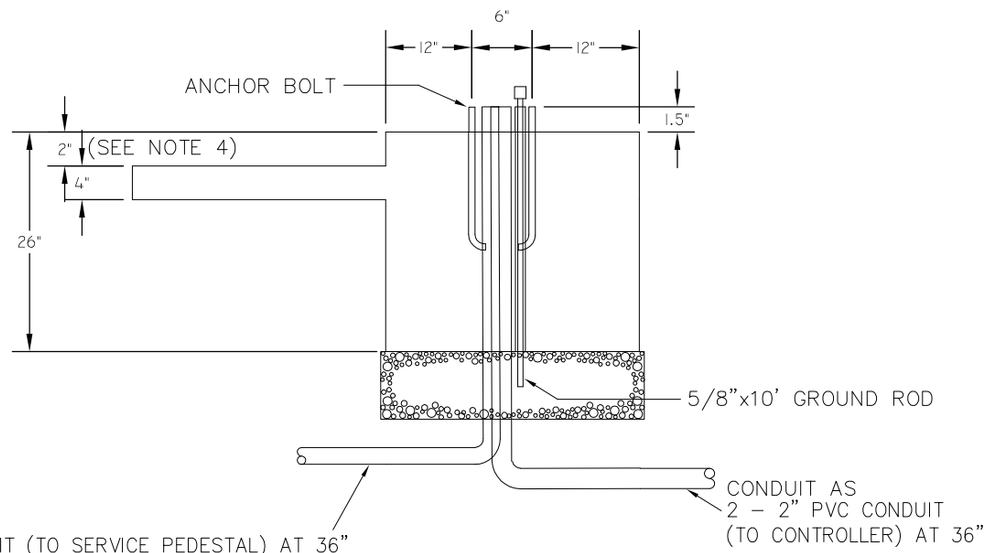

ELEVATION A–A

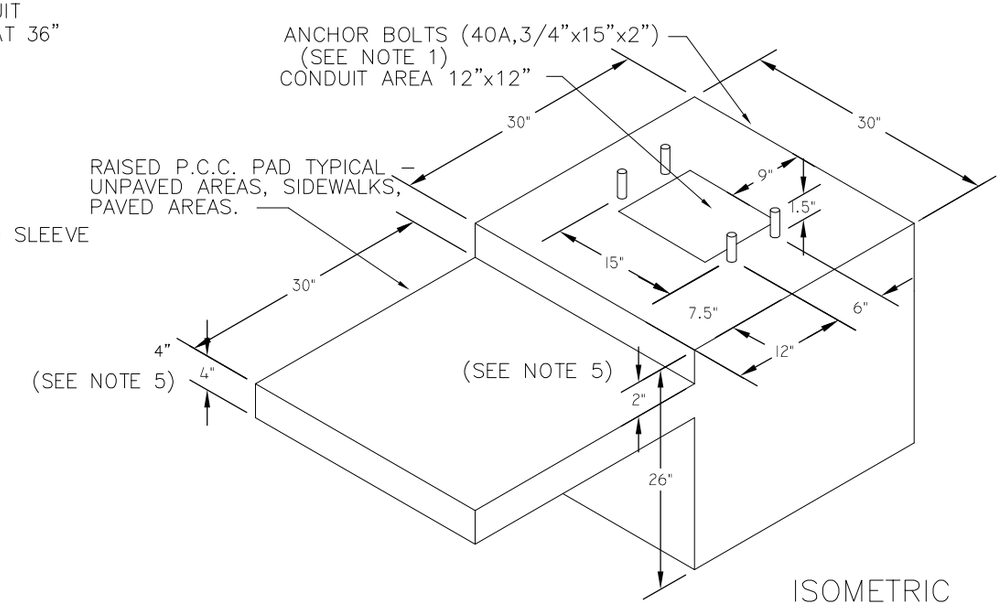

ISOMETRIC

GENERAL NOTES

1. ALL CONDUITS AND ANCHOR BOLTS SHALL BE RIGIDLY INSTALLED BEFORE CONCRETE IS PLACED.
2. TOP OF PAD TO BE SLOPED TO DRAIN.
3. A CLEAR SILICONE SEALANT SHALL BE APPLIED ALONG THE OUTSIDE EDGES OF THE CABINET WHERE IT ABUTTS TO THE CONCRETE PAD.
4. 4" IS NOMINAL DIMENSION. 2"x4" FORMS ARE ACCEPTABLE EXCEPT WHERE OTHERWISE NOTED OR DIRECTED (EXPOSED CONCRETE SURFACES SHALL BE FORMED BY OTHER MEANS FOR AN ACCEPTABLE FINISHED APPEARANCE).

NOT TO SCALE

mesa·az

TRAFFIC SIGNAL U.P.S. FOUNDATION

DETAIL NO.
M-92.02

REV. 02/04/2013

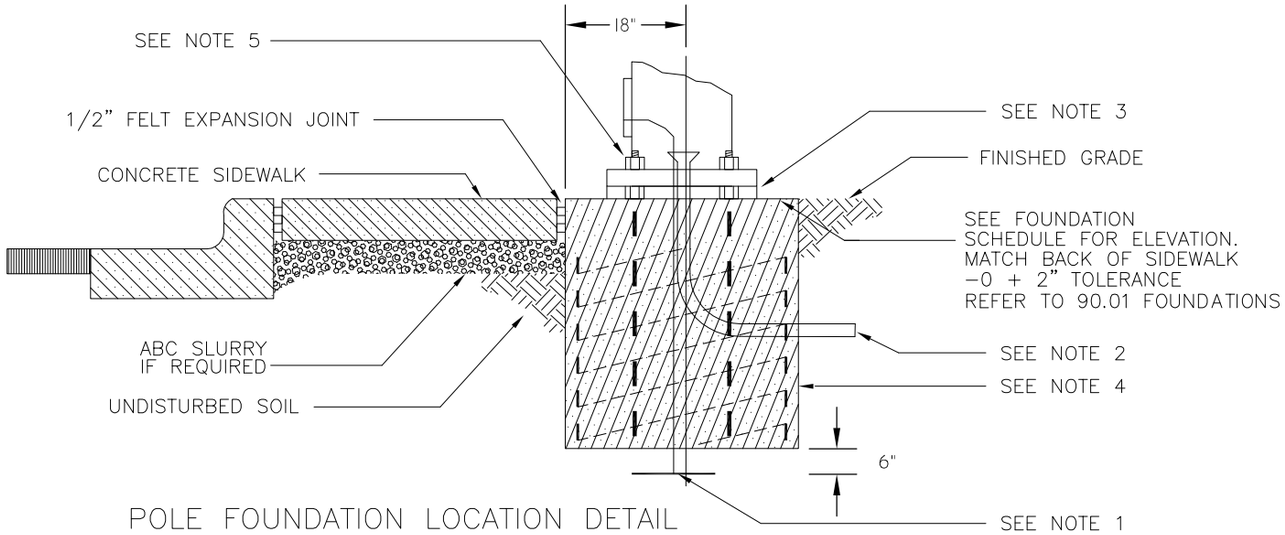

POLE FOUNDATION LOCATION DETAIL

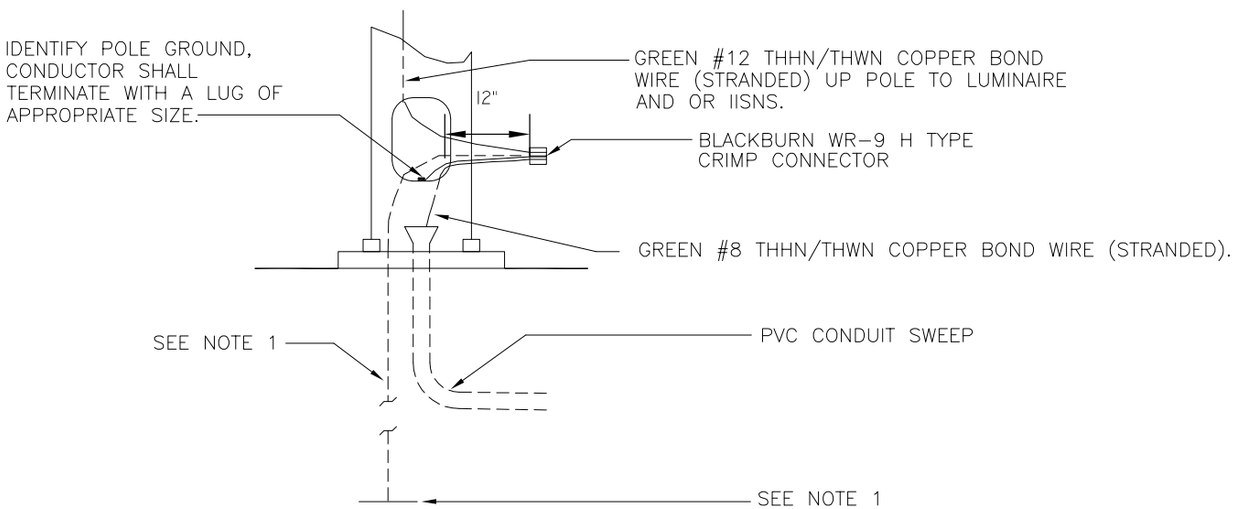

POLE GROUNDING DETAIL

GENERAL NOTES

1. A #8 XHHW INSULATED COPPER STRANDED BOND WIRE WITH A 14" COPPER GROUNDING PLATE (SEE M-73.6 FOR PLATE DETAIL) OR A 25' COIL OF #4 COPPER BARE BOND (SOLID OR STRANDED) COVERED WITH 6" FILL DIRT.
2. SCHEDULE 40 PVC 90 DEGREE CONDUIT BEND (SEE POLE DETAILS FOR CONDUIT SIZE) WITH A RADIUS OF NOT LESS THAN 18" (FACTORY BENDS ONLY). CONDUIT SHALL PROJECT MINIMUM OF 2" AND A MAXIMUM OF 4" ABOVE THE FOUNDATION AT 36" DEPTH.
3. THE LEVELING NUTS SHALL BE INSTALLED ON TOP OF CONCRETE POLE BASE. SPACE BETWEEN CONCRETE POLE BASE AND POLE BASE AROUND LEVELING NUTS SHALL BE GROUTED WITH A WEEP HOLE. THE WEEP HOLE SHALL BE CONSTRUCTED OF 1/2" COTTON ROPE AND BE ORIENTED ON THE OPPOSITE SIDE OF THE POLE FROM THE STREET. SEE ADOT SPECIFICATIONS FOR GROUT.
4. CONCRETE FOUNDATIONS SHALL BE VIBRATED WITH A MECHANICAL VIBRATOR DURING CONCRETE POUR.
5. FOR J, K, Q, AND R POLES, THE ANCHOR BOLTS SHALL PROJECT 8 INCHES ABOVE THE FOUNDATION. ANCHOR BOLTS SHALL HAVE A MINIMUM 2 FULL THREAD ABOVE NUTS ON ALL POLES.

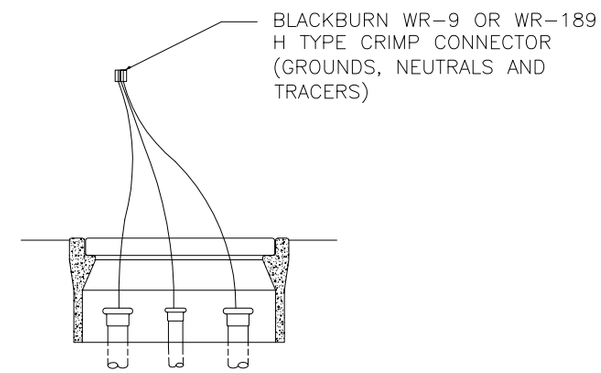

PULL BOX GROUNDING DETAIL

NOT TO SCALE

mesa·az

POLE, PULLBOX & FOUNDATION GROUNDING

DETAIL NO.
M-92.03

REV. 12/1/2014

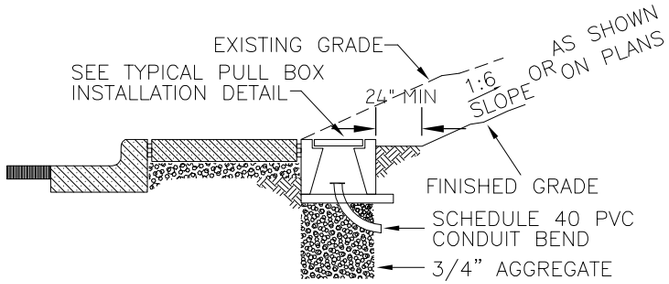

UPWARD SLOPE DETAIL

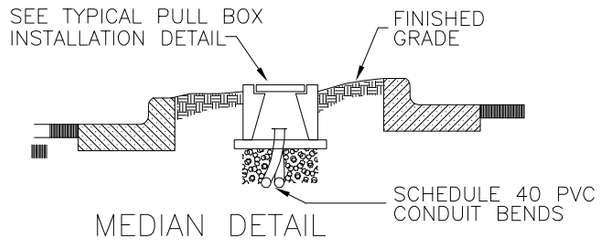

MEDIAN DETAIL

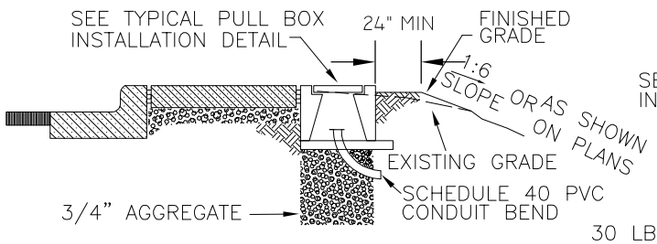

DOWNWARD SLOPE DETAIL

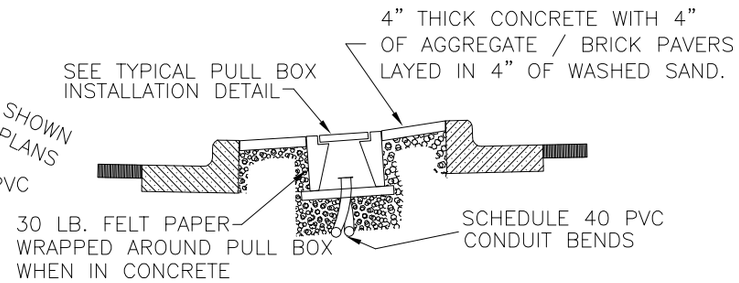

CONCRETE MEDIAN DETAIL

GENERAL NOTES

1. ALL FINISHED TRAFFIC SIGNAL EQUIPMENT (POLE FOUNDATIONS, PULL BOXES, AND CONTROLLER CABINET PADS) SHALL BE AT BACK OF SIDEWALK GRADE, UNLESS OTHERWISE NOTED ON PLANS.
2. WHEN TRAFFIC SIGNAL EQUIPMENT (POLES, PULL BOXES, AND CONTROLLER CABINETS) ARE INSTALLED IN A UPWARD SLOPE SECTION, THE PROJECT ENGINEER SHALL DESIGN A RETAINING WALL OR CUT BACK EXISTING GRADE TO OBTAIN A LEVEL AREA FOR AT LEAST 24 INCHES FROM THE TRAFFIC SIGNAL EQUIPMENT. THE SLOPE OF THE FINISHED GRADE SHALL NOT EXCEED A 1:6 SLOPE AND SHALL MATCH AND CONFORM TO EXISTING TERRAIN.
3. WHEN TRAFFIC SIGNAL EQUIPMENT (POLES, PULL BOXES, AND CABINETS) ARE INSTALLED IN A DOWNWARD SLOPE SECTION, NEEDED DIRT SHALL BE HAULED IN TO OBTAIN A LEVEL AREA FOR AT LEAST 24 INCHES FROM THE TRAFFIC SIGNAL EQUIPMENT THE SLOPE OF THE FINISHED GRADE SHALL NOT EXCEED A 1:6 SLOPE AND SHALL MATCH AND CONFORM TO THE EXISTING TERRAIN.
4. CONDUIT END BELLS SHALL BE INSTALLED BEFORE PULLING WIRE.
5. BACKFILL WITH EXCAVATED MATERIALS AND THOROUGHLY TAMP PER M.A.G. STANDARD 601.
6. FINISH GRADE SHALL BE 1" DOWN FROM TOP OF BOX. ANY PAVEMENT OR SIDEWALK SHALL BE FLUSH WITH TOP OF BOX.
7. FOR GROUNDING REQUIREMENTS REFER TO M-92.03.

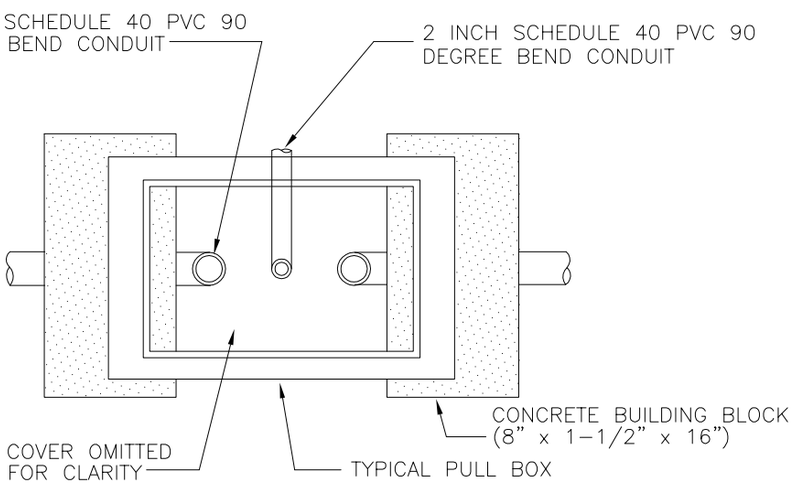

TOP VIEW

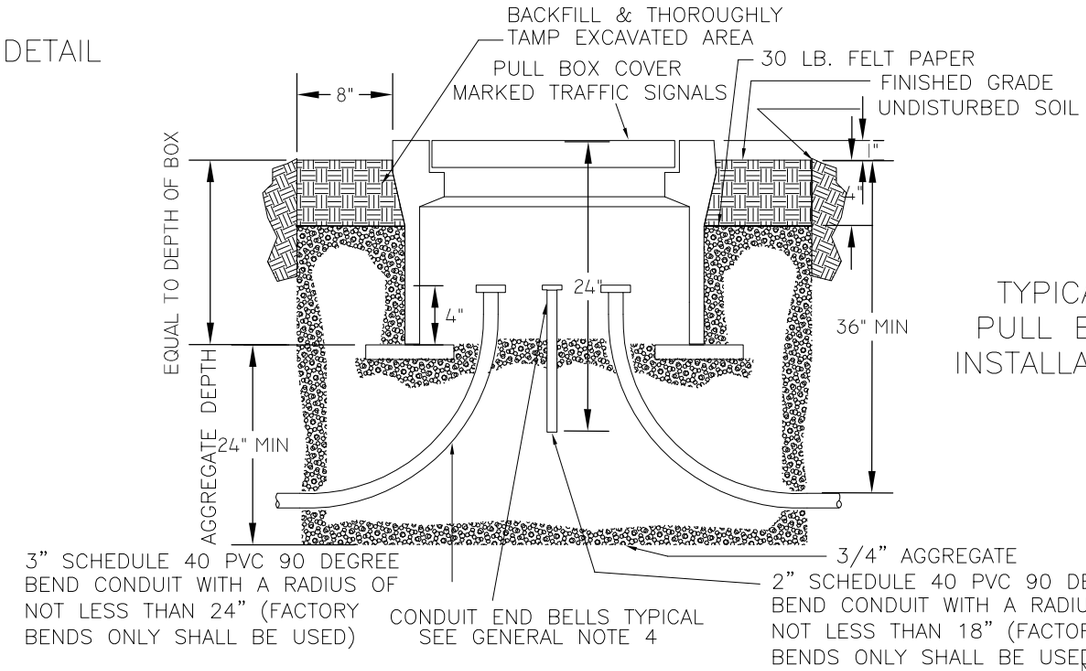

TYPICAL PULL BOX INSTALLATION

NOT TO SCALE

mesa·az

TRAFFIC SIGNAL PULL BOX INSTALLATION

DETAIL NO. M-93.01

REV. 12/1/2014

FOR ALL ITS/ TRAFFIC SIGNAL FIBER OPTIC INSTALLATIONS DETAILS REFER TO M-66.01 TO M-66.11

TRAFFIC SIGNAL FIBER-OPTIC INSTALLATION

M-93.02

REV. 12/03/2012

FOR ALL ITS/ TRAFFIC SIGNAL FIBER OPTIC INSTALLATIONS DETAILS REFER TO M-66.01 TO M-66.11

FIBER-OPTIC TRUNK-LINE CONDUIT INSTALLATION DETAILS

M-93.03

REV. 12/05/2012

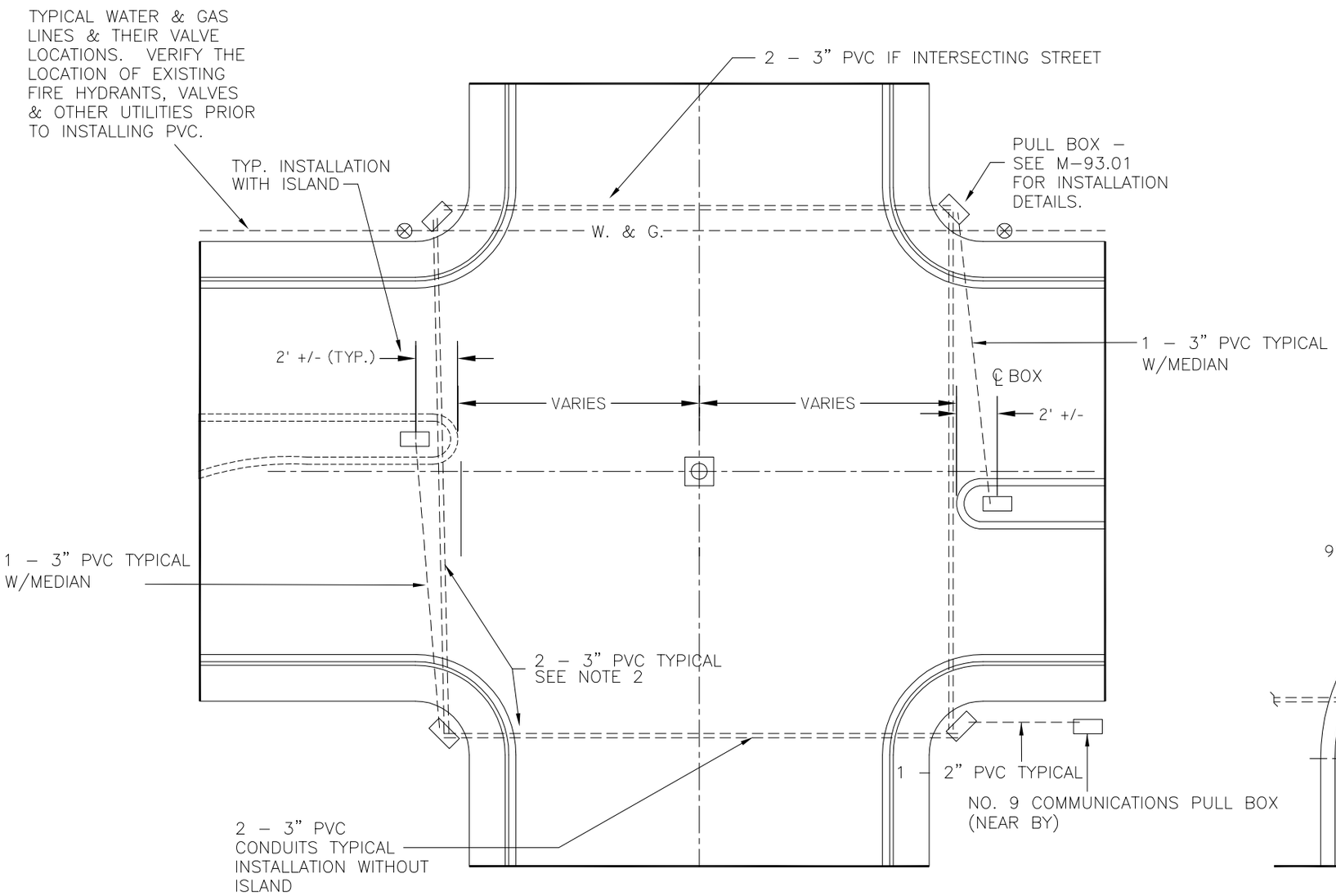

GENERAL NOTES

1. INSTALL GREEN #8 THHN/THWN STRANDED COPPER WIRE FULL LENGTH INSIDE OF CONDUIT WITH THREE FEET (3') EXTENDING ABOVE CONDUIT. ALL BARE BONDS SHALL BE SPLICED TOGETHER FOR FUTURE LOCATING
2. PURPOSES.
3. PVC SCHEDULE 40 ELECTRICAL CONDUIT SHALL BE USED FOR OPEN TRENCH ONLY. HDPE SDR–11 SHALL BE USED FOR GUIDED BORE APPLICATIONS ONLY AND MAY BE USED FOR OPEN TRENCH.
4. DEPTH OF PVC INSTALLATION SHALL BE 36" MINIMUM (TYPICAL) BELOW LIP OF GUTTER AND RUN IN A HORIZONTAL PLANE FROM PULL BOX TO PULL BOX.
5. IF A NUMBER 9 PULLBOX EXISTS NEAR BY A NUMBER 7 PULLBOX FOR A FUTURE SIGNALS, CONNECT THE TWO PULLBOXES WITH A 2" CONDUIT.

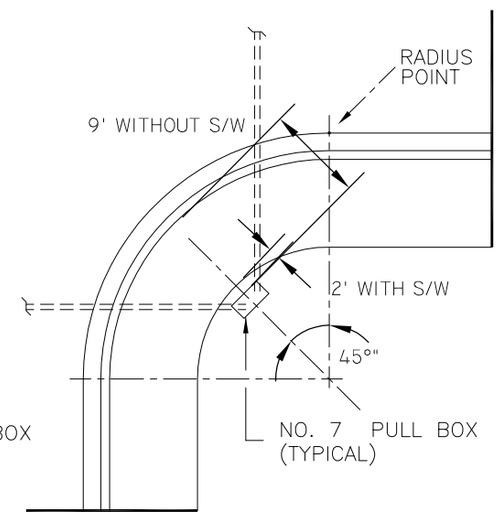

NOT TO SCALE

mesa·az

CONDUIT LAYOUT FOR FUTURE TRAFFIC SIGNALS

DETAIL NO. M-93.04

REV. 12/19/2012

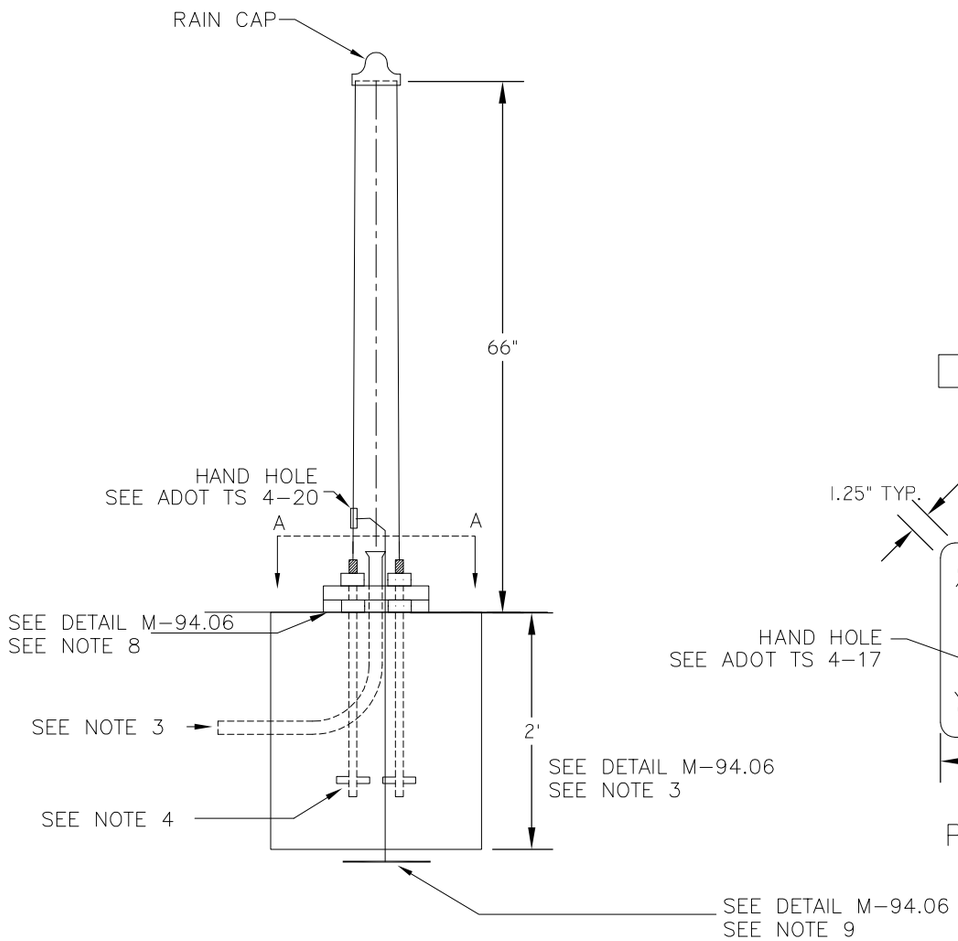

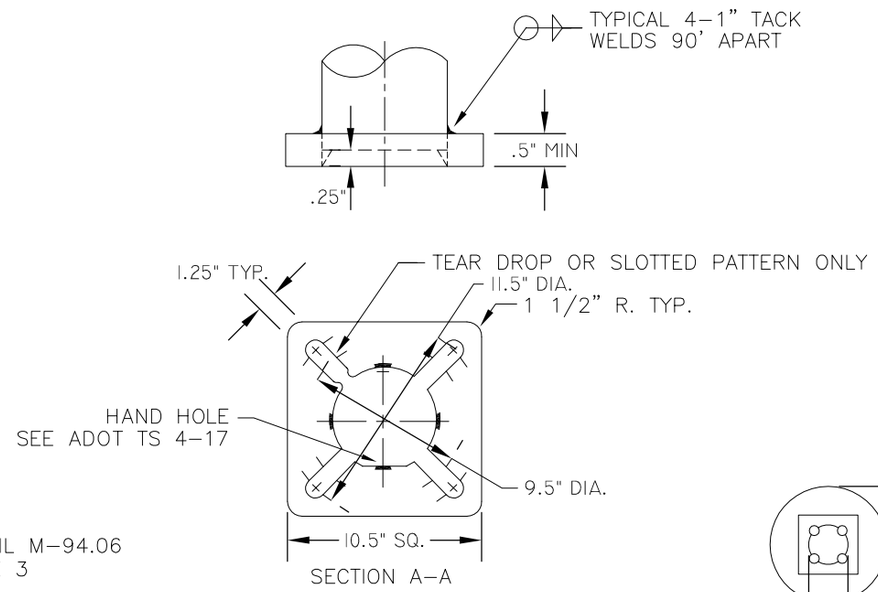

POLE BASE

BIKE/PEDESTRIAN POLE GENERAL NOTES

1. ALL DIMENSIONS ARE IN ENGLISH UNITS.
2. ALL BIKE/PEDESTRIAN POLES MAY BE OF THE STRAIGHT OR TAPERED TYPE, WALL THICKNESS SHALL NOT EXCEED .125". POLE O.D. SHALL BE 4.00".
3. INSTALL A SINGLE 2" PVC CONDUIT IN FOUNDATION AT 36" DEPTH.
4. ANCHOR BOLTS SHALL BE 1" X 12", EACH ANCHOR BOLT SHALL HAVE FOUR HEX NUTS AND TWO FLAT WASHERS.
5. ANCHOR BOLTS SHALL PROJECT 3 1/2" ABOVE THE FINISHED SIDEWALK.
6. A STAINLESS STEEL TAG SHALL BE PERMANENTLY ATTACHED TO THE POLE 4" ABOVE THE POLE BASE STATING THE MANUFACTURER'S NAME, C.O.M. POLE TYPE AND DATE MANUFACTURED.

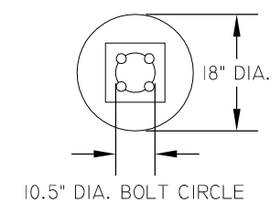

FOUNDATION PLAN

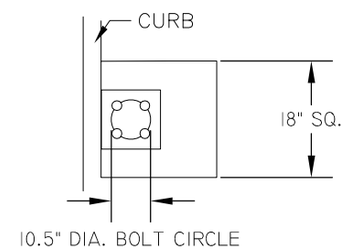

OPTIONAL OFFSET FOUNDATION PLAN

NOT TO SCALE

mesa·az

BICYCLE / PEDESTRIAN POLE

DETAIL NO. M-94.01

REV. 01/31/2014

FIGURE A
INSTALLATION NEAR ANOTHER POLE

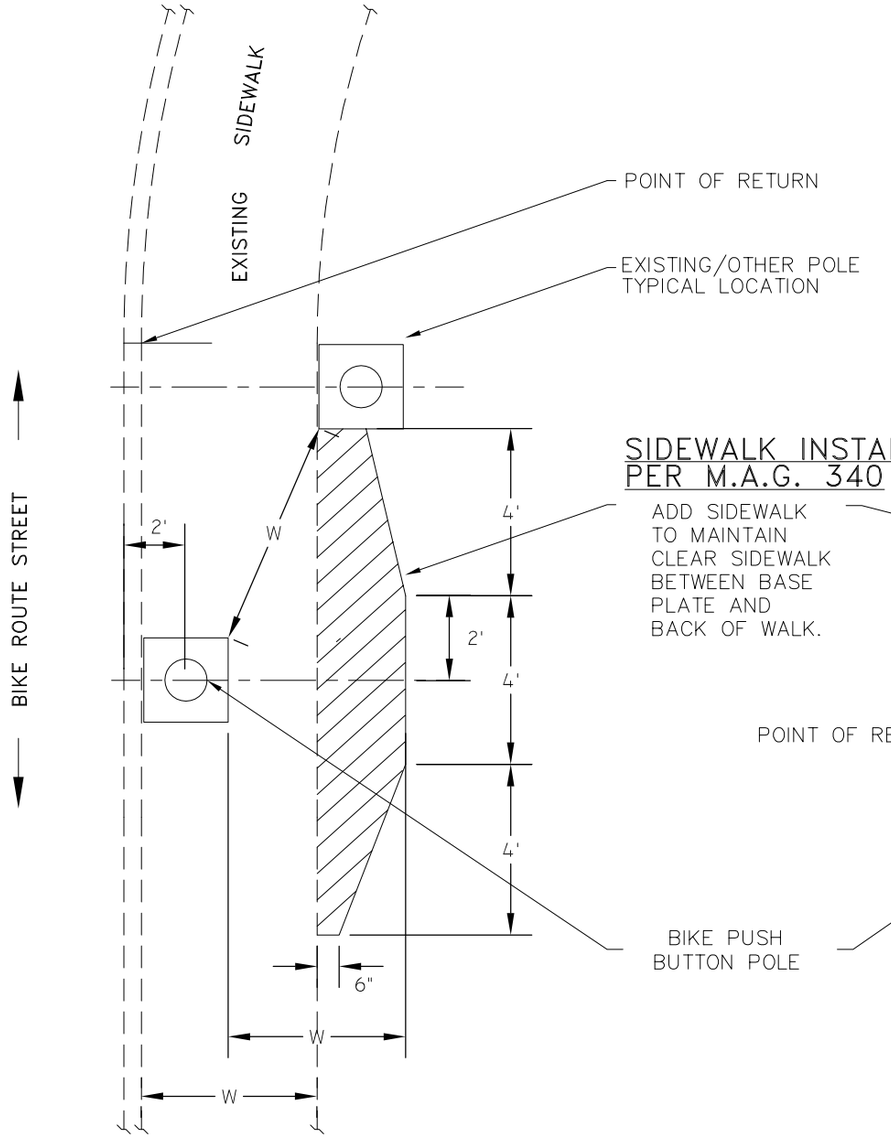

FIGURE B
SOLO INSTALLATION

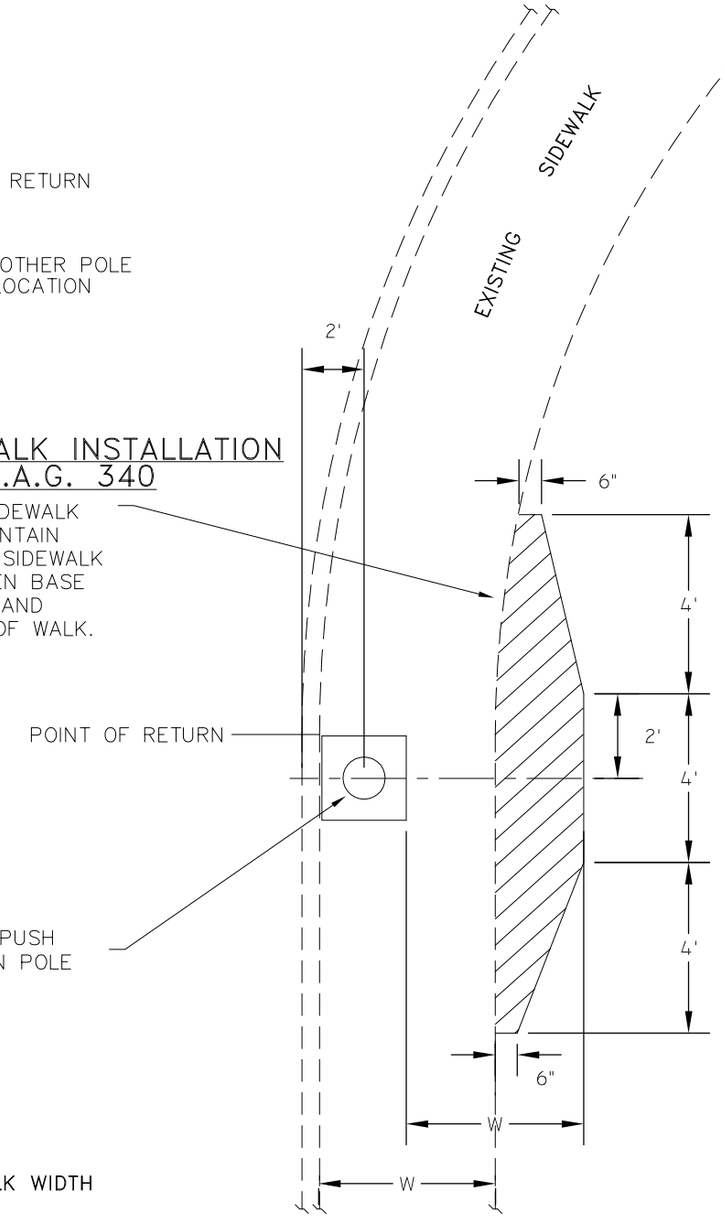

SIDEWALK INSTALLATION PER M.A.G. 340

ADD SIDEWALK TO MAINTAIN CLEAR SIDEWALK BETWEEN BASE PLATE AND BACK OF WALK.

BIKE PUSH BUTTON POLE

W=EXISTING SIDEWALK WIDTH

GENERAL NOTES

1. BOTTOM OF BASE PLATE TO BE FLUSH WITH TOP OF SIDEWALK.
2. INSTALL BIKE PUSH BUTTON FOR BICYCLISTS WITH C POLE 2' BEHIND FACE OF CURB.
3. PUSH BUTTON SHALL FACE CURB.
4. PUSH BUTTON STATION SHALL BE AS DESCRIBED ON M-90.01.
5. PUSH BUTTON STATION PLACARD SHALL BE AS SHOWN ON M-99.01.
6. FOR PUSH BUTTON STATION INSTALLATION REFER TO M-95.05.
7. REFER TO M-94.01 FOR FOUNDATION DETAILS.
8. FOR SIDEWALK CONSTRUCTION REFER TO M.A.G. STANDARD DETAIL 230.

NOT TO SCALE

mesa·az

BIKE PUSH BUTTON INSTALLATION

DETAIL NO. M-94.02

REV. 12/17/2012

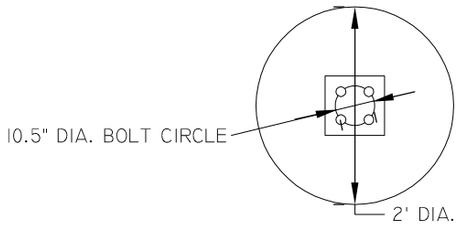

FOUNDATION PLAN

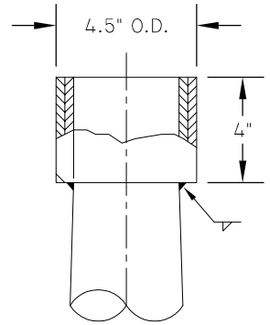

COLLAR DETAIL

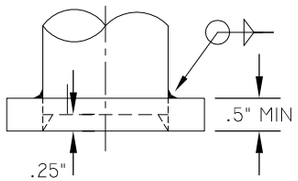

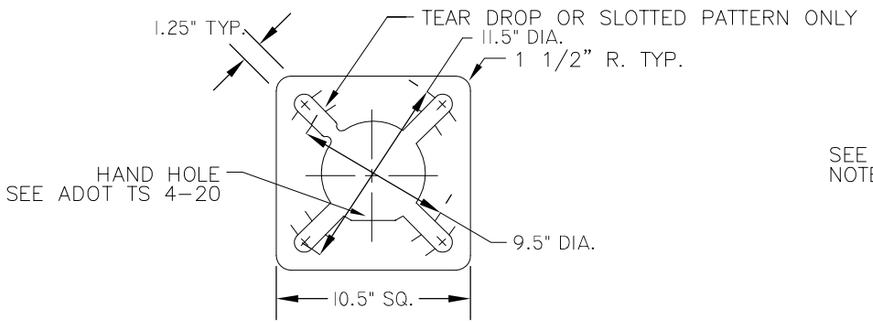

POLE BASE

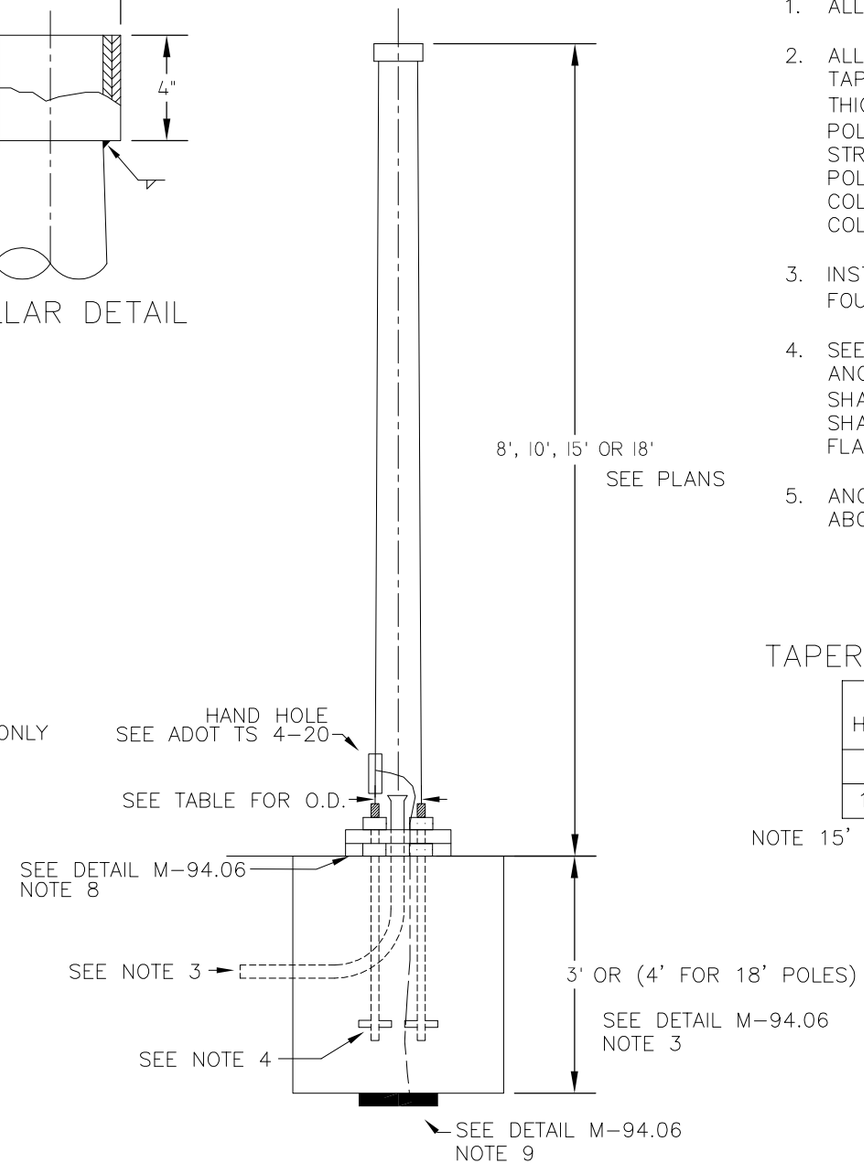

"A" POLE GENERAL NOTES

1. ALL DIMENSIONS ARE IN ENGLISH UNITS.
2. ALL 8' OR 10' "A" POLES MAY BE OF THE TAPERED OR STRAIGHT TYPE, WALL THICKNESS SHALL NOT EXCEED .125". POLE GREATER THAN 10' SHALL BE STRAIGHT WALL TYPE. STRAIGHT WALL POLES SHALL ALSO HAVE A SCHEDULE 40 COLLAR WELDED TO THE POLE PER THE COLLAR DETAIL.
3. INSTALL A SINGLE 2" PVC CONDUIT IN FOUNDATION AT 36" DEPTH.
4. SEE ADOT TS 4-23 DETAIL "B" FOR ANCHOR BOLT DETAILS. ANCHOR BOLTS SHALL BE 1" X 35", EACH ANCHOR BOLT SHALL HAVE FOUR HEX NUTS AND TWO FLAT WASHERS.
5. ANCHOR BOLTS SHALL PROJECT 3 1/2" ABOVE THE FINISHED SIDEWALK.

TAPERED POLE DIAMETER TABLE

HEIGHT	BASE	TOP
8'-0"	5.2"	4.1"
10'-0"	5.5"	4.1"

NOTE 15' & 18' "A" POLES- STRAIGHT ONLY

NOT TO SCALE

mesa·az

TRAFFIC SIGNAL POLE - TYPE "A"

DETAIL NO. M-94.03

REV. 01/31/2014

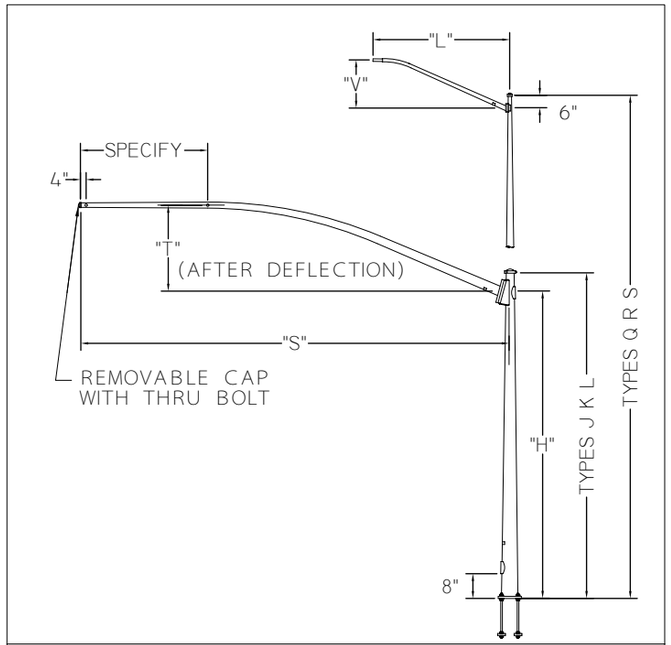

ARIZONA POLE SERIES

DEVICE	DESCRIPTION	PROJ. AREA (FT^2)	WEIGHT (LBS)
① SIGNAL	5 SECTION SIGNAL W/ BACKPLATES	15.55	53
② SIGN	DIRECTIONAL SIGN	7.50	25.0
③ SIGNAL	12" - 3 SECTION W/ BACKPLATES	8.24	39
④ SIGN	STREET NAME SIGN	25.00	300.0
⑤ CAMERA	VIDEO DETECTION CAMERA W/ 1' RISER	1.00	15

*POLE MANUFACTURER TO PROVIDE ARIZONA PE STAMPED SUBMITTAL DRAWINGS AND POLE CALCULATIONS.

*POLE AND MAST ARM SIZED BY MANUFACTURER BASED ON LOADING AND DESIGN CRITERIA.

REFER TO M-94.05 AND M-94.06 SPECIFIC TRAFFIC SIGNAL POLE DETAILS AND TRAFFIC SIGNAL POLE TABLES AND GENERAL NOTES

DESIGN CRITERIA

DESIGNED TO WITHSTAND PRESSURES EQUIVALENT TO 80 MPH ISOTACH WIND VELOCITY. WITH A 1.3 GUST FACTOR, AS DEFINED BY THE AASHTO "STANDARD SPECIFICATIONS FOR STRUCTURAL SUPPORTS FOR HIGHWAY SIGNS, LUMINAIRES, AND TRAFFIC SIGNALS", 1994.

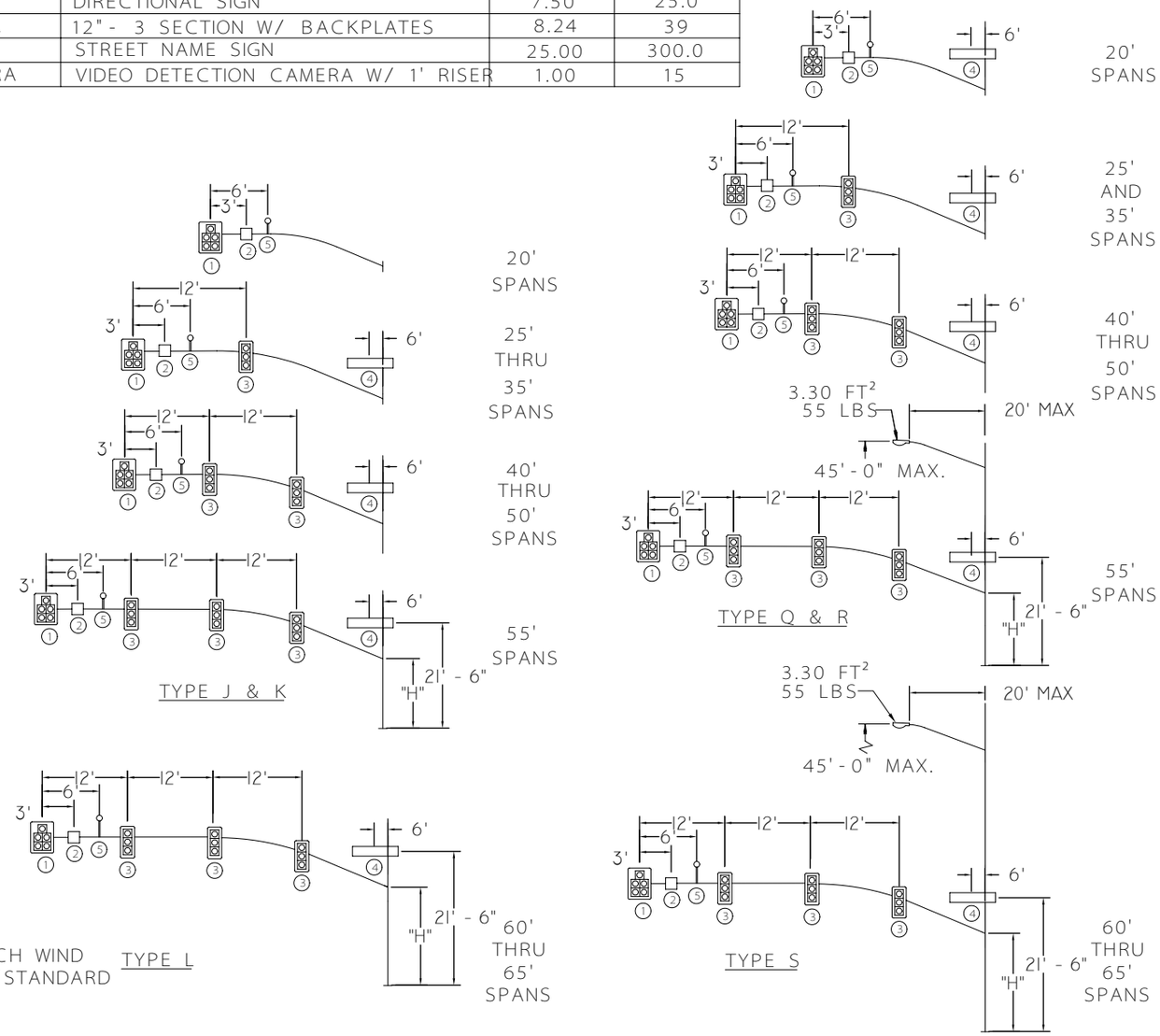

MAX. LOADING INFORMATION

NOT TO SCALE

mesa·az

TRAFFIC SIGNAL POLES

DETAIL NO. M-94.04

REV. 01/31/2014

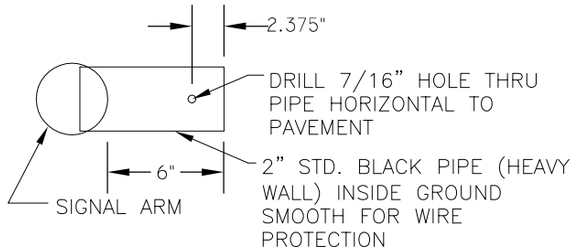

END OF SIGNAL MAST ARM TENON VIEW

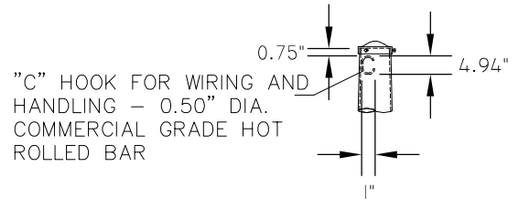

TOP OF TRAFFIC SIGNAL POLE

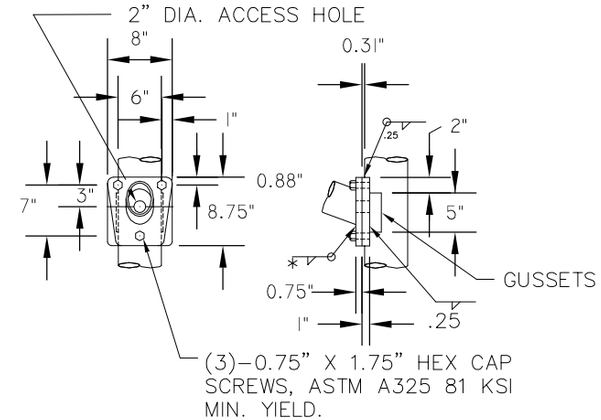

LUMINAIRE MAST ARM

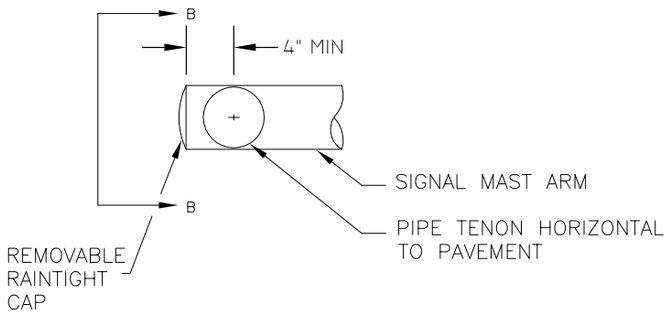

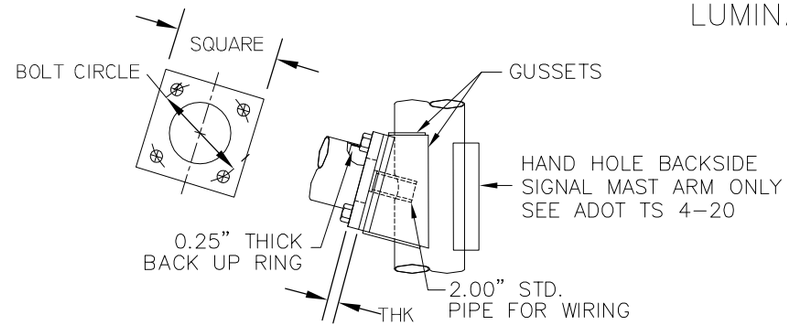

SIGNAL MAST ARM

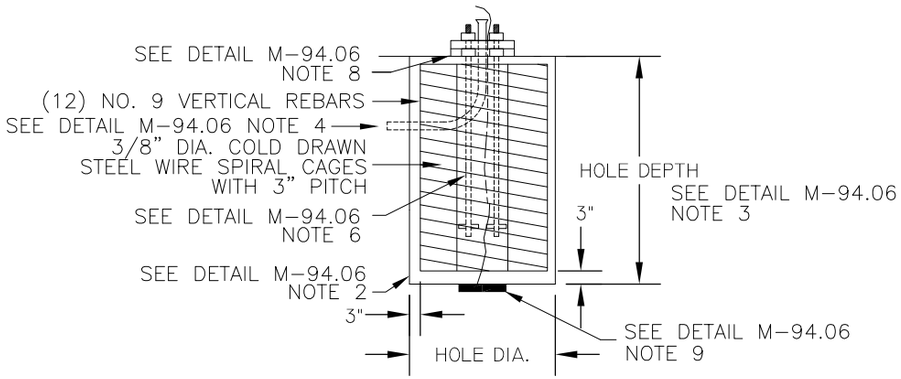

FOUNDATIONS

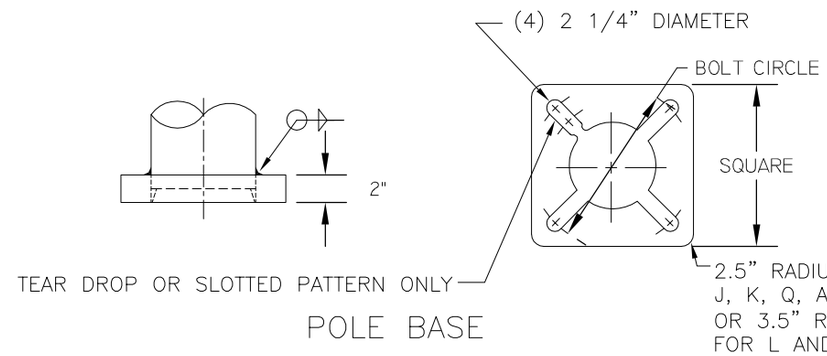

POLE BASE

NOT TO SCALE

mesa·az

TRAFFIC SIGNAL POLE DETAILS

DETAIL NO. M-94.05

REV. 01/31/2014

POLE TYPE	POLE TUBE	POLE BASE				SIGNAL MAST ARM			
	LENGTH (FT)	SQUARE (IN)	BOLT CIRCLE (IN)	THK. (IN)	HOLE/SLOT SIZE (IN)	SQUARE (IN)	BOLT CIRCLE (IN)	THK. (IN)	HOLE/SLOT SIZE (IN)
J	22.17	18.00	17.00–18.00	2.00	2.25 X 2.75	13.00	13.00	1.50	
K	22.17	18.00	17.50–18.00	2.00	2.25 X 2.50	15.00	15.00	1.75	
Q	35.00	18.00	17.00–18.00	2.00	2.25 X 2.75	13.00	13.00	1.50	
R	35.00	18.00	17.50–18.00	2.00	2.25 X 2.50	15.00	15.00	1.75	
L	22.17	23.00	23.00	2.00	2.25	20.00	20.00	2.00	
S	35.00	23.00	23.00	2.00	2.25	20.00	20.00	2.00	

SIGNAL ARM DATA			
TYPE	ARM SPAN "S" (FT)	RISE "T" (FT)	ARM MOUNTING HEIGHT "H" (FT)
J & Q	20	7.00	14.00
	25	7.00	14.00
	30	7.00	14.00
	35	7.00	14.00
	40	7.00	14.00
K & R	45	7.00	14.00
	50	7.00	14.00
	55	7.00	14.00
L & S	60	7.00	14.00
	65	7.00	14.00

LUMINAIRE ARM DATA	
ARM SPAN "L" (FT)	RISE "V" (FT)
18	5.75
20	5.75
20 (TS–104)	10.50

FOUNDATIONS			ANCHOR BOLT INFO	
POLE	HOLE DIAMETER	HOLE DEPTH	BOLT DIAMETER	BOLT LENGTH
J	3'	10'	2"	70"
K	3'	10'	2"	70"
Q	3'	10'	2"	70"
R	3'	10'	2"	70"
L	4'	17'	2"	70"
S	4'	17'	2"	70"

TRAFFIC SIGNAL POLE GENERAL NOTES

1. ALL MATERIALS AND CONSTRUCTION SHALL CONFORM TO THE REQUIREMENTS OF THE CITY OF MESA SPECIFICATIONS.
2. THE FOUNDATION HOLE SHALL BE AUGERED AND CLASS "A" CONCRETE (3,000 PSI PER M.A.G. STANDARD 725) POURED AGAINST UNDISTURBED COMPACTED EARTH.
3. UNSTABLE SOIL MAY REQUIRE DEEPER FOUNDATION; SEE ADOT SPECIFICATIONS, ROAD AND BRIDGE CONSTRUCTION, SECTION 731-3.01.
4. INSTALL 1 - 3" PVC CONDUIT IN FOUNDATION AT 36" DEPTH.
5. CONDUIT SHALL PROJECT A MINIMUM OF 4 INCHES ABOVE THE FOUNDATION. MAXIMUM PROJECTION SHALL BE 6 INCHES.
6. SEE ADOT TS 4-23 DETAIL "B" FOR ANCHOR BOLT DETAILS. ANCHOR BOLT INFORMATION CAN BE FOUND IN CHART BY POLE TYPE. EACH ANCHOR BOLT SHALL HAVE FOUR HEX NUTS AND TWO FLAT WASHERS.
7. ANCHOR BOLTS SHALL PROJECT 8 INCHES ABOVE THE FOUNDATION.
8. THE LEVELING NUTS SHALL BE INSTALLED ON TOP OF CONCRETE POLE BASE. SPACE BETWEEN CONCRETE POLE BASE AND POLE BASE AROUND LEVELING NUTS SHALL BE GROUTED WITH A WEEP HOLE. THE WEEP HOLE SHALL BE CONSTRUCTED OF 1/2" COTTON ROPE AND BE ORIENTED ON THE OPPOSITE SIDE OF THE POLE FROM THE STREET. SEE ADOT SPECIFICATIONS, ROAD AND BRIDGE CONSTRUCTION, SECTION 731- 3.01.
9. GROUNDING AS SHOWN ON DETAIL M-92.03 NOTE 1 SHALL BE INSTALLED BEFORE THE CONCRETE IS POURED AND CONNECTED TO POLE GROUNDING SCREW IN THE HAND HOLE.
10. FINISH TO BE GALVANIZED UNLESS OTHERWISE SPECIFIED ON PLANS.
11. CITY OF MESA SIGNAL POLES SHALL HAVE A HAND HOLE MANUFACTURE INSTALLED OPPOSITE THE SIGNAL MAST ARM PLATE (ADOT TS 4-20) AND A J-HOOK.
12. **FOUR 1.25" - 7UNC HIGH STRENGTH CONNECTING BOLTS (ASTM-A354 GR. BC) ARE REQUIRED FOR 20-55' SIGNAL MAST ARMS. FOUR 1.5" - 6UNC HIGH STRENGTH CONNECTING BOLTS (ASTM-A325 GR. BC) ARE REQUIRED FOR 60-65' SIGNAL MAST ARMS.**
13. ALL SIGNAL MAST ARMS SHALL BE OF ONE PIECE CONSTRUCTION.
14. A STAINLESS STEEL TAG SHALL BE PERMANENTLY ATTACHED TO THE POLE ABOVE THE HAND HOLE STATING THE MANUFACTURER'S NAME, C.O.M. POLE TYPE AND DATE MANUFACTURED.
15. MANUFACTURER TO SUPPLY STRUCTURAL SHOP DRAWINGS AND CALCULATIONS SEALED BY; REGISTERED ARIZONA STRUCTURAL ENGINEER.

mesa·az

TRAFFIC SIGNAL POLE NOTES

DETAIL NO.
M-94.06

REV. 12/1/2014

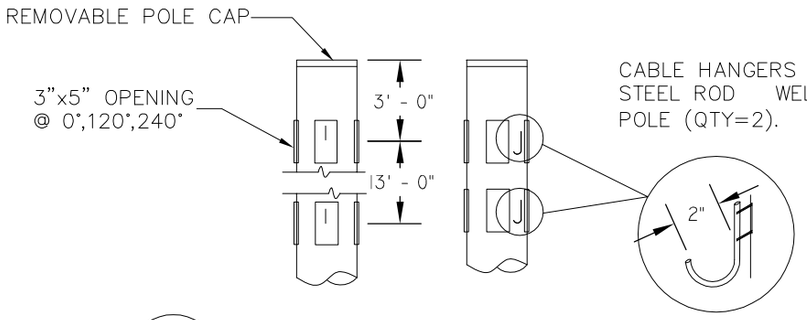

A POLE TOP DETAIL

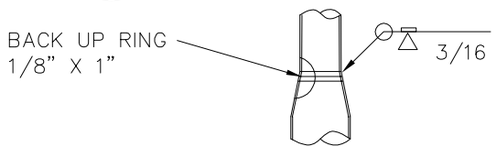

B CONNECTION DETAIL

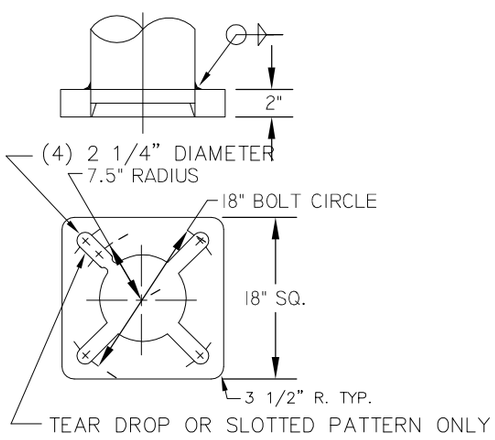

POLE BASE

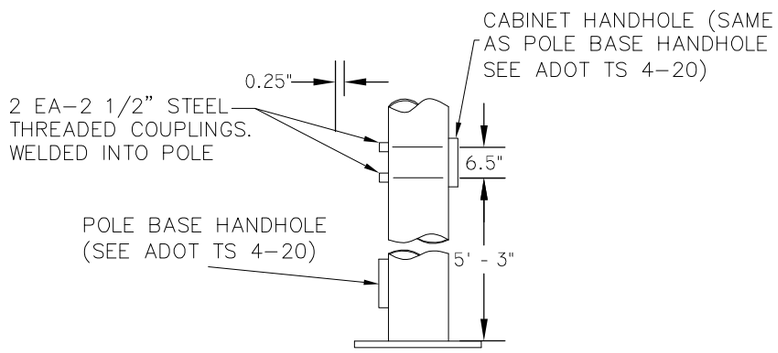

C HANDHOLE DETAIL
(FOR CCTV CABINET)

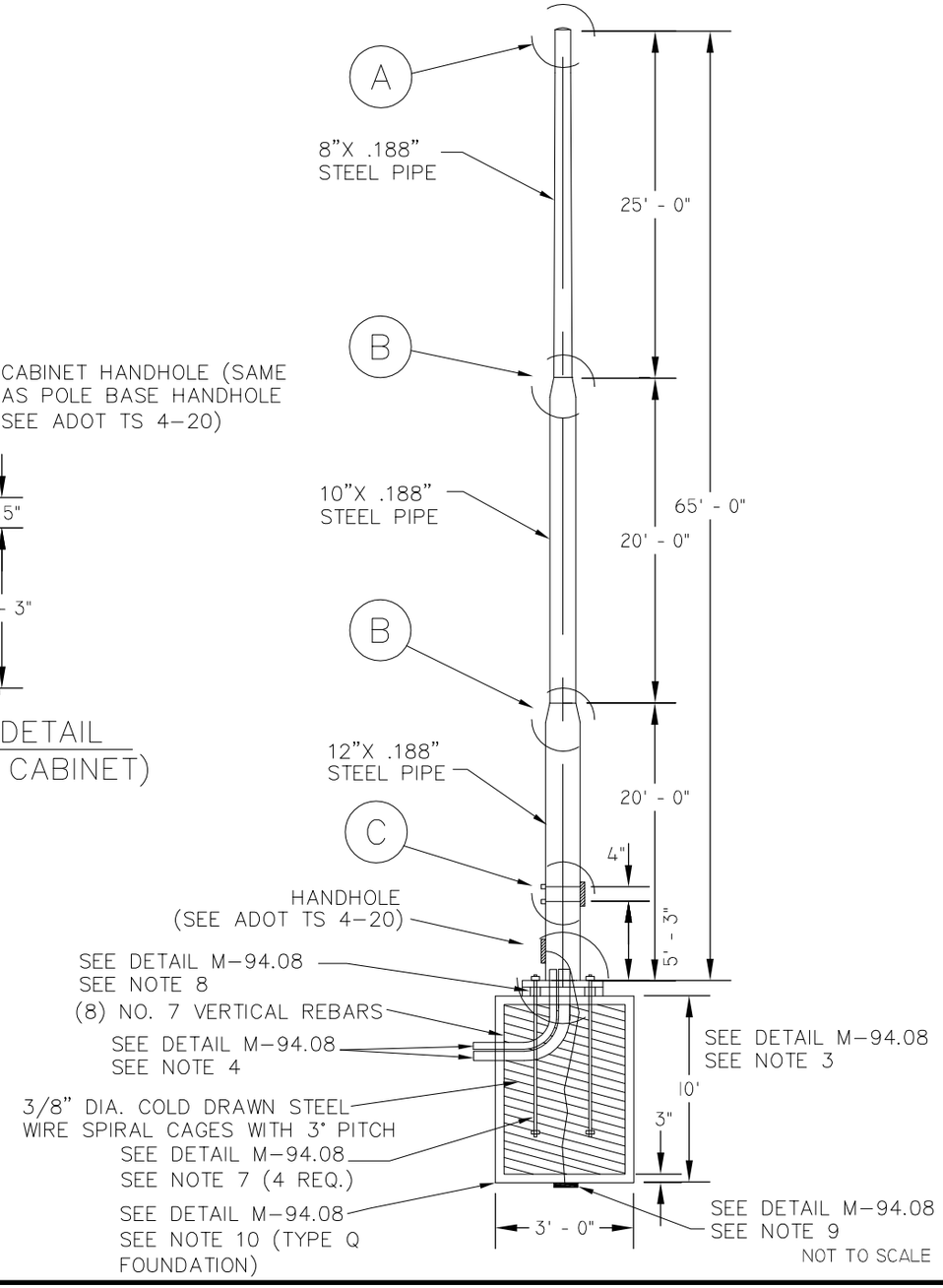

NOT TO SCALE

mesa·az

TRAFFIC SIGNAL POLE - TYPE "ITS" 65'

DETAIL NO.
M-94.07

REV. 01/31/2014

GENERAL NOTES

1. ALL MATERIALS AND CONSTRUCTION SHALL CONFORM TO THE REQUIREMENTS OF THE ADOT STANDARDS SPECIFICATIONS, SECTION 731.
2. THE FOUNDATION HOLE SHALL BE AUGERED AND CLASS "A" CONCRETE (3000 PSI PER M.A.G. STANDARD 725) POURED AGAINST UNDISTURBED COMPACTED EARTH.
3. UNSTABLE SOIL MAY REQUIRE DEEPER FOUNDATION:SEE ADOT SPECIFICATIONS. ROAD AND BRIDGE CONSTRUCTION SECTION 731-3.01).
4. INSTALL 1 - 3" AND 1 - 2" PVC CONDUIT IN FOUNDATION AT 36" DEPTH.
5. CONDUIT SHALL PROJECT A MINIMUM OF 4 INCHES ABOVE THE FOUNDATION MAXIMUM PROJECTION SHALL BE 6 INCHES.
6. SEE ADOT STD DRAWING TS 4-23 DETAIL "B" FOR ANCHOR BOLT DETAILS. ANCHOR BOLTS SHALL BE 2" X 70". EACH ANCHOR BOLT SHALL HAVE FOUR HEX NUTS AND TWO FLAT WASHERS.
7. ANCHOR BOLTS SHALL PROJECT 8 INCHES ABOVE THE FOUNDATION.
8. THE LEVELING NUTS SHALL BE INSTALLED ON TOP OF CONCRETE POLE BASE. SPACE BETWEEN CONCRETE POLE BASE AND POLE BASE AROUND LEVELING NUTS SHALL BE GROUTED WITH A WEEP HOLE. THE WEEP HOLE SHALL BE CONSTRUCTED 1/2" COTTON ROPE AND BE ORIENTED ON THE OPPOSITE SIDE OF THE POLE FROM THE STREETSEE ADOT SPECIFICATIONS. ROAD AND BRIDGE CONSTRUCTION SECTION 731-3.01.
9. GROUNDING AS SHOWN ON DETAIL M-92.3 NOTE 1 SHALL BE INSTALLED BEFORE THE CONCRETE IS POURED AND CONNECTED TO POLE GROUNDING SCREW IN THE HAND POLE.
10. THE POLE SHAFT MATERIAL SHALL HAVE MINIMUM YIELD STRENGTH OF 42 KSI.
11. ALL OTHER PIPE AND PLATE SHALL HAVE MINIMUM WELD STRENGTH OF 36 KSI.
12. WELDING SHALL CONFORM TO AWS D1.1 (LATEST EDITION).
13. DEFLECTION AT THE TOP OF THE POLE SHALL BE NO MORE 1.5" AT 30 MPH WIND.
14. FINISH TO BE GALVANIZED PER ASTM A 123 UNLESS OTHERWISE SPECIFIED ON PLANS.
15. A STAINLESS STEEL TAG SHALL BE PERMANENTLY ATTACHED TO THE POLE ABOVE THE HAND HOLE STATING THE MANUFACTURE'S NAME. C.O.M. POLE TYPE AND DATE MANUFACTURED.
16. SEE DETAIL M-95.0 FOR ANTENNA CLAMP ASSEMBLY.
17. ALL SUPPORTS SHALL BE DESIGNED TO WITHSTAND 80 MPH WINDS PER AASHTO SPECIFICATIONS.

mesa·az

TRAFFIC SIGNAL POLE - TYPE "ITS" - NOTES

DETAIL NO.
M-94.08

REV. 01/31/2014

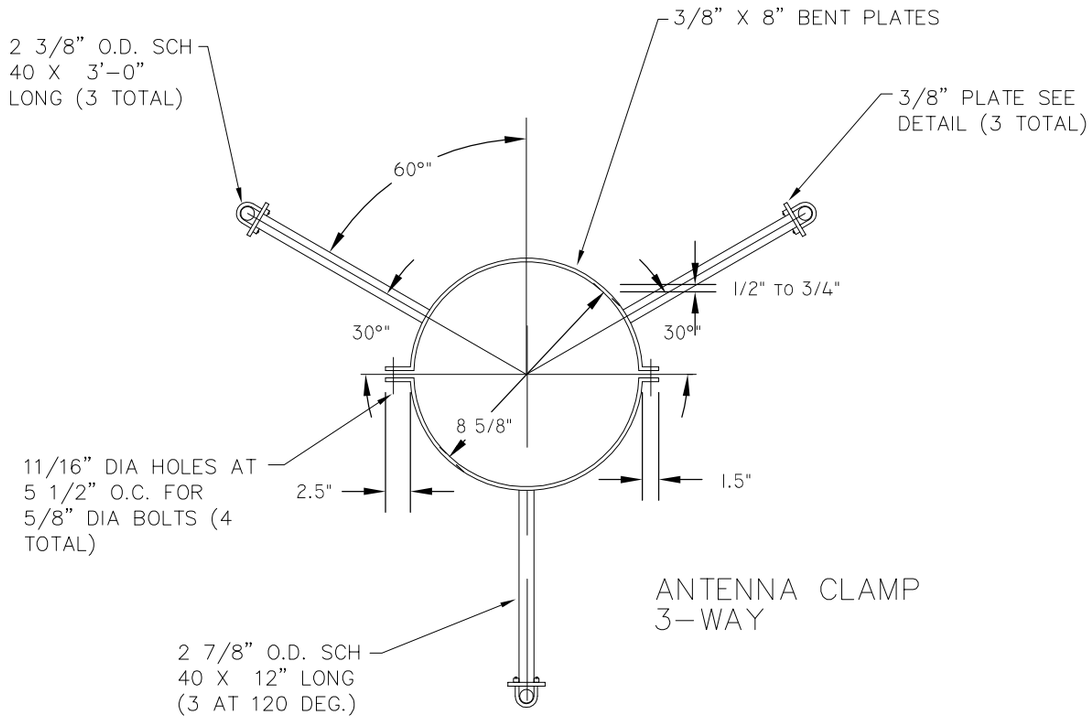

ANTENNA CLAMP
3-WAY

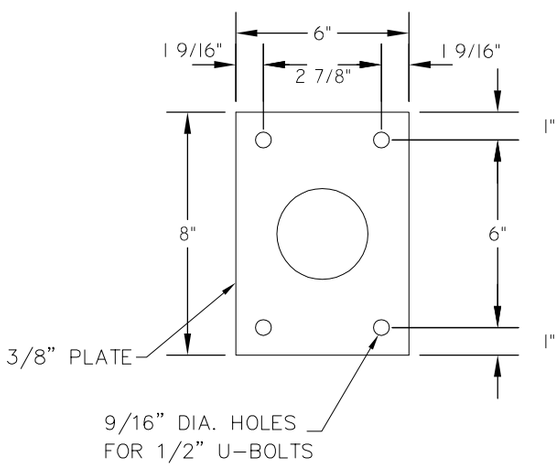

ANTENNA ATTACHMENT PLATE

GENERAL NOTES

1. ALL MATERIALS AND CONSTRUCTION SHALL CONFORM TO THE REQUIREMENTS OF THE ADOT STANDARD SPECIFICATIONS, SECTION 731.
2. FINISH TO BE GALVANIZED PER ASTM A123 UNLESS OTHERWISE SPECIFIED ON PLANS.
3. ALL SUPPORTS SHALL BE DESIGNED TO WITHSTAND 80 MPH WINDS PER AASHTO SPECIFICATIONS.
4. SEE DETAIL M-94.07 FOR ITS POLE, 65'.

FURNISH WITH EACH CLAMP ASSEMBLY	
QTY	ITEM
4	5/8" DIA. X 2 1/2" HHMB W/NUTS AND WASHERS (GALVANIZED)
3	2 3/8" O.D. X 3'-0" SCH 40 STD PIPE (GALVANIZED)
6	1/2" NUTS (GALVANIZED)
24	1/2" WASHERS (GALVANIZED)

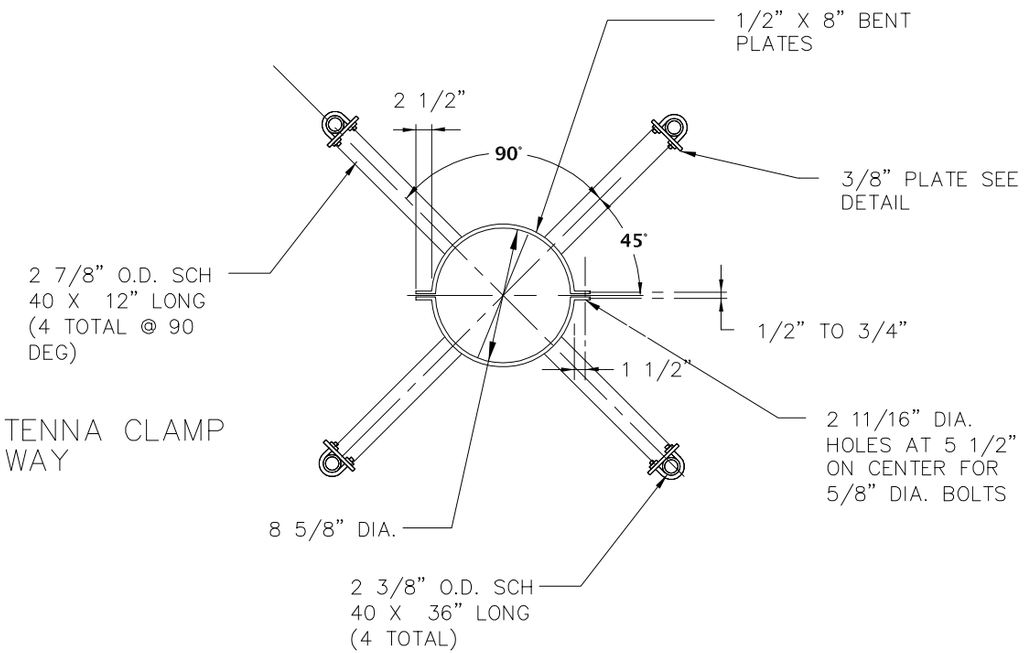

ANTENNA CLAMP
4-WAY

NOT TO SCALE

mesa·az

3-ANTENNA CLAMP ASSEMBLY FOR 65' ITS POLE

DETAIL NO.
M-94.09

REV. 12/18/2012

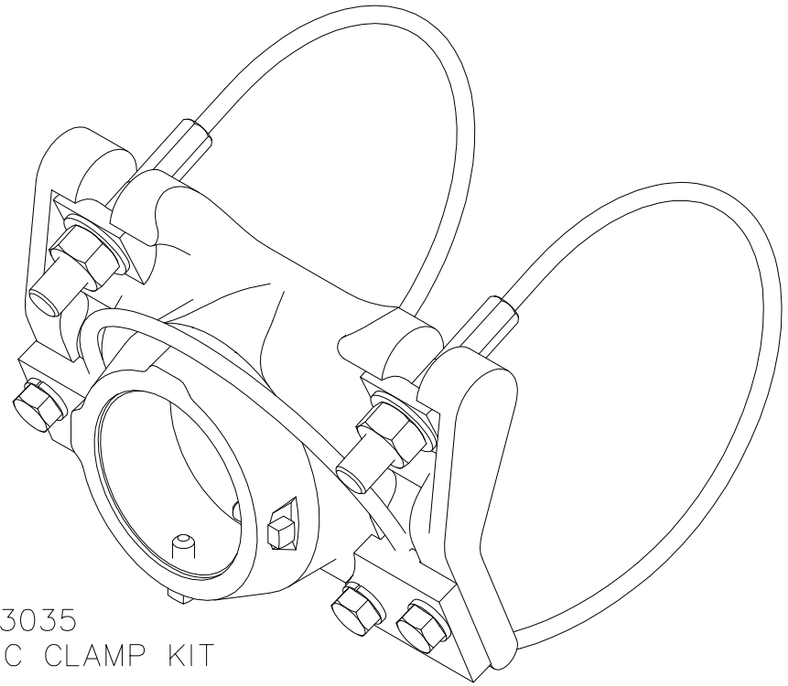

PELCO AB–3035
ASTRO–BRAC CLAMP KIT

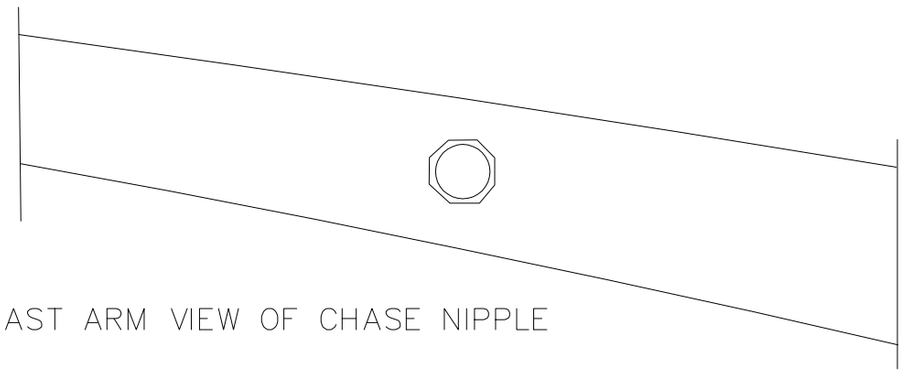

MAST ARM VIEW OF CHASE NIPPLE

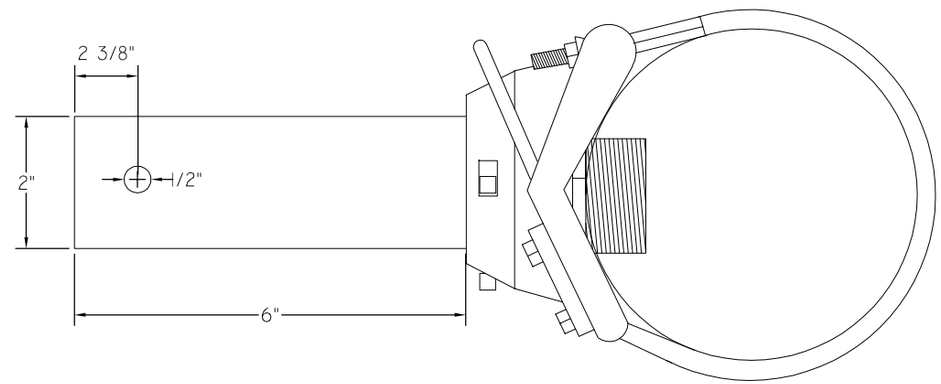

MAST ARM SECTION DETAIL

PELCO MOUNT GENERAL NOTES

1. A 1–1/8" HOLE SHALL BE DRILL INTO THE SIDE OF THE MAST ARM AT THE APPROPRIATE LOCATION, (USE OF A HOLE SAW IS PERMISSIBLE) AND THEN TAPPED WITH A 1" PIPE TAP. A STANDARD 1" CHASE NIPPLE SHALL BE INSTALLED IN THE OPENING. (TO PROTECT THE STRUCTURAL INTEGRITY OF THE MAST ARM, THIS PROCESS IS NECESSARY).
2. A PELCO AB–3035 ASTRO–BRAC CLAMP KIT WITH CABLES OF THE APPROPRIATE LENGTH WILL BE INSTALLED OVER THE 1" CHASE NIPPLE. ANTISEIZE COMPOUND MUST BE USED ON ALL STAINLESS STEEL THREADS.
3. A PELCO SE–0494–6–PNC PIPE NIPPLE SHALL BE INSTALLED INTO ASTRO BRA THREADED OPENING WITH ANTI–SEIZE COMPOUND. THE TWO SETSCREWS SHALL BE SECURELY TIGHTENED AGAINST THE PIPE NIPPLE. ONCE THE SIGNAL HEAD IS INSTALLED THE 3/8" HOLES FOR THE SAFETY BOLT SHALL BE DRILLED AND THE SAFETY BOLT INSTALLED AND SECURED.

NOT TO SCALE

mesa·az

TRAFFIC SIGNAL MAST ARM PELCO MOUNT

DETAIL NO.
M-94.10

REV. 12/1/2014

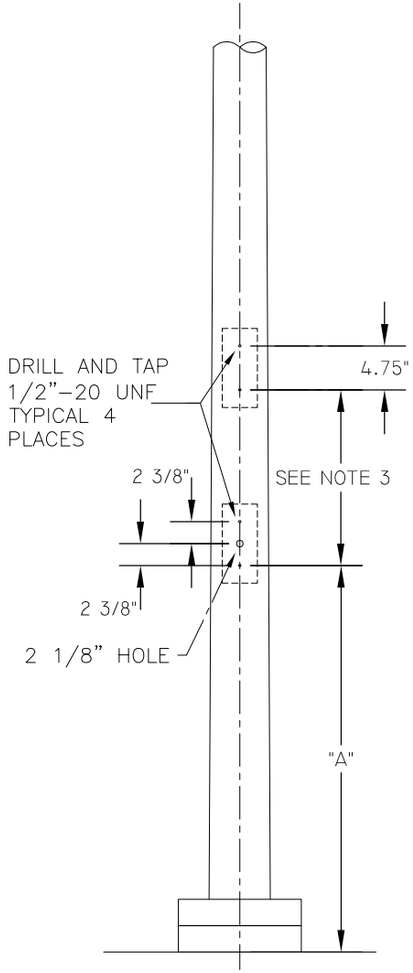

POLE PLATE
DRILLING DETAIL

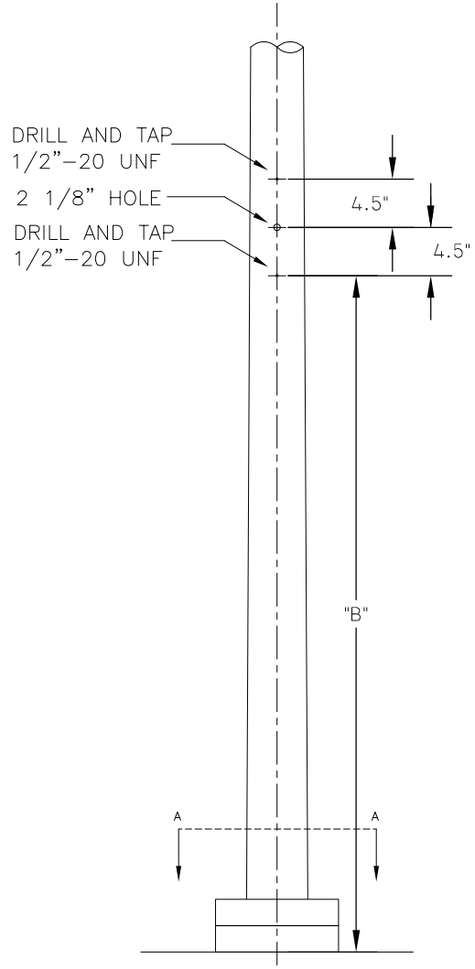

SIDE MOUNT
DRILLING DETAIL

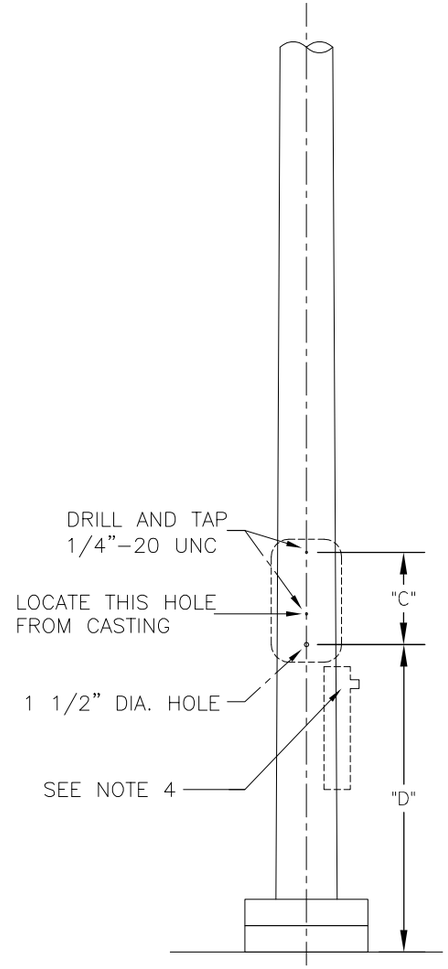

DRILLING DETAIL

COM STANDARD SADDLE MOUNT ON ALL
POLES UNLESS NOTED OTHERWISE

GENERAL NOTES

1. ALL DIMENSIONS ARE IN INCHES.
2. DRILLING OF POLE TO BE ORIENTED ACCORDING TO TRAFFIC SIGNAL PLAN, OR AS DIRECTED BY THE ENGINEER IN THE FIELD. CONTRACTOR SHALL LAYOUT POLE WITH INSPECTOR PRIOR TO DRILLING FOR MOUNTS.
3. TOP MOUNTING HOLES TO BE FIELD DRILLED IN ORDER TO ALLOW FOR MANUFACTURING VARIATIONS.
4. WHEN TWO PUSH BUTTON STATIONS ARE MOUNTED ON A SMALL DIAMETER POLE, THE LOWER CASTING SHALL HAVE ITS BUTTON ON TOP.
5. ON "A" POLES THE HAND HOLE SHALL BE ORIENTED TO FACE THE NEAREST SIDEWALK, OR AS DIRECTED BY THE ENGINEER IN THE FIELD.

ITEM	DIM "A"	DIM "B"
COUNTDOWN PED SIGNAL	87"	87"
ILLUMINATED MESSAGE	87"	
TERMINAL COMPARTMENT	125"	125"
STANDARD SIGNAL	125"	125"
F	125"	125"
Q	125"	125"

ITEM	DIM "C"	DIM "D"
ADA PEDESTRIAN BUTTON	11 3/8"	42"
BIKE BUTTON	11 3/8"	36"

NOT TO SCALE

mesa·az

SIGNAL POLE DRILLING DETAIL

DETAIL NO.
M-95.01

REV. 01/31/2014

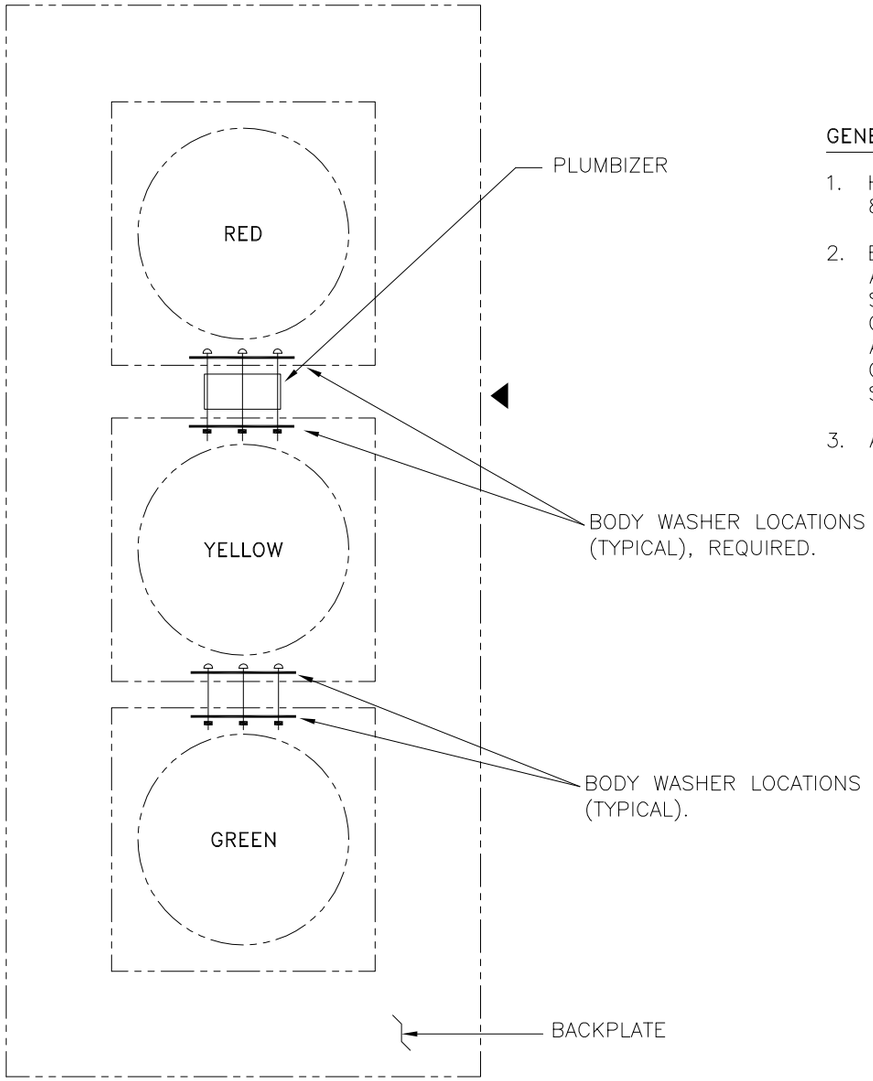

GENERAL NOTES

1. HEADS SHALL BE DESIGNED TO WITHSTAND 80 MPH WINDS.
2. BODY WASHERS SHALL BE USED BETWEEN ALL HEAD SECTIONS. BODY WASHERS SHALL BE OF THE TYPE SHOWN. ROUND CENTER HOLE WASHERS ARE NOT ACCEPTABLE. WASHERS SHALL BE MADE OF STAINLESS STEEL OR ZINC PLATED STEEL.
3. ALL SIGNAL INDICATIONS SHALL BE L.E.D.

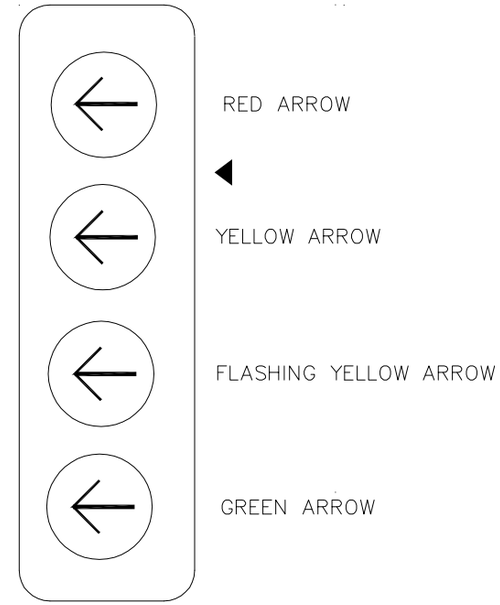

FLASHING YELLOW ARROW "FY"
SIGNAL HEAD CONFIGURATION

PLUMBIZER

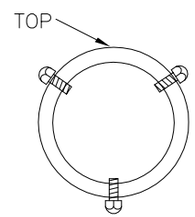

TENON VIEW

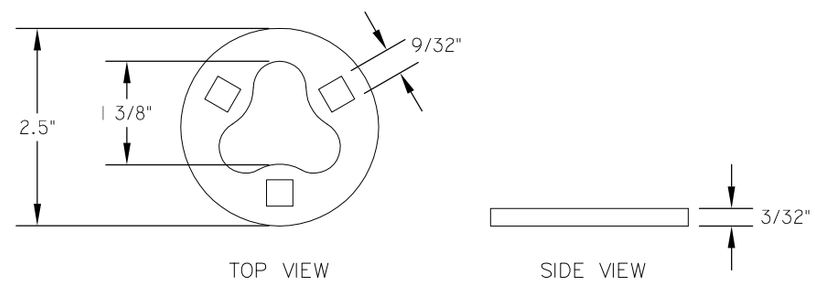

BODY WASHER

◀ INDICATES LOCATION OF ELEVATOR PLUMBIZER FOR MAST ARM MOUNTS.

NOT TO SCALE

mesa·az

SIGNAL HEAD ASSEMBLY

DETAIL NO.
M-95.02

REV. 12/1/2014

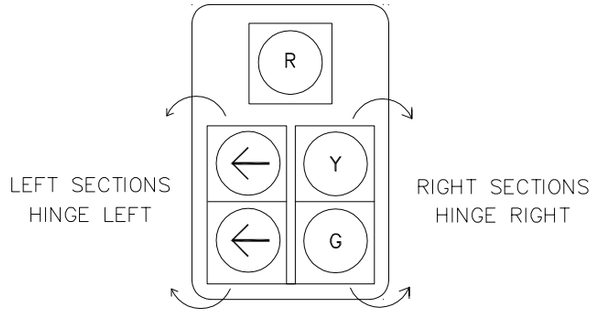

FRONT VIEW
(SEE NOTE #9 ON DETAIL M-95.05)

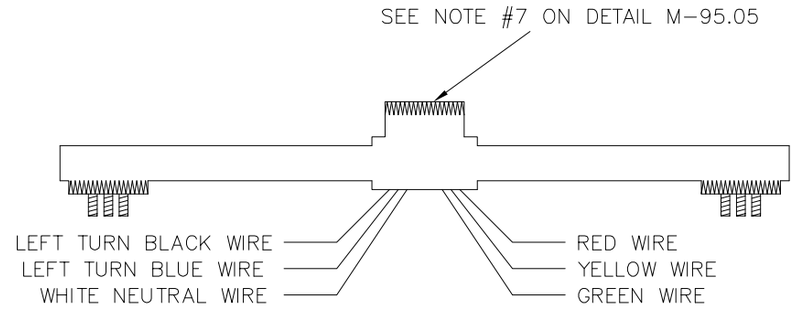

2-WAY TOP ASSEMBLY WIRING DETAIL

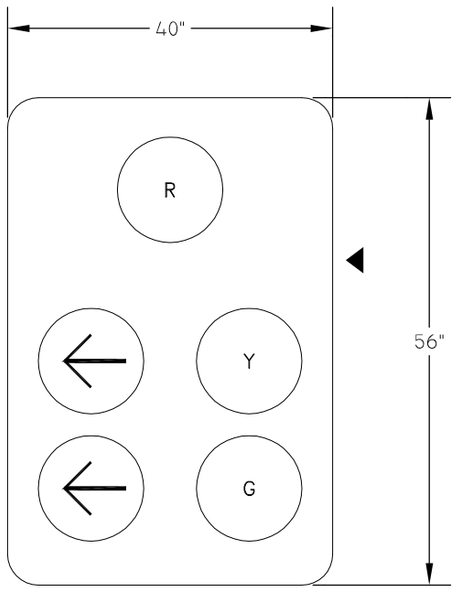

FRONT VIEW

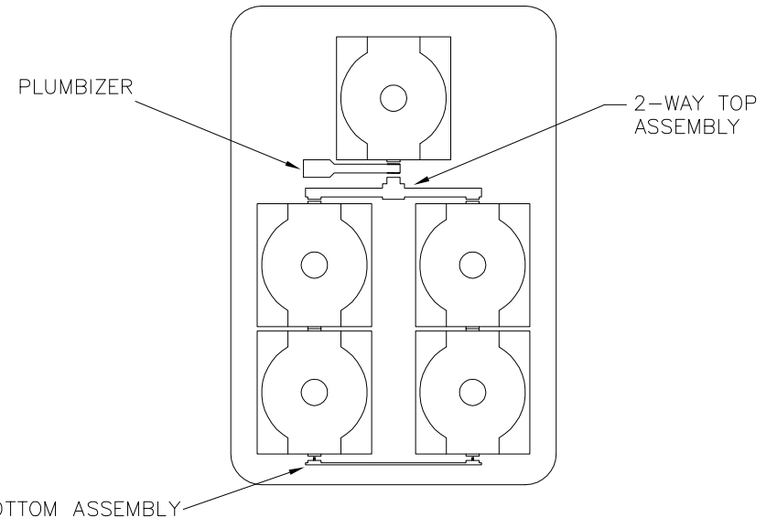

BACK VIEW

HEAD ASSEMBLY

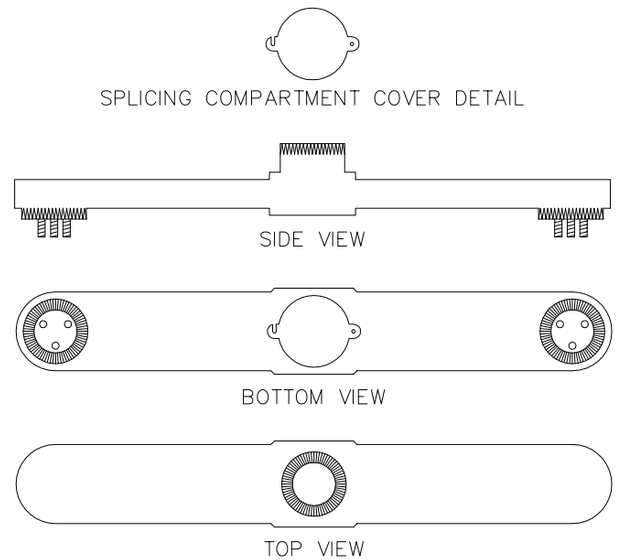

2-WAY TOP ASSEMBLY

◀ INDICATES LOCATION OF ELEVATOR PLUMBIZER FOR MAST ARM MOUNTS.

NOT TO SCALE

mesa·az

TYPE "S" CLUSTER HEAD

DETAIL NO.
M-95.03

REV. 12/1/2014

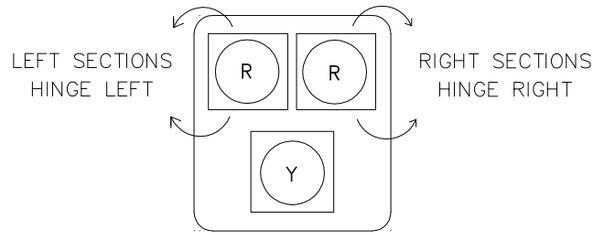

FRONT VIEW
(SEE NOTE #9)

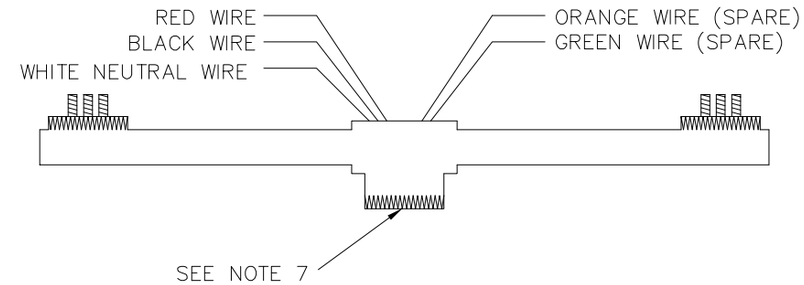

2-WAY BOTTOM ASSEMBLY WIRING DETAIL

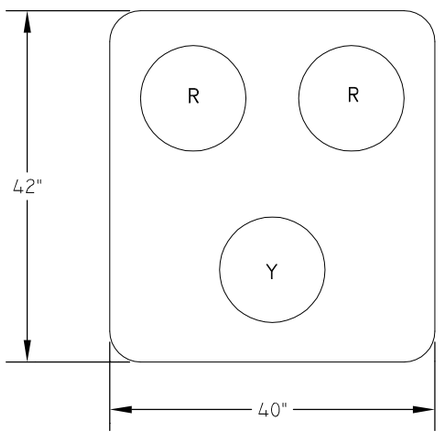

FRONT VIEW

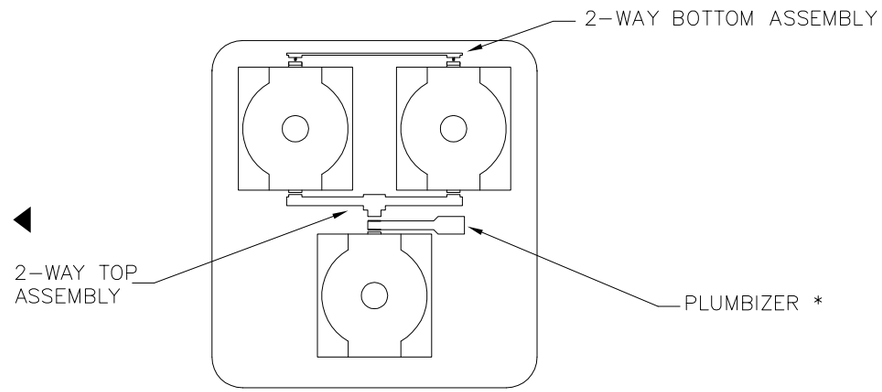

BACK VIEW

* PLUMBIZER- WILL NOT BE USED FOR POLE (SIDE) MOUNT LOCATIONS), A TYPE V MOUNT SHALL BE USED.

HEAD ASSEMBLY

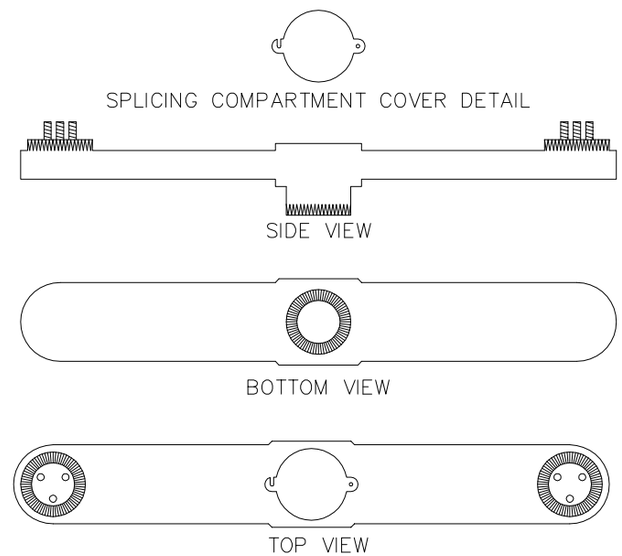

2-WAY TOP ASSEMBLY

◀ INDICATES LOCATION OF ELEVATOR PLUMBIZER FOR MAST ARM MOUNTS.

NOT TO SCALE

mesa·az

TYPE "T" CLUSTER HEAD

DETAIL NO.
M-95.04

REV. 01/31/2014

GENERAL NOTES

1. ALL DIMENSIONS SHOWN ARE NOMINAL AND ARE IN INCHES.

2. ALL MATERIALS AND CONSTRUCTION SHALL CONFORM TO THE REQUIREMENTS OF THE SPECIFICATIONS.

3. "DOG LEG" PLUMBIZER TO BE PROVIDED. STRAIGHT PLUMBIZER IS NOT TO BE USED.

4. BACKPLATES SHALL BE CONSTRUCTED WITH NO OPEN GAPS BETWEEN BACKING PLATE SECTIONS OR NEXT TO HEAD. BACKPLATES SHALL BE MADE OF NO MORE THAN THREE PIECES.

5. HEADS SHALL BE FACTORY PRE-WIRED. THE NEUTRAL WIRE SHALL BE LOOPED BETWEEN THE TWO SIDES OF THE SIGNAL HEAD AND ONLY ONE NEUTRAL SHALL BE BROUGHT OUT TO THE SPLICING COMPARTMENT. WIRE SHALL BE 16 AWG THW PER ADOT 733-2.04. WIRE SHALL EXTEND PAST THE SPLICING COMPARTMENT OPENING BY 6 INCHES.

6. SPLICING COMPARTMENT COVER SHALL BE DESIGNED SO THAT IT MAY BE FLIPPED OUT OF THE WAY AS SHOWN ON THE SPLICING COMPARTMENT COVER DETAIL.

7. STACKED WASHERS OR SPACERS SHALL NOT BE USED ON TOP OF THE 2-WAY TOP ASSEMBLY. THE 2-WAY TOP ASSEMBLY SHALL BE BUILT WITH SUFFICIENT TOP CLEARANCE SO THAT THE PLUMBIZER CAN BE PARALLEL OR PERPENDICULAR TO THE BACKPLATE.

8. ALL SIGNAL INDICATIONS SHALL BE L.E.D.

9. YELLOW AND GREEN INDICATIONS OF A 5-SECTION HEAD AND THE DOUBLE DOOR RED INDICATIONS IN THE "T" HEAD SHALL OPEN IN OPPOSITE DIRECTIONS, "SUICIDE DOORS".

mesa·az

TYPE "S" AND "T" CLUSTER HEAD NOTES

DETAIL NO.
M-95.05

REV. 01/31/2014

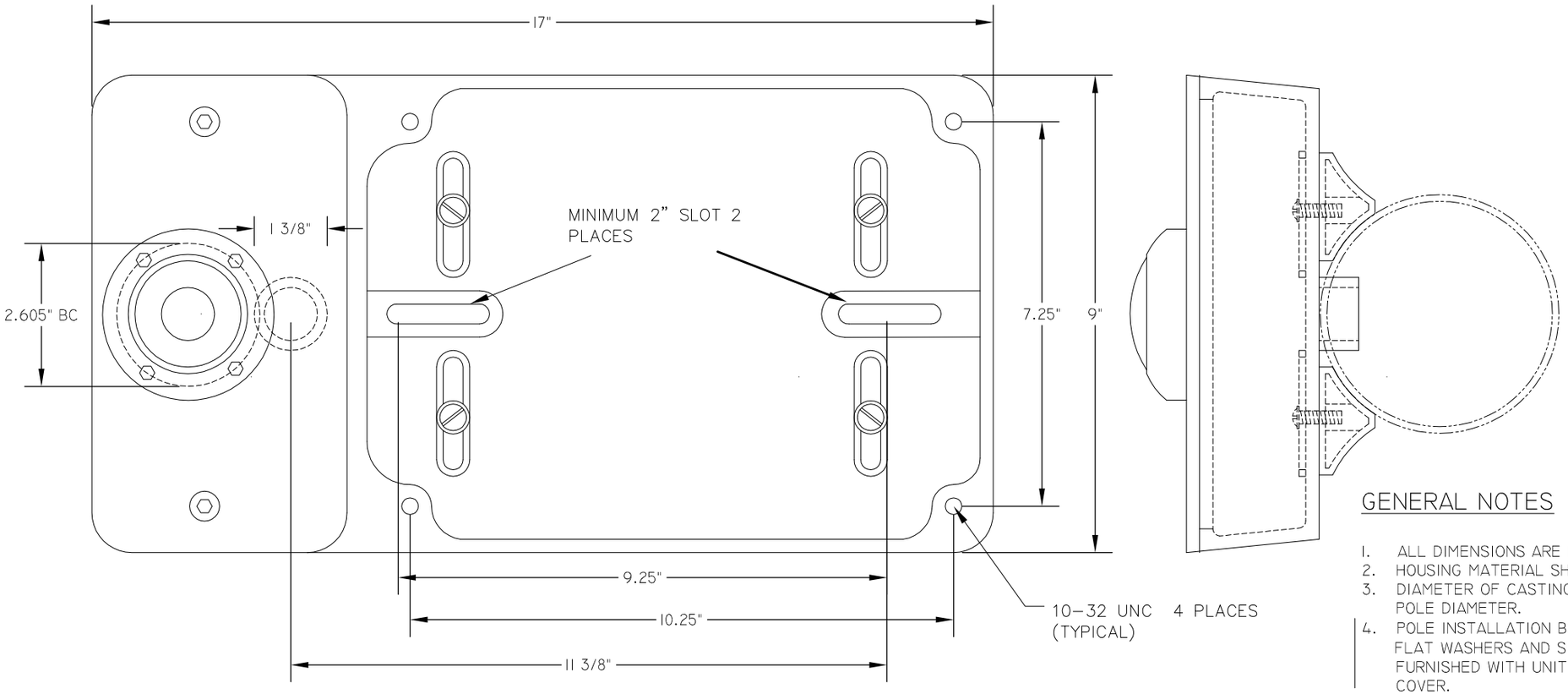

GENERAL NOTES

1. ALL DIMENSIONS ARE IN INCHES.
2. HOUSING MATERIAL SHALL BE ALUMINUM ALLOY.
3. DIAMETER OF CASTING BACK TO CORRESPOND WITH POLE DIAMETER.
4. POLE INSTALLATION BOLTS (2 EACH, BRASS 1/4"-20 x 1), FLAT WASHERS AND SIGN SCREWS SHALL BE FURNISHED WITH UNIT AND STORED INSIDE ADA COVER.
5. BUTTON DOOR MUST BE MACHINED TO ACCEPT A STANDARD BUTTON (TO BE PROVIDED BY THE CITY OF MESA), 3" IN DIAMETER, FOUR 8-32 THREADED HOLES, STARTING AT 45 DEGREES FROM THE TOP ON A 2.605" BOLT CIRCLE, AND A 1" HOLE IN THE CENTER FOR THE TERMINAL BLOCK/WIRING TO PASS THROUGH. CAMPBELL 400H (HOUSING) AND CAMPBELL 400P (PUSH BUTTON DOOR) OR EXACT APPROVED EQUILVALENT.
6. PUSH BUTTON COVER SHALL BE RAIN AND DUST PROOF.
7. PAINT SHALL BE AS SHOWN ON COM DETAIL M-90.2.
8. SEE COM DETAIL M-99.01 FOR PUSH BUTTON STATION SIGNS.

NOT TO SCALE

mesa·az

PEDESTRIAN PUSH BUTTON STATION

DETAIL NO.
M-95.06

REV. 12/1/2014

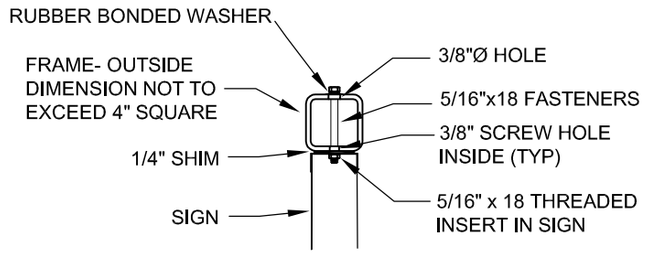

SIGN TO FRAME CONNECTION

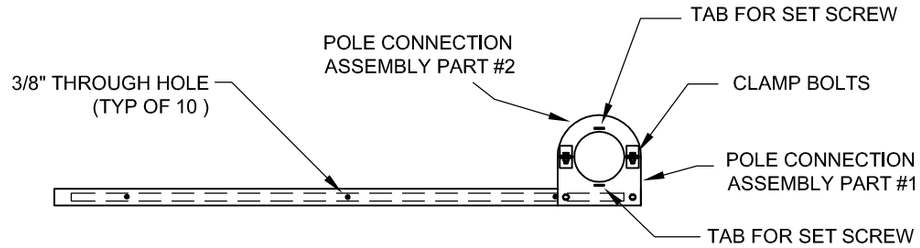

TOP VIEW

SHIM DETAIL

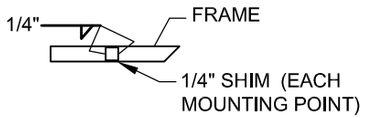

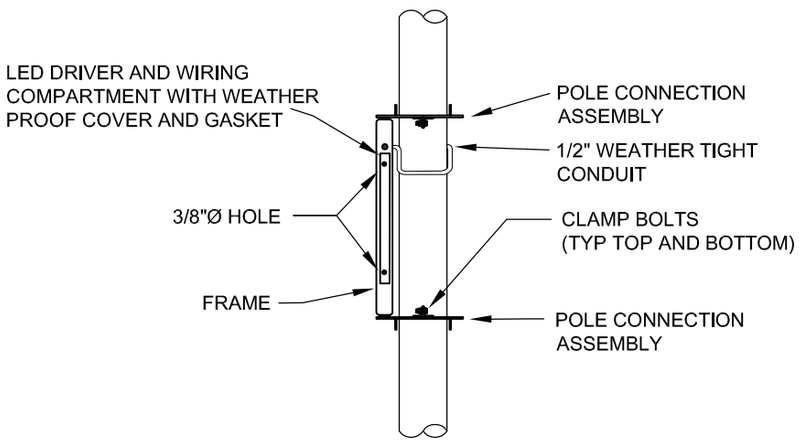

SIDE VIEW

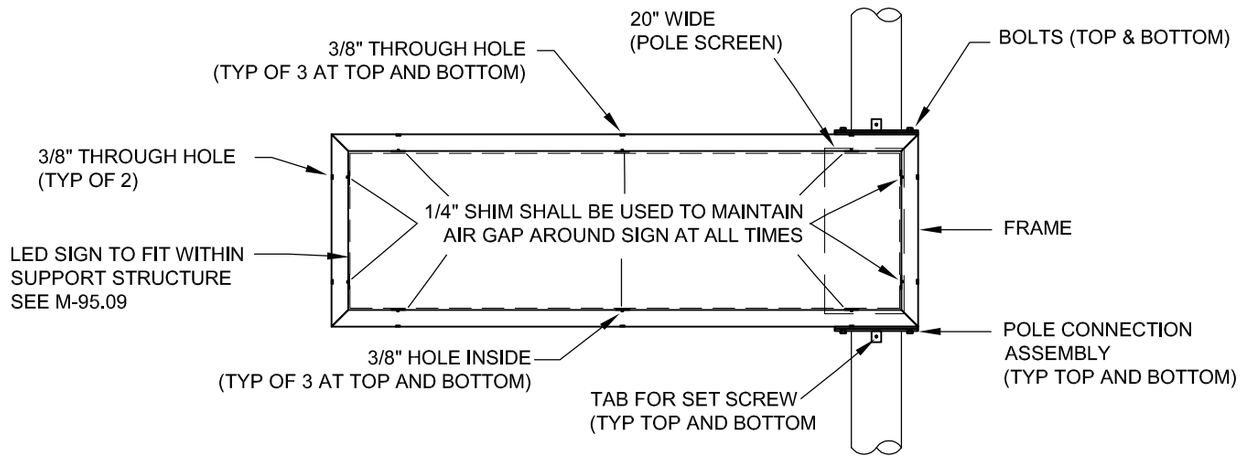

ELEVATION

NOT TO SCALE

mesa·az

LED ILLUMINATED STREET NAME SIGN SUPPORT STRUCTURE

DETAIL NO.
M-95.07

REV. 01/31/2014

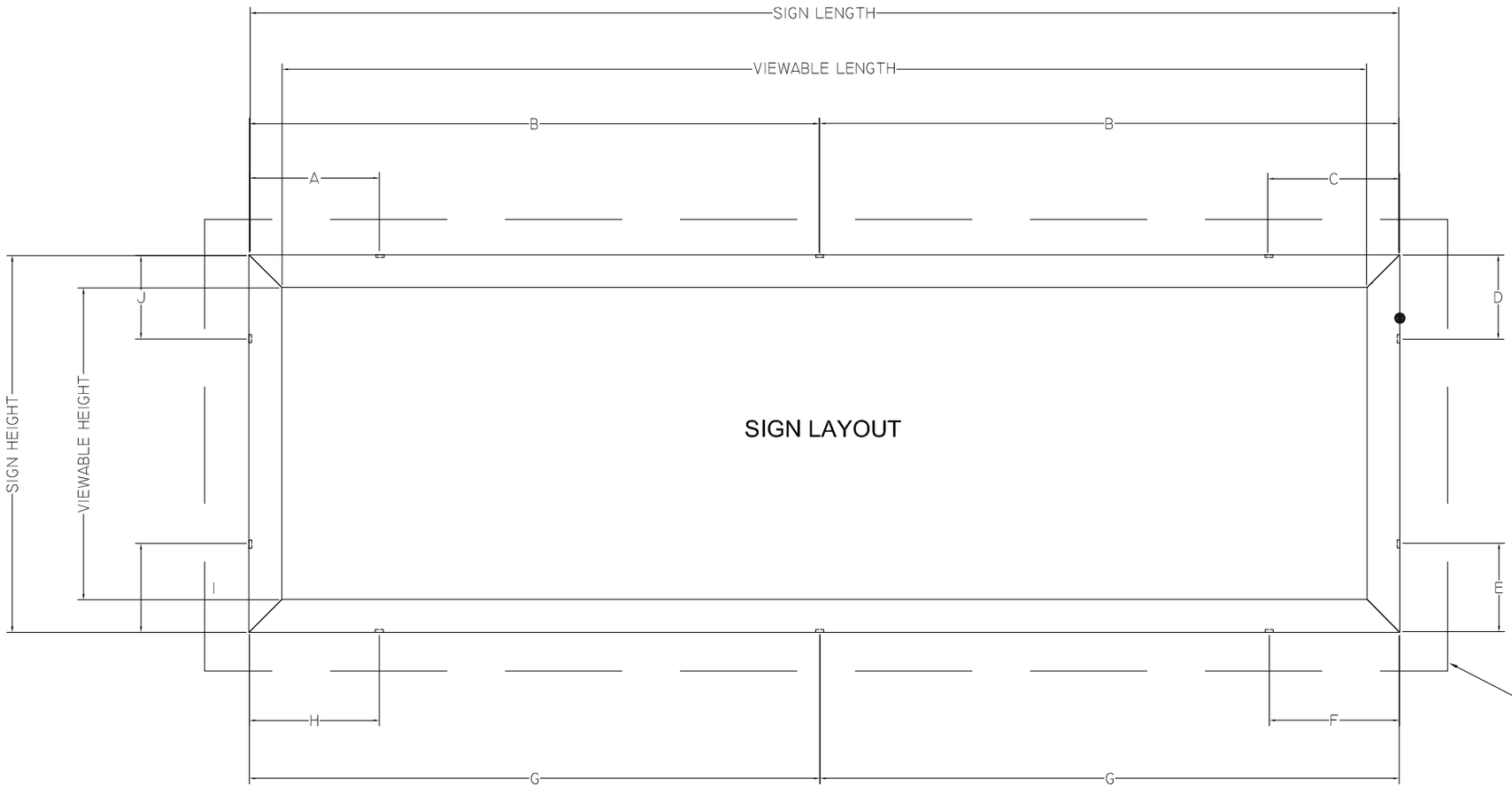

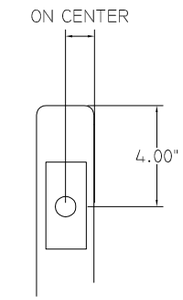

ELECTRICAL WIRE ENTRANCE
END CAP, RIGHT END, ALL SIGNS

SUPPORT STRUCTURE
SEE M-95.07

SIGN SIZE	SIGN DIMENSIONS				CONNECTION POINT DIMENSIONS (MEASURED FROM CORNER)										SIGN WEIGHT (LBS)
	SIGN LENGTH (SL)	VIEWABLE LENGTH (VL)	SIGN HEIGHT (SH)	VIEWABLE HEIGHT (VH)	A	B	C	D	E	F	G	H	I	J	
6'	75.375"	68.10"	28.4375"	24.50"	18.00"	–	18.00"	7.00"	7.00"	18.00"	–	18.00"	7.00"	7.00"	83
8'	99.375"	92.10"	28.4375"	24.50"	18.00"	49.687"	18.00"	7.00"	7.00"	18.00"	49.687"	18.00"	7.00"	7.00"	106
10'	123.375"	116.10"	28.4375"	24.50"	18.00"	61.687"	18.00"	7.00"	7.00"	18.00"	61.687"	18.00"	7.00"	7.00"	129

* VENDOR TO SUBMIT TOTAL WEIGHT OF SIGN ASSEMBLY (NOT TO EXCEED 350 LBS)

NOT TO SCALE

mesa·az

LED ILLUMINATED STREET NAME SIGN DIMENSIONS

DETAIL NO.
M-95.08

REV. 01/31/2014

GENERAL NOTES

1. SIGN LEGEND LAYOUT SHALL BE PER M-21.05, M-21.06, M-21.07 AND M-21.08.

2. APPROVED VENDORS MAY BE FOUND AT:
HTTP://WWW.MESAAZ.GOV/TRANSPORTATION/TRAFFIC_SIGNALS_SPECIFICATIONS.ASPX

CONSTRUCTION

1. THE SUPPORT STRUCTURE FOR THE SIGN MAY BE CONSTRUCTED OF STEEL OR ALUMINUM. STEEL SHALL BE POWDER COATED SILVER/ALUMINUM WITH UV INHIBITORS AND WITH 10 YEAR LONGEVITY FINISH OR APPROVED EQUAL.

2. MOUNTING POINT DIMENSIONS MUST BE STRICTLY ADHERED TO. NO DEVIATION ALLOWED.

3. SUPPORT FRAME MAY NOT EXCEED 4" SQUARE AND SHOULD BE KEPT TO A MINIMUM.

4. SHOP DRAWINGS ARE TO BE SEALED AND SIGNED BY A REGISTERED PROFESSIONAL STRUCTURAL ENGINEER LICENSED IN THE STATE OF ARIZONA UNLESS SEALED SHOP DRAWINGS ARE ON FILE AND VENDOR IS ON APPROVED LIST.

5. MOUNTING HEIGHT TO BE 18'6" TO THE BOTTOM OF THE SIGN, MINIMUM.

WIRING NOTES

1. A BUSHED OPENING MADE ONLY LARGE ENOUGH TO ACCEPT THE WIRING FROM THE ILLUMINATED SIGN SHALL BE PROVIDED, 4" FROM THE INSIDE TOP OF THE FRAME PER THE DRAWING. A WEATHERPROOF COVER AND GASKET SHALL BE PROVIDED ON THE SIDE OF THE SIGN FRAME AND TO HOUSE THE LED DRIVERS AND FOR SPLICING. A 1/2" NPT THREADED HOLE SHALL BE PROVIDED ON THE BACK OF THE FRAME TO ATTACH 1/2" SEAL TIGHT CONDUIT FROM THE FRAME STRUCTURE AND INTO A 1/2" NPT THREADED HOLE IN THE POLE. 90 DEGREE WEATHER TIGHT CONNECTORS SHALL BE USED.

2. WIRING FROM THE TERMINAL COMPARTMENT ON THE SIDE OF THE SIGN TO THE FUSE HOLDER IN THE PULL BOX SHALL BE #12 STRANDED THHN/THWN BLACK, WHITE AND GREEN. A BUCHANNAN MODEL 85U FUSE HOLDER WITH A 3 AMP FUSE SHALL BE INSTALLED IN THE PULL BOX.

3. THE ILLUMINATED SIGN LED POWER SUPPLY SHALL BE PHILLIPS/ADVANCED CLASS II.

WARRANTY

1. A MANUFACTURERS ID TAG SHALL BE PLACED ON THE LOWER RIGHT CORNER AND ON THE SIDE OF THE SIGN FRAME SUPPORT STRUCTURE. IT SHALL BE MADE OF METAL AND SHALL BE PERMANENTLY ENGRAVED WITH THE MANUFACTURER'S NAME, DATE OF MANUFACTURER, SERIAL NUMBER, VOLTAGE AND AMPERAGE REQUIREMENTS. IT SHALL BE PERMANENTLY ATTACHED.

.

2. THE ILLUMINATED STREET NAME SIGN ASSEMBLY SHALL CARRY A 10 YEAR WARRANTY. SIGN FACES WILL BE WARRANTED AGAINST FADING, CRACKING, BUBBLING, DELAMINATION, DISCOLORATION. SUBSTRATE AND SHEETING MATERIAL MUST BE COMPATIBLE AND BE WARRANTED AGAINST FAILURE.

3. SIGN FACES SHALL BE EVENLY LIT AND MUST BE VISIBLE FROM AT LEAST 400' AWAY. DARK SPOTS CAUSED BY LED FAILURE SHALL BE SERVICED TO ELIMINATE SUCH DARK SPOTS DURING THE WARRANTY PERIOD AT NO CHARGE TO THE CITY.

4. LED DRIVERS SHALL BE WARRANTED FOR 5 YEARS MINIMUM. INSTALLATION DATE MUST BE ON THE DRIVER IN PERMANENT INK.

MATERIALS

1. FOR APPROVED SIGN SHEETING MATERIALS, PLEASE REFER TO THE WEB SITE FOR AN UPDATED MATERIALS LIST AT:
HTTP://WWW.MESAAZ.GOV/TRANSPORTATION/TRAFFIC_SIGNALS_SPECIFICATIONS.ASPX

NOT TO SCALE

mesa·az

LED ILLUMINATED STREET NAME SIGN SUPPORT STRUCTURE
NOTES

DETAIL NO.
M-95.09

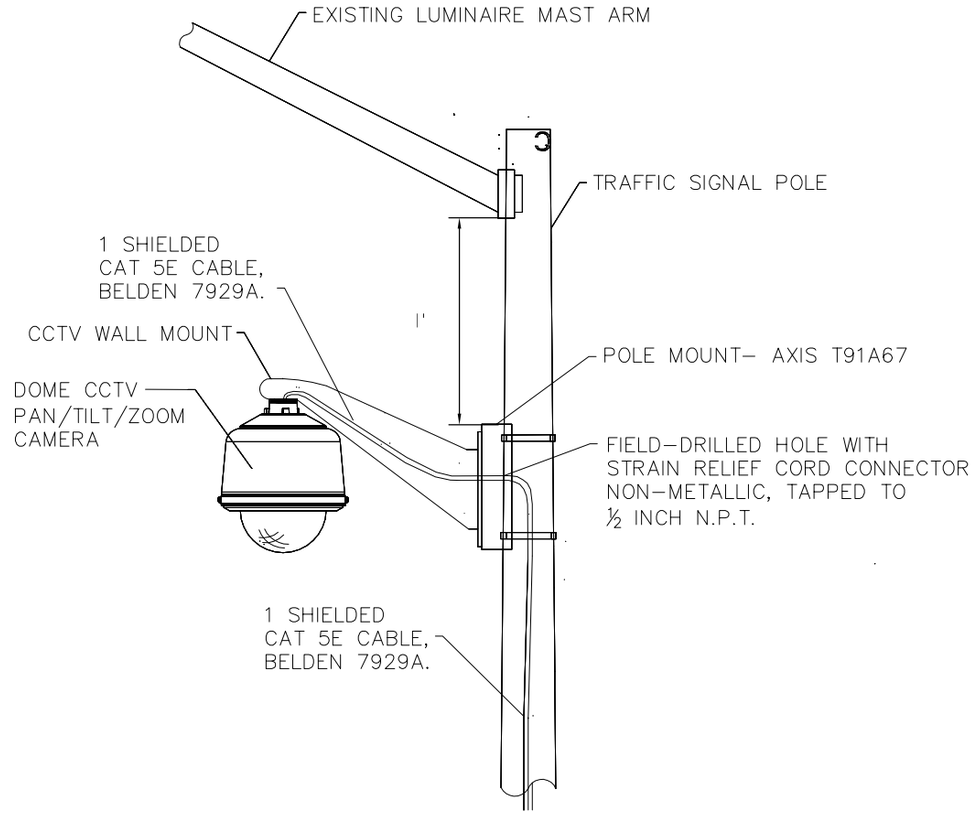

CCTV CAMERA
POLE MOUNTING DETAIL
N.T.S.

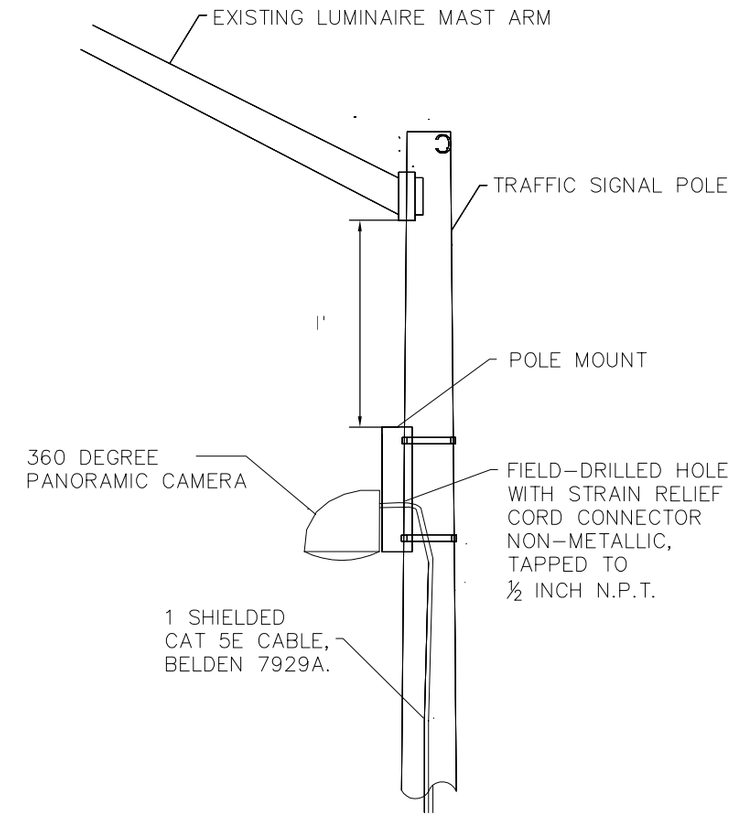

360 DEGREE PANORAMIC CAMERA
POLE MOUNTING DETAIL
N.T.S.

PLAN VIEW
N.T.S.

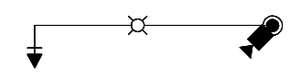

N.T.S.

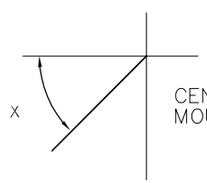

CENTERLINE OF CCTV
MOUNTING ASSEMBLY

X = THE ROTATION OF THE CCTV CAMERA SHALL BE ALIGNED TO POINT AT THE TRAFFIC SIGNAL POLE ON THE DIAGONALLY OPPOSITE CORNER.

GENERAL NOTES:

1. THE CCTV CABLE (SHIELDED CAT 5E) SHALL RUN UNSPLICED FROM THE CCTV TO THE POWER SUPPLY INSTALLED IN THE CABINET. THE CABLE SHALL BE NO LONGER THAN 100M (328 FEET).

2. INSTALLATION SHALL BE ACCORDING TO MANUFACTURER SPECIFICATIONS AND SHALL CARRY A ONE YEAR INSTALLATION WARRANTY OF PARTS AND LABOR.

NOT TO SCALE

mesa·az

CCTV AND 360 DEGREE PANORAMIC INSTALLATION DETAIL

DETAIL NO.
M-95.10

REV. 12/3/2014

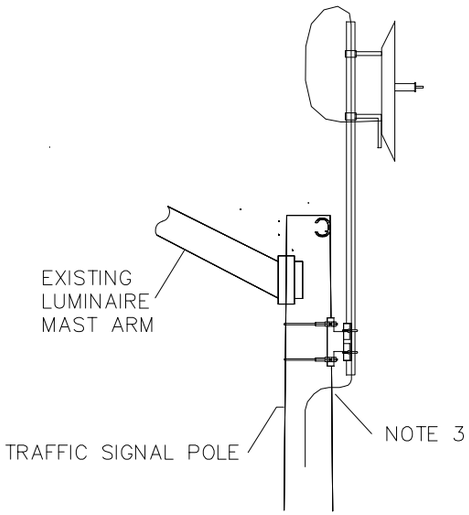

ANTENNA MOUNTING DETAIL
ON PELCO RISER
N.T.S.

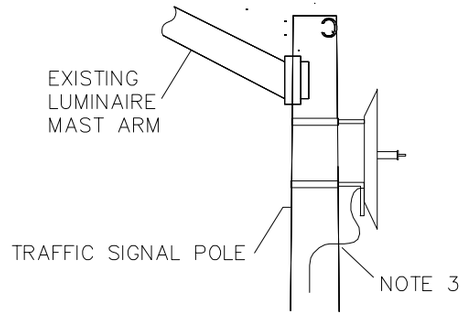

ANTENNA MOUNTING DETAIL
N.T.S.

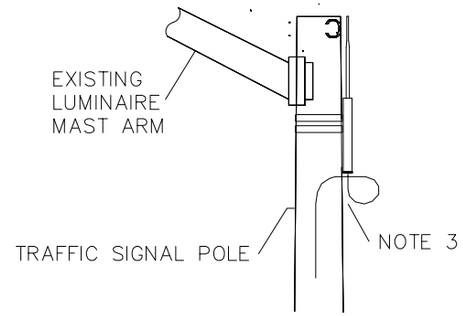

WIRELESS ACCESS POINT
MOUNTING DETAIL
N.T.S.

GENERAL NOTES:

1. THE SHIELDED CAT 5E CABLE SHALL RUN UNSPLICED FROM THE RADIO/ANTENNA TO THE POWER SUPPLY INSTALLED IN THE CABINET. THE CABLE SHALL BE NO LONGER THAN 100M (328 FEET).

2. INSTALLATION SHALL BE ACCORDING TO MANUFACTURER SPECIFICATIONS AND SHALL CARRY A ONE YEAR INSTALLATION WARRANTY OF PARTS AND LABOR.

3. CABLE ENTRIES HOLES SHALL BE FIELD–DRILLED WITH STRAIN RELIEF CORD CONNECTOR NON–METALLIC, TAPPED TO 1/2 INCH N.P.T.

NOT TO SCALE

mesa·az

VARIOUS COMMUNICATION DEVICE INSTALLATION DETAILS

DETAIL NO.
M-95.11

REV. 12/17/2014

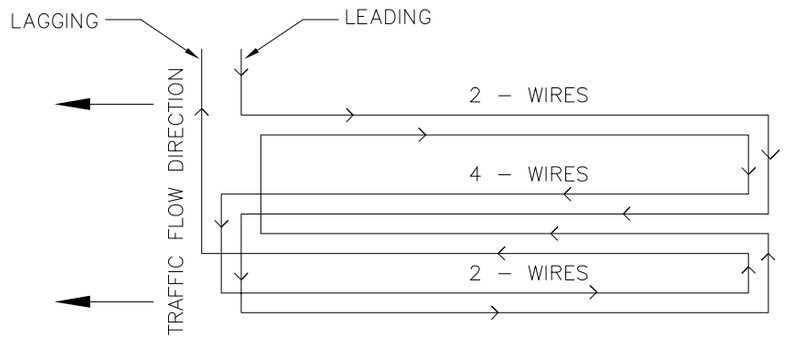

WIRING DIAGRAM FOR QUADRUPOLE LOOP

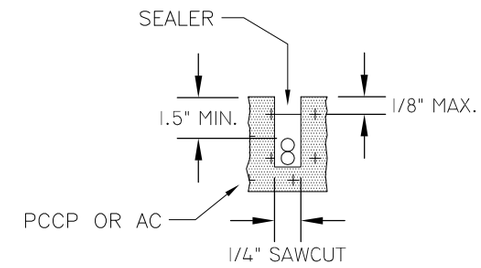

DETAIL 1

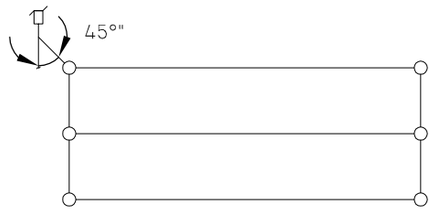

SAW CUT PATTERN FOR QUADRUPOLE LOOP

QUADRUPOLE DETECTOR LOOP PLAN SYMBOL

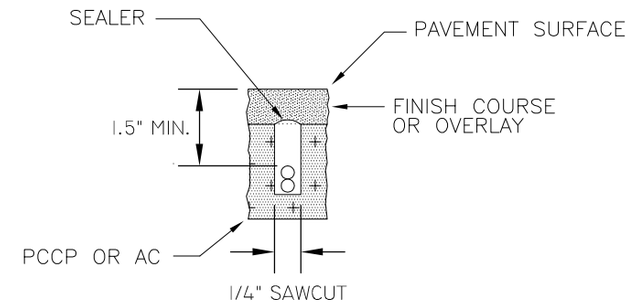

DETAIL 2

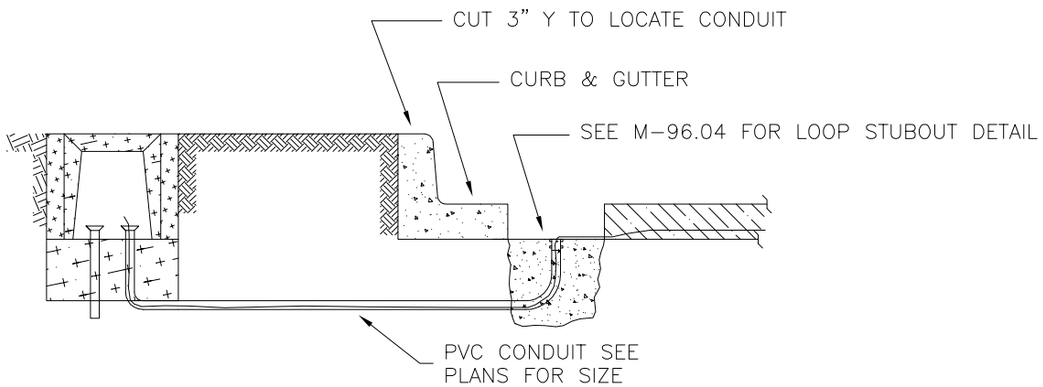

DETAIL "A"

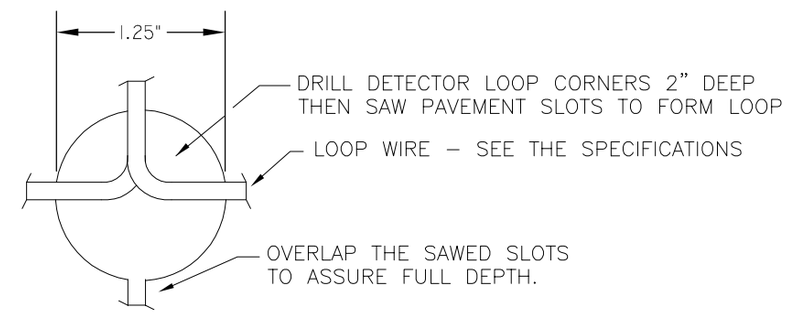

DRILLING DETAIL

mesa·az

DETECTOR LOOP INSTALLATION DETAILS

DETAIL NO.
M-96.01

REV. 12/1/2014

GENERAL NOTES

1. ALL DIMENSIONS ARE IN INCHES.

2. ALL DETECTOR LOOPS SHALL BE INSTALLED AS SHOWN ON THE PROJECT PLANS, CITY OF MESA STANDARD DRAWINGS, OR AS DIRECTED BY THE ENGINEER.

3. ANY DETECTOR LOOP THAT DOES NOT MEET THE ADOT FIELD TEST REQUIREMENT (ADOT 735-3.01 (E)), OR CANNOT BE TUNED TO THE ENGINEER'S SATISFACTION SHALL BE REPLACED BY THE CONTRACTOR AT NO COST TO THE CITY.

4. ON ALL PROJECTS WHERE NEW PAVEMENT IS TO BE INSTALLED, THE DETECTOR LOOPS SHALL BE INSTALLED IN THE BASE COURSE.

5. ALL SAW CUTS REQUIRE 1 1/2" COVER MINIMUM.

6. CITY OF MESA WILL ACCEPT EITHER CORE DRILL OR 45 DEGREE SAW CUT CORNERS.

7. BLOW OUT ALL SAW CUTS BEFORE INSTALLING THE LOOP WIRE. AFTER BLOWING OUT SAW CUTS, CLEAN SILT FROM ROADWAY SURFACE SO THAT NO LAYER OF DEBRIS EXISTS AND ALL PAINTED LANE LINES ARE CLEARLY VISIBLE.

8. ALL DETECTOR LOOPS SHALL BE GIVEN A CONTINUITY AND INSULATION TEST BY THE CONTRACTOR BEFORE AND AFTER PLACING THE FINAL PAVING OR PLACING THE SEALER IN THE SAW CUTS.

9. LOOP WIRE USED IN THE ROADWAY DETECTION SHALL BE IMSA SPECIFICATION #51-5-1984. THE ENCASING TUBE COLOR SHALL BE ORANGE.

10. NUMBER OF LOOP TURNS SHALL BE AS SHOWN UNLESS OTHERWISE SPECIFIED.

11. ASPHALT SAWCUTS SHALL BE SEALED (FILLED) WITH 3M LOOP SEALANT, HOT APPLIED RUBBERIZED SEALANT, OR BREWER COTE (INDUCTIVE COLD POUR, SINGLE COMPONENT LOOP SEALANT) TO 1/8" BELOW PAVEMENT SURFACE.

12. CONCRETE SAWCUTS SHALL BE SEALED (FILLED) WITH 3M BONDO #575 OR #577 LOOP SEALANT, TO 1/8" BELOW CONCRETE SURFACE.

13. ALL LEAD-IN CABLE IS TO BE PLACED IN CONDUIT (LOOP STUB OUTS) TO CROSS UNDER CURB AND GUTTER TO PULL BOX. CONDUIT IS TO BE 2" SCHEDULE 40 PVC.

14. ALL LOOP WIRE SHALL BE TWISTED AT THE RATE OF TWO TURNS PER FOOT FROM THE CORNER OF THE LOOP INTO THE PULL BOX.

15. LOOP STUB OUT HOLE AT GUTTER LIP IS TO BE FILLED AS SHOWN ON COM DETAIL M-96.04.

16. THE LEADING WIRE FOR EACH LOOP SHALL BE TAGGED WITH WHITE TAPE TO DIFFERENTIATE BETWEEN THE LEADING AND LAGGING END OF THE WIRE.

17. WHEN HOOKING UP MULTIPLE LOOPS TO THE SAME PHASE, THE LEADING WIRE FROM ONE LOOP SHALL BE CONNECTED TO THE NEXT LANE'S LAGGING WIRE.

18. WHEN MORE THAN ONE LOOP IS INSTALLED IN THE SAME DIRECTION, LEAD IN WIRES SHALL BE IDENTIFIED IN THE PULL BOX AS FOLLOWS: CURB TO MEDIAN;
    FRONT TO BACK
    - 1 BLACK TAPE = CURB LANE
    - 2 BLACK TAPES = MIDDLE LANE(S)
    - 3 BLACK TAPES = LEFT THRU LANE
    - 4 BLACK TAPES = FRONT 6' x 20' LOOP
    - 5 BLACK TAPES = MIDDLE 6' X 20' LOOP
    - 6 BLACK TAPES = BACK 6' X 20' LOOP

19. DETAIL 1 SHOWS INSTALLATION IN EXISTING PAVEMENT AND DETAIL 2 SHOWS INSTALLATION IN BASE COURSE.

20. WITHIN 3 DAYS OF COMPLETION OF DETECTOR LOOP INSTALLATION, THE CONTRACTOR SHALL SCHEDULE FINAL FIELD TEST WITH THE TRAFFIC SIGNAL INSPECTOR. UPON PASSING FINAL FIELD TEST, DETECTOR LOOPS SHALL BE CONNECTED AND MADE TO OPERATE BY THE CONTRACTOR.

mesa·az

DETECTOR LOOP INSTALLATION NOTES

DETAIL NO.
M-96.02

REV. 01/31/2014

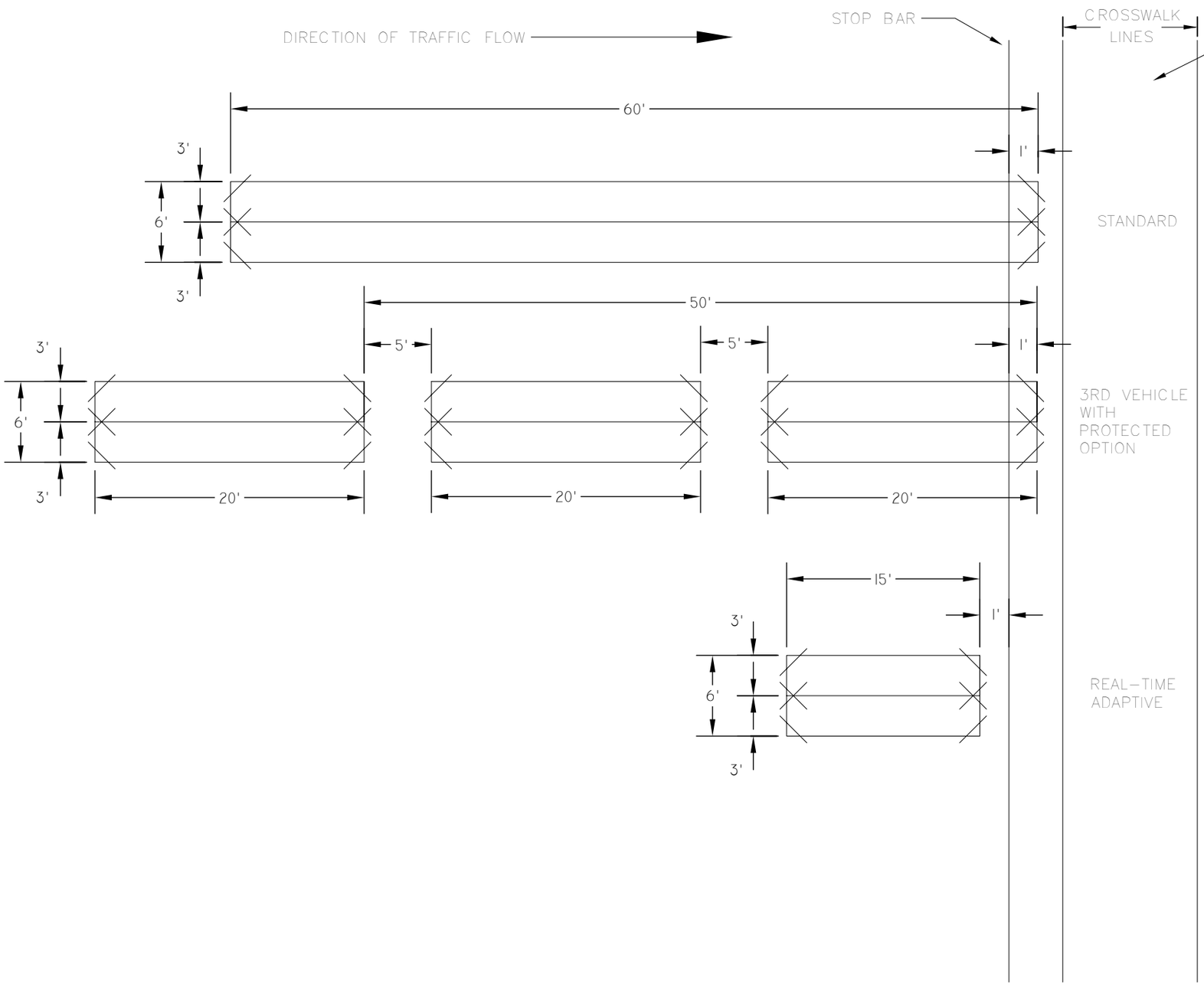

GENERAL NOTES

1. ALL DIMENSIONS ARE IN FEET.
2. VEHICLE DETECTOR LOOP(S) SHALL BE LOCATED IN THE CENTER OF THE TRAVEL LANE UNLESS OTHERWISE NOTED ON PLANS.
3. BICYCLE DETECTOR LOOP(S) SHALL BE LOCATED IN THE CENTER OF THE BICYCLE LANE UNLESS OTHERWISE NOTED ON PLANS.
4. BICYCLE DETECTOR LOOP CORNERS SHALL BE CORE DRILLED.
5. THE CONTRACTOR IS RESPONSIBLE FOR THE LAYOUT OF THE LOOPS. LAYOUT SHALL BE APPROVED BY THE TRAFFIC SIGNALS GROUP BEFORE SAW CUTTING AND PLACEMENT OF THE FINAL LIFT.
6. SEE M-96.01 FOR DETECTOR LOOP INSTALLATION DETAILS.

mesa·az

DETECTOR LOOP LAYOUT

DETAIL NO.
M-96.03

REV. 12/18/12

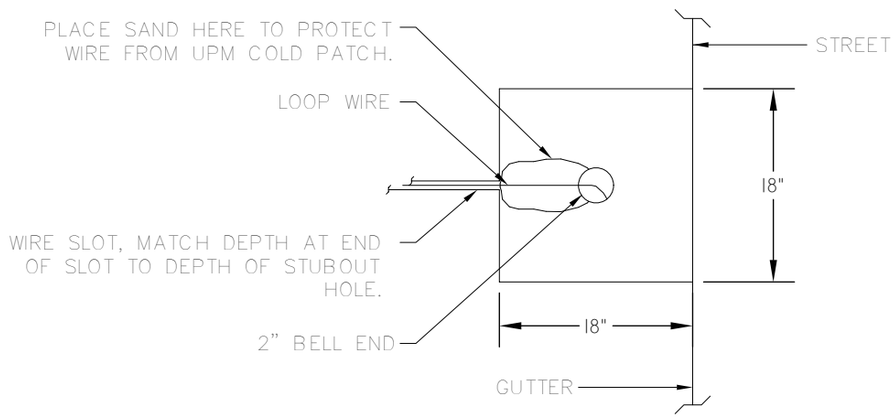

TOP VIEW
NOT TO SCALE

GENERAL NOTES

1. ALL DIMENSIONS ARE IN INCHES.
2. CONDUIT END SHALL BE SEALED WITH DUCT SEAL.
3. COVER EXPOSED WIRE WITH JUST ENOUGH SAND TO PROTECT FROM UPM COLD PATCH.
4. UPM COLD PATCH SHALL BE COMPACTED IN TWO LIFTS WITH A MACHINE PLATE TAMPER. LEAVE UPM 1/4" ABOVE OF ROADWAY SURFACE.
5. EXCAVATION SHALL BE FILLED WITH "SPEED CRETE." NO OTHER BACKFILL MATERIAL SHALL BE USED.

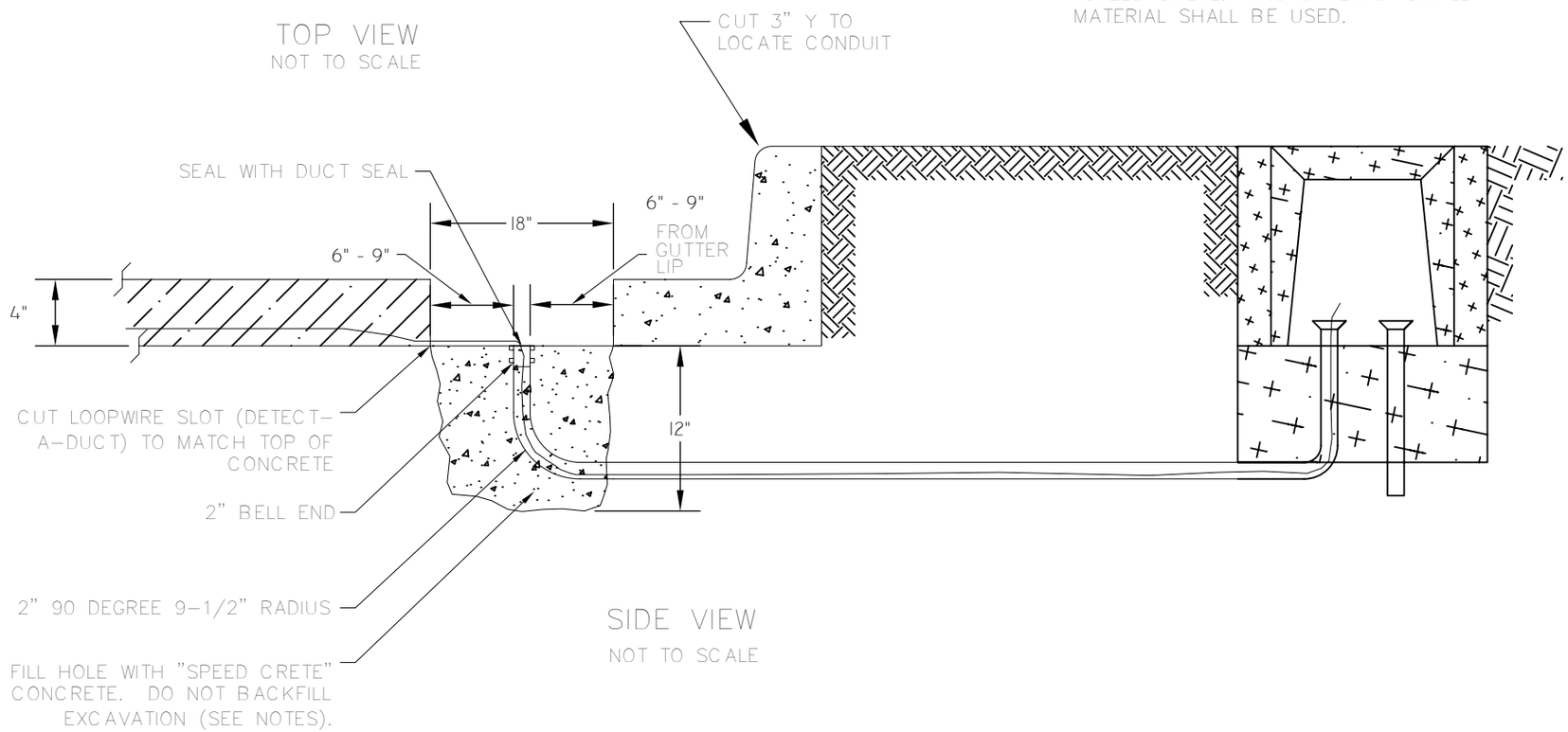

SIDE VIEW
NOT TO SCALE

mesa·az

DETECTOR LOOP STUBOUT

DETAIL NO.
M-96.04

REV. 12/18/12

GENERAL NOTES

1. VIDEO DETECTION SYSTEM CABLE SHALL BE ATTACHED TO THE STRAIN RELIEF SUPPORT HOOK LOCATED AT THE TOP OF THE POLE (INSIDE). CABLE SHALL BE SUPPORTED WITH FACTORY CABLE STRAIN RELIEF DEVICE.

2. VDS-CABLE SHALL BE OF 1-PIECE AND EXTEND FROM THE CAMERA TO THE HAND HOLE, AND A DRIP LOOP SHALL BE FORMED AT THE BASE OF THE CAMERA.

3. VDC INSTALL NEEDS TO BE APPROVED BY THE ITS/TRAFFIC SIGNAL GROUP PRIOR TO INSTALLING.

4. MOUNTING BRACKET SUPPLIED BY VIDEO DETECTION CAMERA MANUFACTURER.

5. CAMERA MOUNTING LOCATION TO BE DETERMINED BY INSPECTOR.

6. SPLICES SHALL BE MADE WITH 3M SCOTCH LOCK 314 INSULATION DISPLACEMENT CONNECTORS.

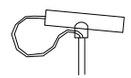

MAXIMUM 12" DRIP LOOP

RUBBER GROMMET

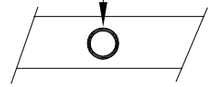

DRILL 3/4" HOLE IN TOP OF ARM.

TYPICAL VIDEO DETECTION CAMERA INSTALLATION

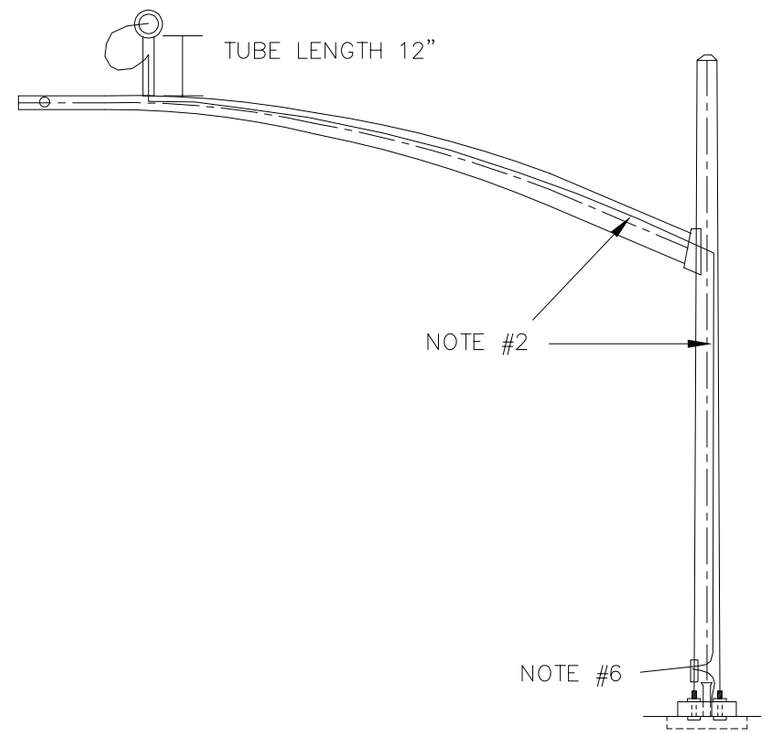

VIDEO DETECTION CAMERA INSTALLATION

DETAIL NO.
M-96.05

REV. 12/1/2014

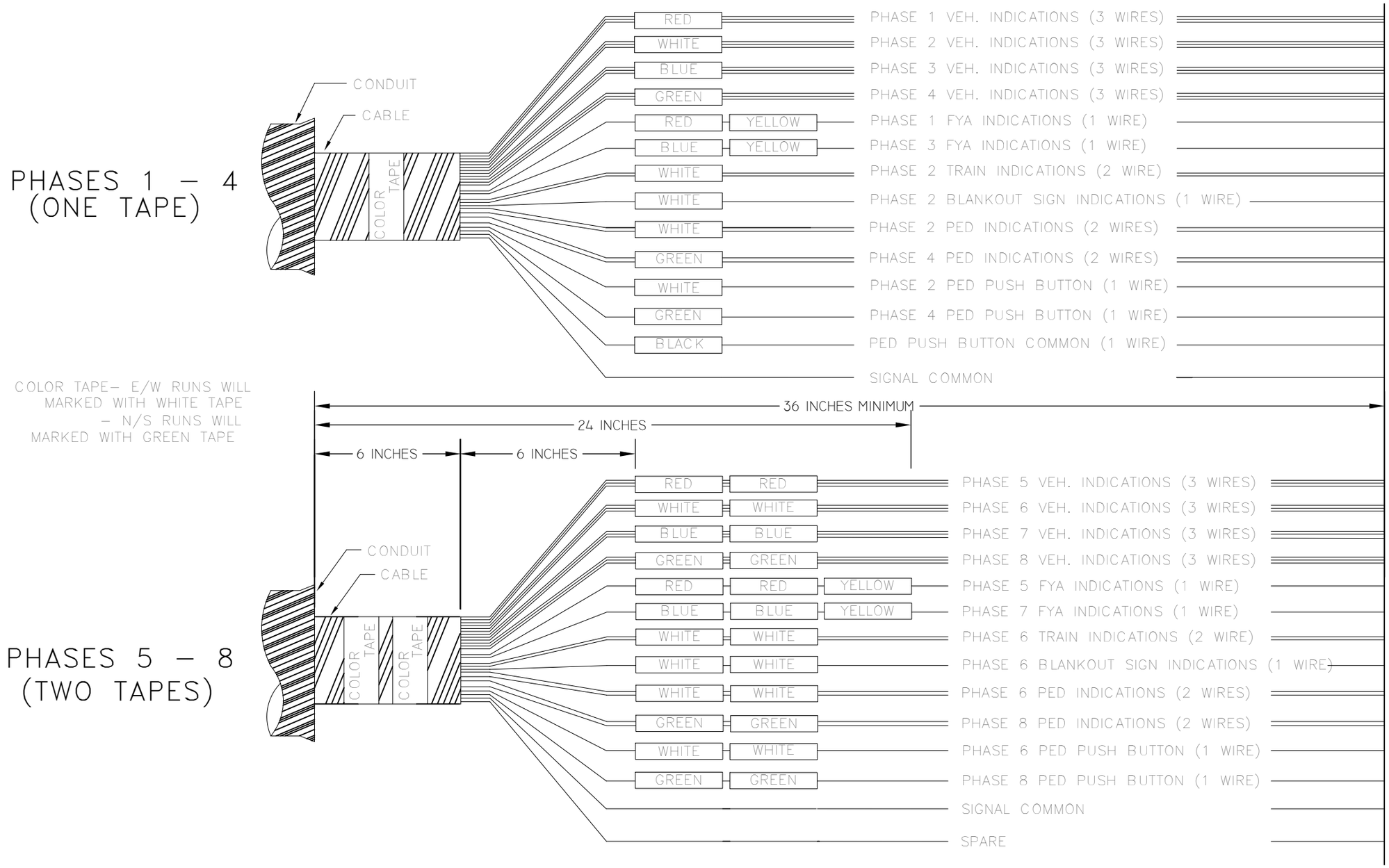

mesa·az

25 CONDUCTOR CABLE ID CODING

DETAIL NO.
M-97.01

REV. 12/19/12

GENERAL NOTES

1. IN CIRCUITS WHERE THE VOLTAGE DOES NOT EXCEED 600 VOLTS AC, SPLICES SHALL BE MADE UTILIZING APPROVED WING NUT WIRE CONNECTORS. SOLDERED CONNECTION SHALL NOT BE PERMITTED THE INSULATION FOR THE SPLICE SHALL CONSIST OF BLACK 3M SCOTCH 33+ ELECTRICAL TAPE AND COMPLETE SUBMERSION IN "SCOTCH KOTE".

2. ALL ELECTRIC SERVICE SPLICES IN PULL BOXES SHALL BE MADE USING HOMAC "FLOOD SEAL" RUBBERIZED ALUMINUM BAR SPLICE KIT PART #RAB4C OR APPROVED EQUAL.

3. IMSA CABLE FOR EACH MAST ARM MOUNTED SIGNAL HEAD SHALL BE CONTINUOUS WITHOUT SPLICING FROM THE TERMINAL BLOCKS IN THE MAST ARM HEAD TO THE PULL BOX AT THE BASE OF THE POLE.

4. ALL CONDUCTORS IN PULL BOXES AND CONTROLLER CABINETS SHALL BE TAGGED TO IDENTIFY THEIR PHASE NUMBER WITH COLOR CODED MARKING TAPE AS PER CITY OF MESA PHASING CODES (DRAWINGS M-97.01, M-97.02, M-97.03, M-97.04, M-97.05 AND 97.06). EACH TAPE SHALL BE WRAPPED AROUND THE APPROPRIATE CONDUCTORS FOUR (4) TIMES [FOR VEHICLE INDICATION, PED INDICATION, AND PED PUSH BUTTON STATION WIRING TYPES AND COLOR CODES (FROM PULLBOX TO POLE) REFER TO ADOT STANDARD SPECIFICATION "CONDUCTOR TABLE" ADOT 732-2.01(A)].

5. ALL SPARES IN THE IMSA CABLE SHALL BE TAPED INDIVIDUALLY WITH BLACK VINYL ELECTRICAL TAPE, SKOTCH COATED AND COILED UP IN THE BOTTOM OF THE PULL BOX.

6. EACH SIGNAL MAST ARM PLUMBIZER SHALL HAVE A MINIMUM OF EIGHTEEN (18) INCHES OF WIRE EXTENDING OUT TO ALLOW FOR CONNECTING IN THE SIGNAL HEAD.

7. ALL END TENONS ON MAST ARMS SHALL BE WIRED FOR PROTECTED/PERMITTED OPERATION. ALL UNUSED TENONS SHALL BE WIRED FOR FUTURE USE AND CAPPED AFTER THE WIRES ARE SECURED IN THE TENON BY THE SAFETY BOLT.

8. ALL MAST ARM HEAD WIRING SHALL BE TAGGED IN THE PULL BOX AS FOLLOWS:
   OUTSIDE HEAD = 1 YELLOW TAPE
   MIDDLE HEAD = 2 YELLOW TAPES
   INSIDE HEAD = 3 YELLOW TAPES

9. STREETLIGHT LUMINAIRES ON SIGNAL POLES SHALL BE WIRED PER CITY OF MESA STANDARD DETAILS.

10. STREETLIGHT CIRCUIT WIRING SHALL BE #10 AWG, XHHW STRANDED BLACK IN MAIN CONDUIT RUNS, WITH THE NEUTRAL IDENTIFIED WITH WHITE MARKING TAPE ON THE ENDS. STREETLIGHTS CIRCUITS SHALL BE TAPED TOGETHER WITH BLACK TAPE TO KEEP THEM SEPERATE FROM THE TRAFFIC SIGNAL CIRCUITS.

11. IISNS CIRCUIT WIRING SHALL BE TAPED TOGETHER WITH ORANGE TAPE TO KEEP SEPARATE FROM THE TRAFFIC SIGNAL CIRCUITS.

12. IN ALL TRAFFIC SIGNAL CONDUITS A GREEN #8 THHN/THWN STRANDED COPPER BOND WIRE SHALL BE USED.

13. ALL ELECTRICAL BLACK AND COLORED TAPE SHALL BE SCOTCH 33+.

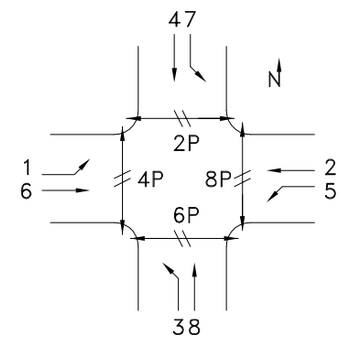

STANDARD 8 PHASE LAYOUT

SEE PLANS FOR CORRECT PHASING SEQUENCE

mesa·az

GENERAL CABLE AND WIRING NOTES

DETAIL NO.
M-97.02

REV. 12/1/2014

CABLE #1, ONE TAPE WRAP
CONDUCTORS WITHIN CABLE PHASE CODING

VEHICULAR INDICATIONS

PHASE	TAPE ID COLORS	INTERVAL	WIRE COLORS	INDICATIONS
1	1 RED	EBLT	RED, ORANGE, GREEN	RED, YELLOW, GREEN
2	1 WHITE	WB	RED W/BLACK, ORANGE W/BLACK, GREEN W/BLACK	RED, YELLOW, GREEN
3	1 BLUE	NBLT	RED W/WHITE, BLUE W/WHITE, GREEN W/WHITE	RED, YELLOW, GREEN
4	1 GREEN	SB	RED W/GREEN, ORANGE W/RED, BLUE W/RED	RED, YELLOW, GREEN
1 FYA	1 RED, 1 YELLOW	EBLT	YELLOW W/RED	FYA PHASE 1
3 FYA	1 BLUE, 1 YELLOW	NBLT	YELLOW W/BLUE	FYA PHASE 3

LRT INDICATIONS

PHASE	TAPE ID COLORS	INTERVAL	WIRE COLORS	INDICATIONS
2 TRAIN BAR	1 WHITE	WB	BROWN, BROWN W/WHITE	HORZ BAR, VERT
2 B.O. SIGN	1 WHITE	WB	ORANGE W/ GREEN	BLANKOUT SIGN

PEDESTRIAN INDICATIONS

PHASE	TAPE ID COLORS	WIRE COLORS	INDICATIONS
2 PED	1 WHITE	BLACK, BLUE	DON'T WALK, WALK
4 PED	1 GREEN	BLACK W/WHITE, BLUE W/BLACK	DON'T WALK, WALK

PEDESTRIAN PUSH BUTTONS

PHASE	TAPE ID COLORS	WIRE COLOR1
2 PUSH BUTTON	1 WHITE	WHITE W/ RED
4 PUSH BUTTON	1 GREEN	BLACK W/ RED
PUSH BUTTON COMMON	1 BLACK	WHITE W/ BLACK
SIGNAL COMMON		WHITE

MARKING TAPE PER PHASES Ø1 = 1 RED TAPE
Ø2 = 1 WHITE TAPE
Ø3 = 1 BLUE TAPE
Ø4 = 1 GREEN TAPE

mesa·az

25 CONDUCTOR CABLE #1

DETAIL NO.
M-97.03

REV. 12/19/12

CABLE #2, TWO TAPE WRAPS
CONDUCTORS WITHIN CABLE PHASE CODING

VEHICULAR INDICATIONS

PHASE	TAPE ID COLORS	INTERVAL	WIRE COLORS	INDICATIONS
5	2 RED	WBLT	RED, ORANGE, GREEN	RED, YELLOW, GREEN
6	2 WHITE	EB	RED W/BLACK, ORANGE W/BLACK, GREEN W/BLACK	RED, YELLOW, GREEN
7	2 BLUE	SBLT	RED W/WHITE, BLUE W/WHITE, GREEN W/WHITE	RED, YELLOW, GREEN
8	2 GREEN	NB	RED W/GREEN, ORANGE W/RED, BLUE W/RED	RED, YELLOW, GREEN
5 FYA	2 RED, 1 YELLOW	WBLT	YELLOW W/RED	FYA PHASE 5
7 FYA	2 BLUE, 1 YELLOW	SBLT	YELLOW W/BLUE	FYA PHASE 7

LRT INDICATIONS

PHASE	TAPE ID COLORS	INTERVAL	WIRE COLORS	INDICATIONS
6 TRAIN	2 WHITE	EB	BROWN, BROWN W/WHITE	HORZ BAR, VERT BAR
6 B.O. SIGN	2 WHITE	EB	ORANGE W/ GREEN	BLANKOUT SIGN

PEDESTRIAN INDICATIONS

PHASE	TAPE ID COLORS	WIRE COLORS	INDICATIONS
6 PED	2 WHITE	BLACK, BLUE	DON'T WALK, WALK
8 PED	2 GREEN	BLACK W/WHITE, BLUE W/BLACK	DON'T WALK, WALK

PEDESTRIAN PUSH BUTTONS

PHASE	TAPE ID COLORS	WIRE COLORS
6 PUSH BUTTON	2 WHITE	WHITE W/ RED
8 PUSH BUTTON	2 GREEN	BLACK W/ RED
SIGNAL COMMON		WHITE
SPARE		WHITE W/ BLACK

MARKING TAPE PER PHASES Ø5 = 2 RED TAPE
Ø6 = 2 WHITE TAPE
Ø7 = 2 BLUE TAPE
Ø8 = 2 GREEN TAPE

mesa·az

25 CONDUCTOR CABLE #2

DETAIL NO.
M-97.04

REV. 12/19/12

GENERAL NOTES

1. IN CIRCUITS WHERE THE VOLTAGE DOES NOT EXCEED 600 VOLTS AC, THE SPLICES SHALL BE MADE UTILIZING APPROVED WING NUT WIRE CONNECTORS. SOLDERED CONNECTIONS SHALL NOT BE PERMITTED. THE INSULATION FOR THE SPLICE SHALL CONSIST OF BLACK 3M SCOTCH 33+ ELECTRICAL TAPE AND COMPLETE SUBMERSION IN "SCOTCH KOTE".

2. ALL ELECTRIC SERVICE SPLICES IN PULL BOXES SHALL BE MADE USING A HOMAC "FLOOD SEAL" RUBBERIZED ALUMINUM BAR SPLICE KIT PART #RAB4C OR AN APPROVED EQUAL.

3. IMSA CABLE FOR EACH MAST ARM MOUNTED SIGNAL HEAD SHALL BE CONTINUOUS WITHOUT SPLICING FROM THE TERMINAL BLOCKS IN THE MAST ARM HEAD TO THE PULL BOX AT THE BASE OF THE POLE.

4. ALL CONDUCTORS IN PULL BOXES AND CONTROLLER CABINETS SHALL BE TAGGED TO IDENTIFY THEIR PHASE NUMBER WITH COLOR CODED MARKING TAPE AS PER CITY OF MESA PHASING CODES (DRAWINGS M-97.01, M-97.02, M-97.3, M-97.04, M-97.05 AND M-97.06). EACH TAPE SHALL BE WRAPPED AROUND THE APPROPRIATE CONDUCTORS WITH FOUR (4) LAYERS OF TAPE (FOR VEHICLE INDICATION, PED INDICATION, AND PED PUSH BUTTON STATION WIRING TYPES AND COLOR CODES (FROM PULL BOX TO POLE) REFER TO ADOT STANDARD SPECIFICATION "CONDUCTOR TABLE" ADOT 732-2.01(A)).

5. ALL SPARES IN THE IMSA CABLE SHALL BE TAPED INDIVIDUALLY WITH BLACK VINYL ELECTRICAL TAPE, SKOTCH COATED AND COILED UP IN THE BOTTOM OF THE PULL BOX.

6. EACH SIGNAL MAST ARM PLUMBIZER SHALL HAVE A MINIMUM OF EIGHTEEN (18) INCHES OF WIRE EXTENDING OUT TO ALLOW FOR CONNECTING IN THE SIGNAL HEAD.

7. ALL END TENONS ON MAST ARMS SHALL BE WIRED FOR PROTECTED/PERMITTED OPERATION. ALL UNUSED TENONS SHALL BE WIRED FOR FUTURE USE AND CAPPED AFTER THE WIRES ARE SECURED IN THE TENON BY THE SAFETY BOLT.

8. ALL MAST ARM HEAD WIRING SHALL BE TAGGED IN THE PULL BOX AS FOLLOWS:
   OUTSIDE HEAD = 1 YELLOW TAPE
   MIDDLE HEAD = 2 YELLOW TAPES
   INSIDE HEAD = 3 YELLOW TAPES

9. STREETLIGHT LUMINAIRES ON SIGNAL POLES SHALL BE WIRED PER CITY OF MESA STANDARD DETAILS.

10. STREETLIGHT CIRCUIT WIRING SHALL BE #10 AWG, XHHW STRANDED BLACK IN MAIN CONDUIT RUNS, WITH THE NEUTRAL IDENTIFIED WITH WHITE MARKING TAPE ON THE ENDS. TRAY CABLE USED FROM METER PEDESTAL TO THE CLOSEST P.E.C. (PHOTOCELL). STREETLIGHT CIRCUITS SHALL BE TAPED TOGETHER TO KEEP THEM SEPARATE FROM THE TRAFFIC SIGNAL CIRCUITS.

11. IN ALL TRAFFIC SIGNAL CONDUITS A GREEN #8 THHW/THWN STRANDED COPPER BOND WIRE SHALL BE USED.

12. ALL ELECTRICAL BLACK AND COLORED TAPE SHALL BE SCOTCH 33+.

mesa·az

25 CONDUCTOR CABLE #1 & #2 GENERAL NOTES

DETAIL NO.
M-97.05

7 CONDUCTOR, 5 CONDUCTOR, AND 2 CONDUCTOR

OUTSIDE MAST ARM & TYPE "Q" HEADS

7 CONDUCTOR CABLE	
BASIC COLOR	SIGNAL INTERVAL
RED	RED
ORANGE	YELLOW
GREEN	GREEN
BLACK	YELLOW ARROW
BLUE	GREEN ARROW
WHITE	VEHICLE COMMON
WHITE/BLACK	SPARE

TYPE "F" SIGNAL HEADS INSIDE & SIDEMOUNT

5 CONDUCTOR CABLE	
BASIC COLOR	SIGNAL INTERVAL
RED	RED
ORANGE	YELLOW
GREEN	GREEN
WHITE	VEHICLE COMMON
BLACK	SPARE

FLASHING YELLOW HEADS "FY"

7 CONDUCTOR CABLE	
BASIC COLOR	SIGNAL INTERVAL
RED	RED ARROW
ORANGE	YELLOW ARROW
GREEN	GREEN ARROW
BLACK	FL YELLOW ARROW
BLUE	SPARE
WHITE	VEHICLE COMMON
WHITE/BLACK	SPARE

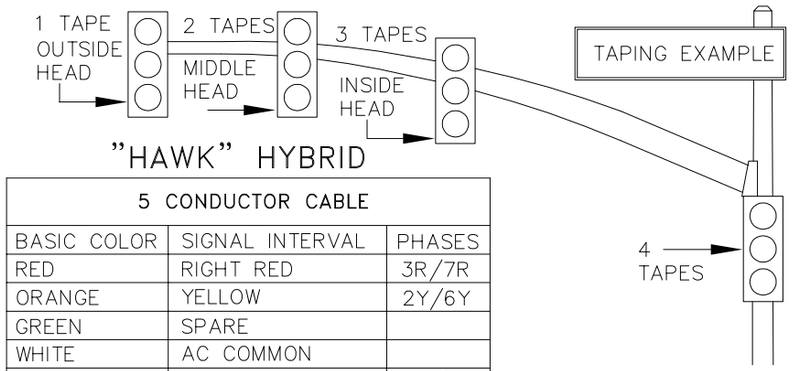

"HAWK" HYBRID

5 CONDUCTOR CABLE		
BASIC COLOR	SIGNAL INTERVAL	PHASES
RED	RIGHT RED	3R/7R
ORANGE	YELLOW	2Y/6Y
GREEN	SPARE	
WHITE	AC COMMON	
BLACK	LEFT RED	2R/6R

PEDESTRIAN HEADS

5 CONDUCTOR CABLE	
BASIC COLOR	SIGNAL INTERVAL
RED	DON'T WALK
ORANGE	SPARE
GREEN	WALK
WHITE	PEDESTRIAN COMMON
BLACK	SPARE

PUSH BUTTON

2 CONDUCTOR CABLE	
BASIC COLOR	PUSH BUTTON STATION
BLACK	PUSH BUTTON
WHITE	PUSH BUTTON COMMON

DOUBLE PEDESTRIAN HEADS

7 CONDUCTOR CABLE		
BASIC COLOR	SIGNAL INTERVAL	PED PHASING
RED	DON'T WALK	4 & 8
ORANGE	SPARE	
GREEN	WALK	4 & 8
BLACK	DON'T WALK	2 & 6
BLUE	WALK	2 & 6
WHITE	COMMON	PED COMMON
WHITE/BLACK	SPARE	

LRT BLANKOUT

5 CONDUCTOR CABLE	
BASIC COLOR	SIGNAL INTERVAL
RED	SPARE
ORANGE	SPARE
GREEN	SPARE
WHITE	NEUTRAL
BLACK	LOAD

LRT TRAIN

5 CONDUCTOR CABLE	
BASIC COLOR	SIGNAL INTERVAL
RED	HORIZONTAL BAR
ORANGE	SPARE
GREEN	VERTICAL BAR
WHITE	NEUTRAL
BLACK	SPARE

DOUBLE LRT TRAIN

7 CONDUCTOR CABLE		
BASIC COLOR	SIGNAL INTERVAL	PHASES
RED	HORIZONTAL BAR	2 / 4
ORANGE	SPARE	
GREEN	VERTICAL BAR	2 / 4
BLACK	HORIZONTAL BAR	6 / 8
BLUE	VERTICAL BAR	6 / 8
WHITE	NEUTRAL	
WHITE/BLACK	SPARE	

ALL CABLES SHALL BE TAGGED AS TO THEIR ASSIGNED PHASE IN THE PULL BOX.

GENERAL NOTES

1. ALL IMSA CABLE IS PULLED CONTINUOUS (NO SPLICING) FROM THE TERMINAL COMPARTMENT IN EACH SIGNAL HEAD, PED HEAD, OR PUSH BUTTON STATION TO THE PULL BOX AT THE BASE OF THE POLE.

2. CABLE SHALL BE UTILIZED AS FOLLOWS:
   - 2 CONDUCTOR = ALL PUSH BUTTON STATIONS
   - 5 CONDUCTOR = ALL 3-SECTION SIGNAL HEADS AND PED HEADS (1 EACH)
   - 7 CONDUCTOR = ALL OUTBOARD MAST ARM AND TYPE "Q" SIGNAL HEADS
   - 7 CONDUCTOR = ALL DOUBLE PEDESTRIAN HEADS

3. IMSA CABLE FOR EACH MAST ARM MOUNTED SIGNAL HEAD SHALL BE CONTINUOUS WITHOUT SPLICING FROM THE TERMINAL BLOCKS IN THE MAST ARM HEAD TO THE PULL BOX AT THE BASE OF THE POLE.

4. YELLOW ID TAPE SHALL BE APPLIED 6" ABOVE PVC END BELLS ON IMSA CABLE JACKET.

5. ALL CABLE SHALL BE TAGGED IN THE PULL BOX WITH YELLOW TAPE AS FOLLOWS:

MAST ARM VEHICLE INDICATIONS

HEAD	CONDUCTORS	TAPE(S)
OUTSIDE	7	1
NEXT INSIDE	5	2
NEXT INSIDE	5	3
NEXT INSIDE	5	4
NEXT INSIDE...	5	5...
ETC.	5	ETC...

POLE MOUNT VEHICLE INDICATIONS

HEAD	TAPE(S)
SAME PHASE AS MAST ARM HEADS	NEXT #
DIFFERENT PHASE FROM MAST ARM	NONE

6. IMSA CABLES FOR PEDESTRIAN HEADS SHALL BE IDENTIFIED IN PULL BOXES USING BROWN TAPE IN ADDITION TO STANDARD PHASE ID TAPING.

mesa·az

CONDUCTORS IN TRAFFIC SIGNAL POLES

DETAIL NO.
M-97.06

REV. 12/2/2014

NOTES

1. ALL DIMENSIONS ARE IN INCHES.
2. MATERIAL SHALL BE 20 GAUGE STEEL WITH PORCELAIN ENAMEL.
3. SIGNS SHALL COMPLY WITH MUTCD SEC. 2B.51

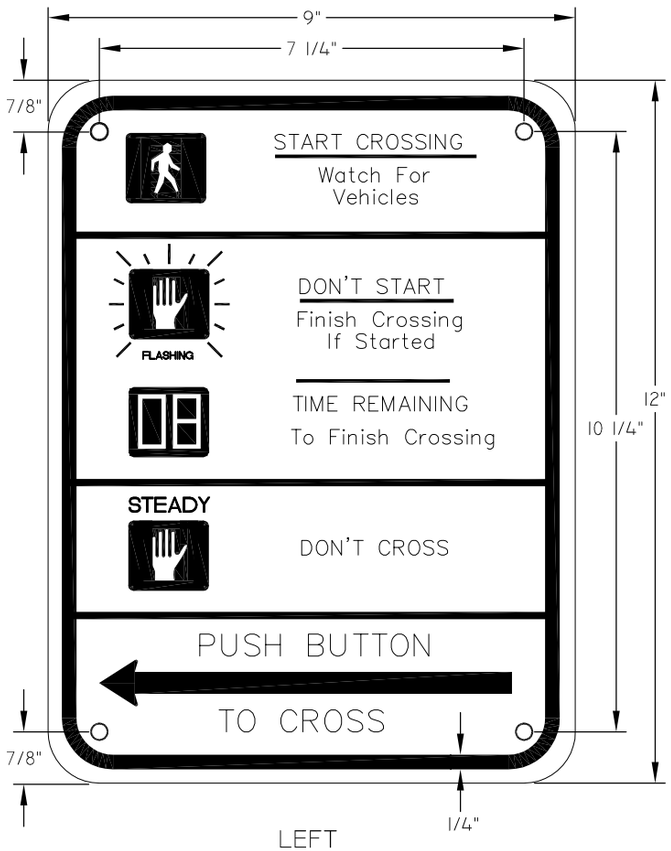

LEFT
R10-3E(L)

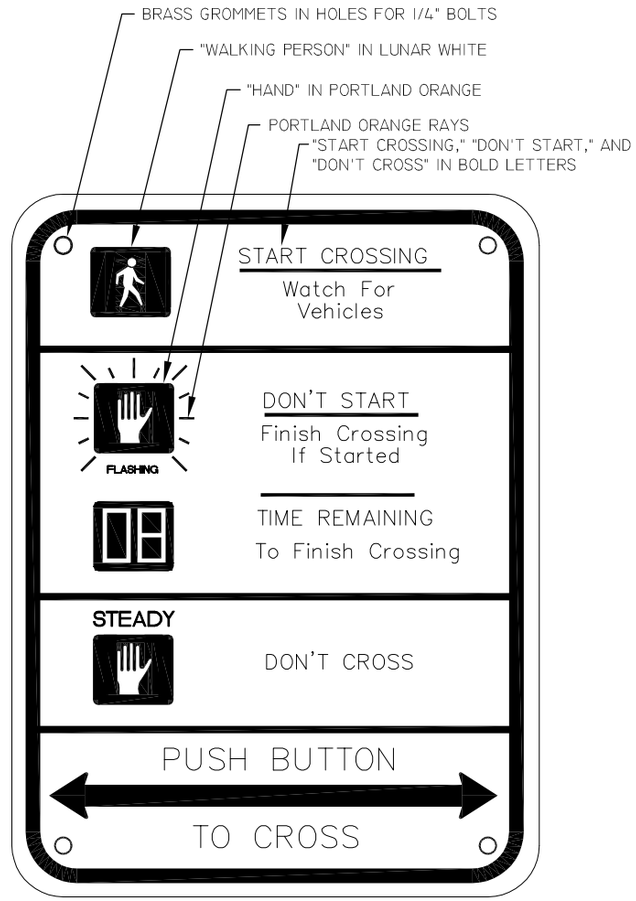

BOTH
R10-3E(B)

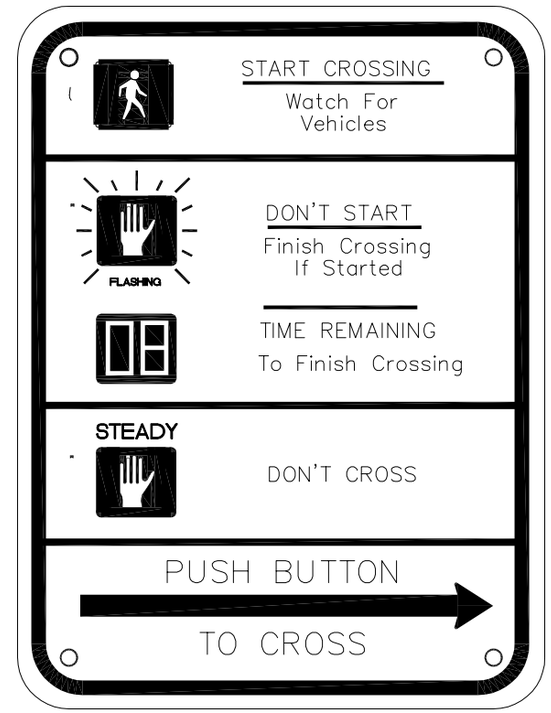

RIGHT
R10-3E(R)

mesa·az

PUSH BUTTON STATION SIGNS

DETAIL NO.
M-99.01

REV. 12/1/2014

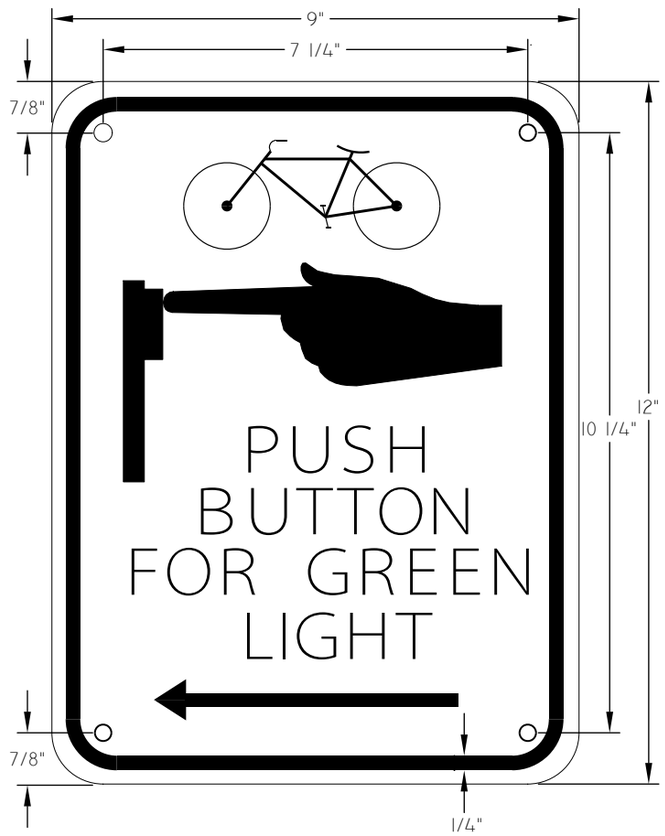

TYPICAL DIMENSIONS
R10-26

NOTES

1. ALL DIMENSIONS ARE IN INCHES.
2. MATERIAL SHALL BE 20 GAUGE STEEL WITH PORCELAIN ENAMEL.

mesa·az

BICYCLE PUSH BUTTON STATION SIGNS

DETAIL NO.
M-99.02

REV. 12/12/12

NOTES

1. BOULDERS TO BE PLACED IN A WAY SO SCARRING DOES NOT OCCUR.
2. BURY LOWER 1/3 OF BOULDER AS NEEDED TO ACHIEVE NATURAL APPEARANCE.
3. GRANITE BOULDER SPECIFICATIONS:
   4'X4'X4' 3.0 TONS (MIN.)
   3'X3'X3' 1.5 TONS
   2'X2'X2' 1.0 TON
4. SEE PLANS FOR BOULDER SIZE AND PLACEMENT.

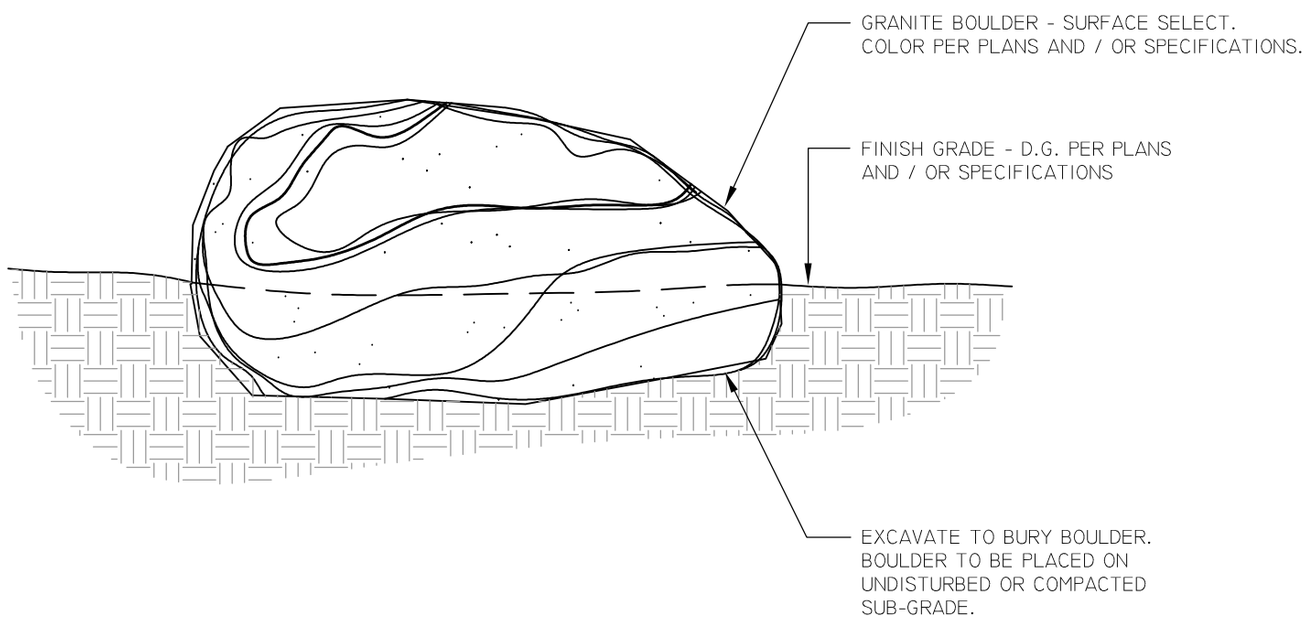

NOT TO SCALE

mesa·az

SURFACE SELECT GRANITE BOULDER

DETAIL NO.
M-102

REV. 02/11/2015

NATIVE PLANTING BACKFILL MIX:	MIX SHALL CONSIST OF 'NATIVE' SITE SOIL (NO CALICHE IN BACKFILL). REMOVE ALL INORGANIC MATERIAL GREATER THAN 1" IN SIZE. SOIL MIX SHALL BE WATER SETTLED WITHOUT POOLING.
AMENDED PLANTING BACKFILL MIX:	MIX SHALL CONSIST OF: 1/2 PART 'NATIVE' SITE SOIL (NO CALICHE IN BACKFILL) & 1/2 PART MULCH (*HUMUS) *NATURAL FERTILE, FRIABLE SOIL THOROUGHLY MIXED PRIOR TO BACKFILLING PIT. REMOVE ALL INORGANIC MATERIAL GREATER THAN 1" IN SIZE. SOIL BACKFILLING SHALL BE ACCOMPLISHED IN 6" LIFTS. EACH LIFT SHALL BE WATER SETTLED WITHOUT POOLING.
FERTILIZER TABLETS:	FERTILIZER TABLETS SHALL BE AGRIFORM OR EQUAL (21 GRAM 20-20-5) SLOW RELEASE. TABLETS SHALL BE PLACED AT 1/2 THE DEPTH OF THE ROOTBALL AT THE FOLLOWING RATES: 1 TABLET PER 1 GALLON CONTAINER 2 TABLETS PER 5 GALLON CONTAINER 3 TABLETS PER 15 GALLON CONTAINER 4 TABLETS PER 24" BOX AND AT A RATE OF 1 TABLET PER EACH ADDITIONAL 6" BOX SIZE. WHEN MULTIPLE QUANTITIES OF TABLETS ARE REQUIRED, THEY SHALL BE EQUALLY SPACED AT THE SPECIFIED DEPTH.

mesa·az

PLANTING NOTES

DETAIL NO.
M-103.01

REV. 01/31/2014

NOTES

1. PLANTS DELIVERED WITH CRACKED OR BROKEN CONTAINERS, NOT ROOTED IN CAN OR ROOT BOUND, WILL BE REJECTED.
2. TREE TRUNK SHALL BE CAPABLE OF MOVEMENT IN ALL DIRECTIONS. COORDINATE WITH COM INSPECTOR.

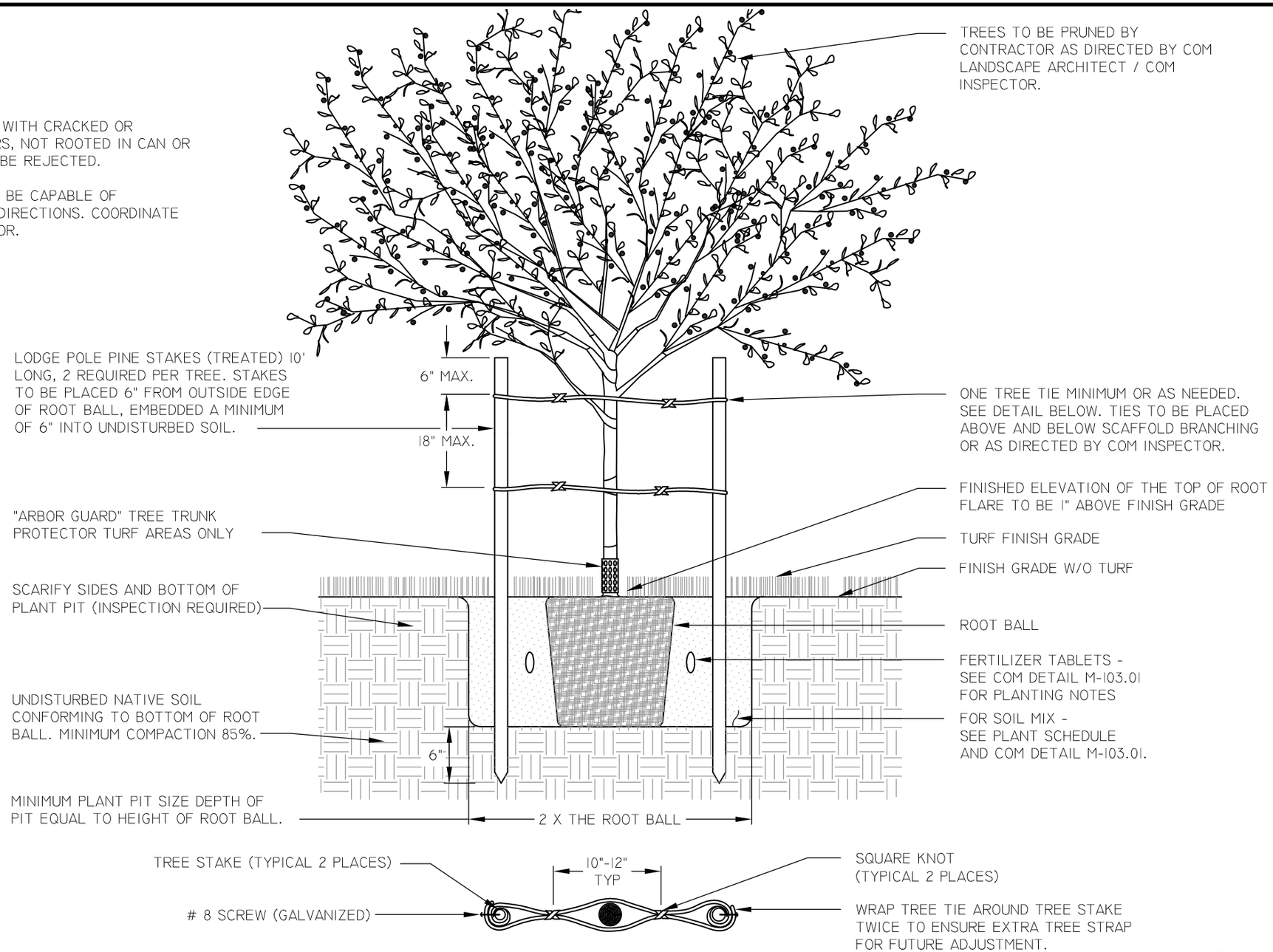

NOT TO SCALE

mesa·az

TREE PLANTING DETAIL IN TURF AREAS

DETAIL NO.
M-103.02

REV. 02/11/2015

NOTES

1. PLANTS DELIVERED WITH CRACKED OR BROKEN CONTAINERS, NOT ROOTED IN CAN OR ROOT BOUND, WILL BE REJECTED.
2. TREE TRUNK SHALL BE CAPABLE OF MOVEMENT IN ALL DIRECTIONS. COORDINATE WITH COM INSPECTOR.

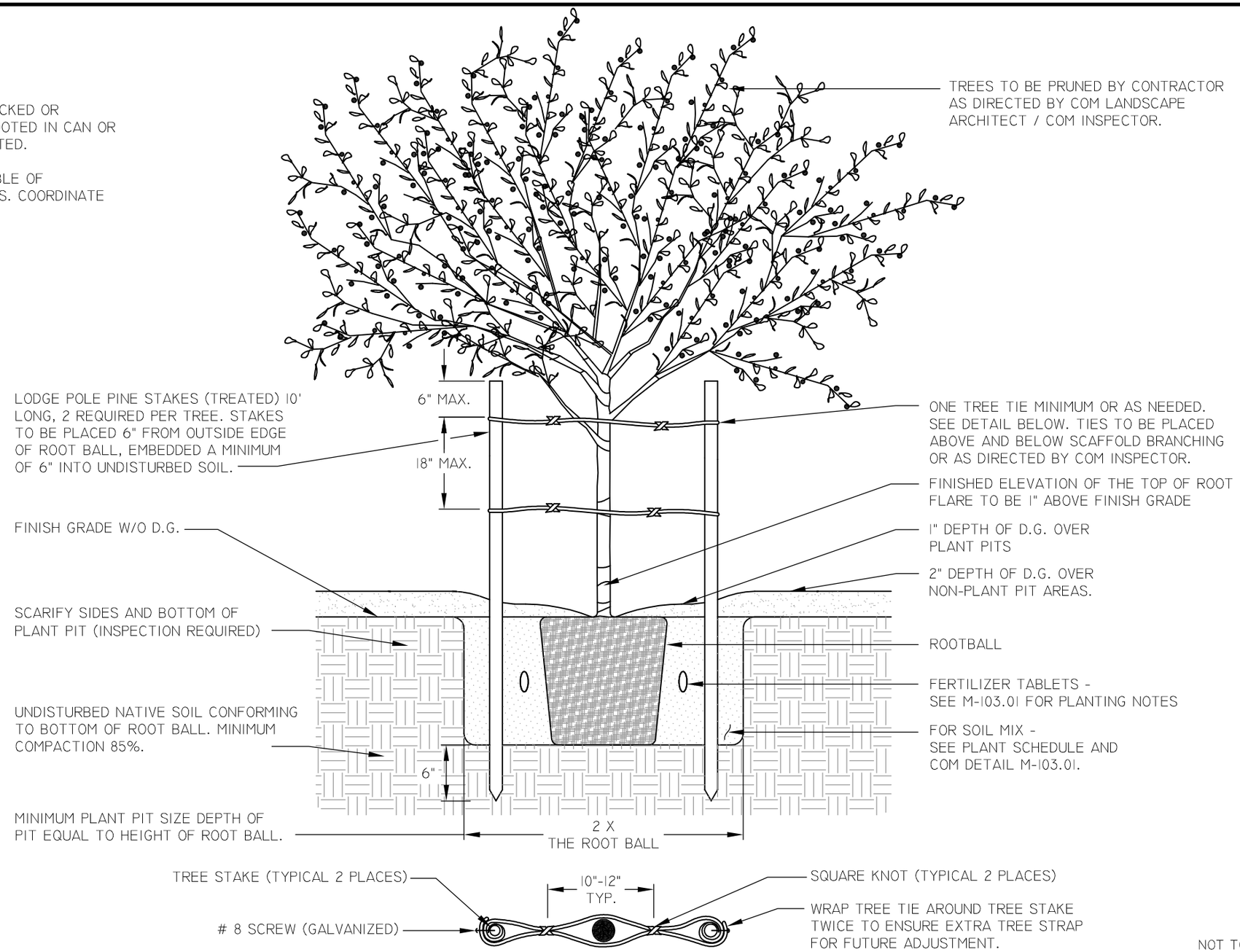

NOT TO SCALE

mesa·az

TREE PLANTING IN DECOMPOSED GRANITE AREAS

DETAIL NO. M-103.03

REV. 02/11/2015

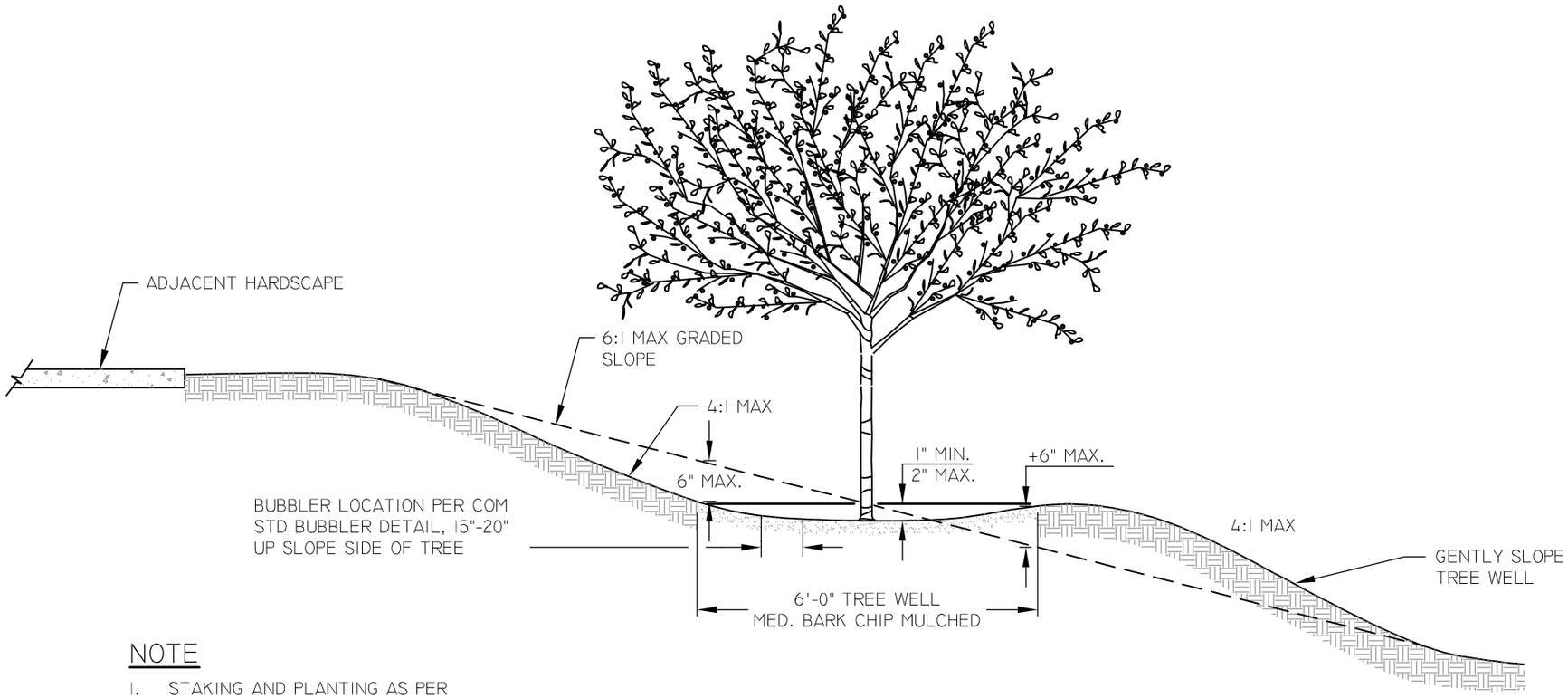

NOTE

1. STAKING AND PLANTING AS PER TREE DETAIL AND PLANTING NOTES.

RETENTION BASIN SLOPE TREE PLANTING

NOT TO SCALE

mesa·az

TREE PLANTING ON SLOPE

DETAIL NO.
M-103.04

REV. 02/11/2015

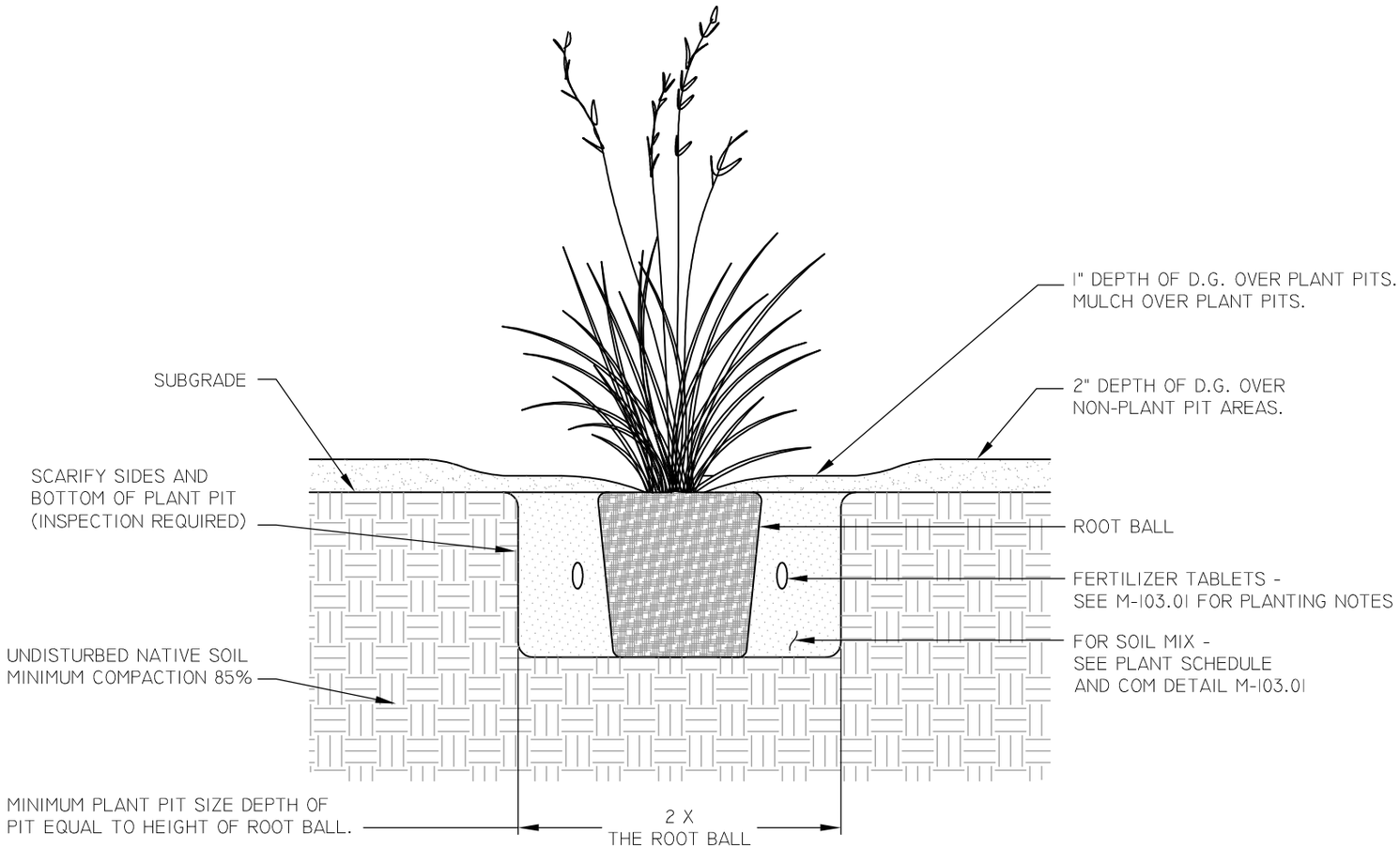

NOTES

1. PLANTS DELIVERED WITH CRACKED OR BROKEN CONTAINERS, NOT ROOTED IN CAN OR ROOT BOUND, WILL BE REJECTED.

2. ALL PLANT ROOT BALLS SHALL BE FLUSH WITH SUBGRADE.

NOT TO SCALE

mesa·az

ACCENT SHRUB PLANTING DETAIL

DETAIL NO.
M-103.05

REV. 02/11/2015

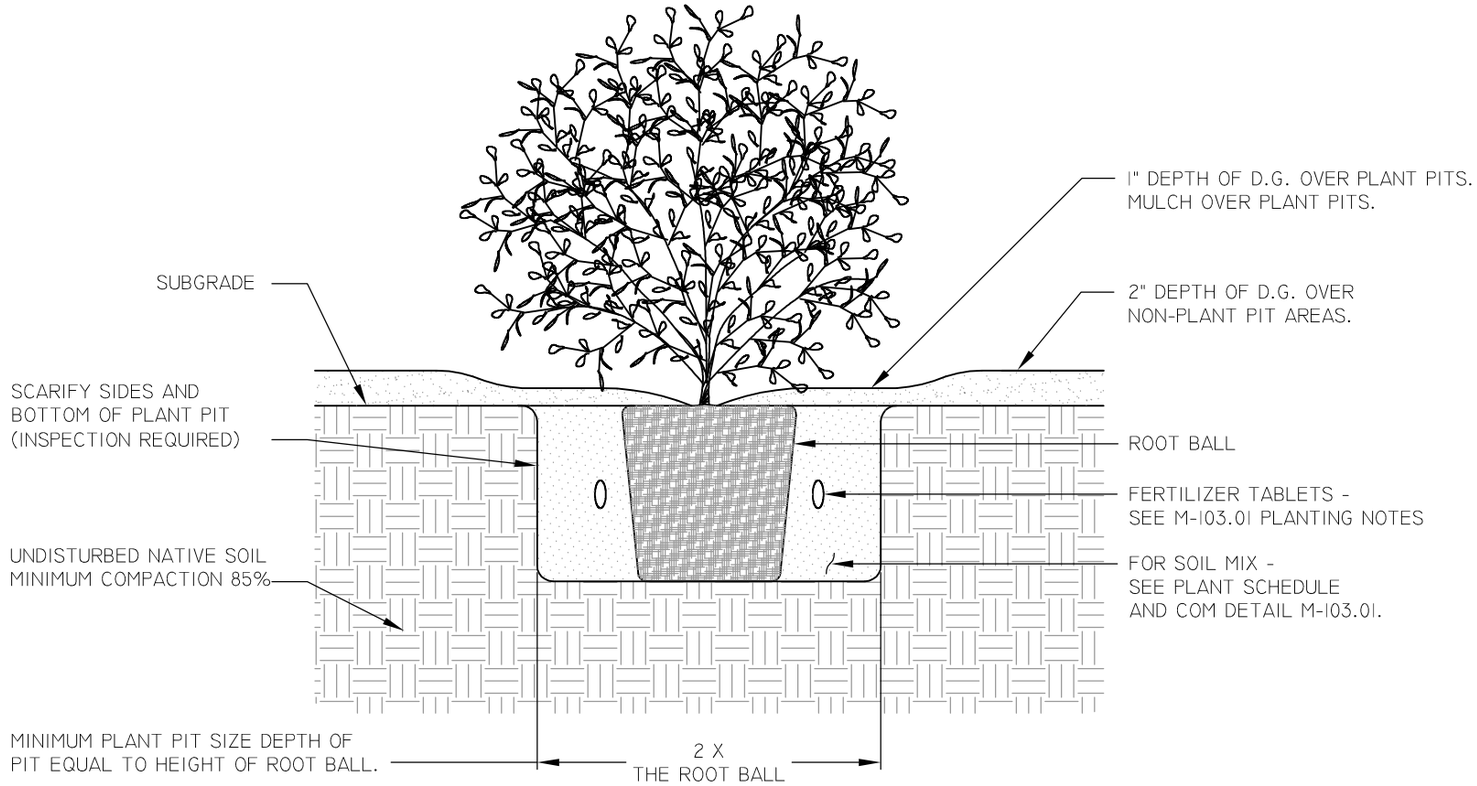

NOTES

1. PLANTS DELIVERED WITH CRACKED OR BROKEN CONTAINERS, NOT ROOTED IN CAN OR ROOT BOUND, WILL BE REJECTED.

2. ALL PLANT ROOT BALLS SHALL BE FLUSH WITH SUBGRADE.

NOT TO SCALE

mesa·az

SHRUB PLANTING DETAIL

DETAIL NO.
M-103.06

REV. 02/11/2015

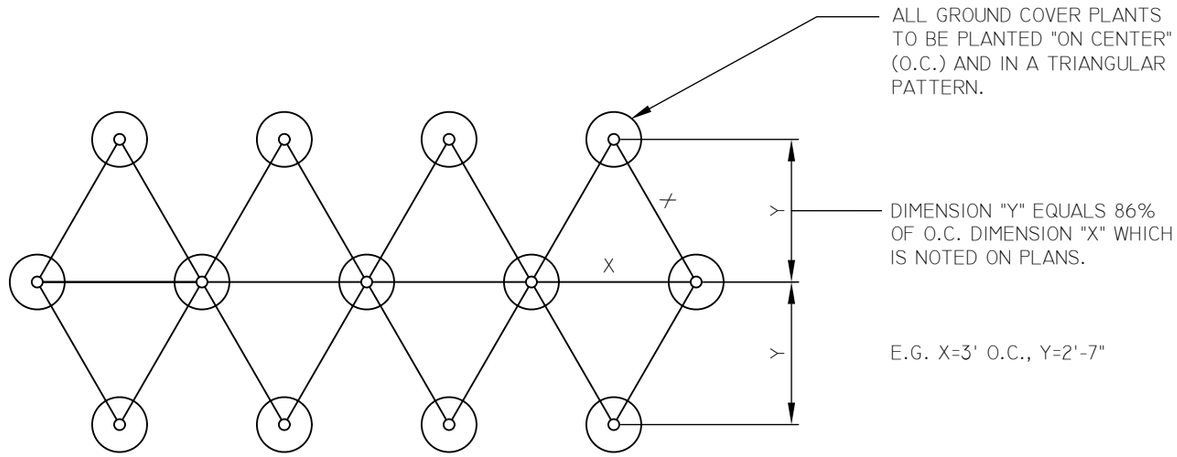

EXAMPLE:
7' O.C.
X=7'
Y=6' (X x (.86))

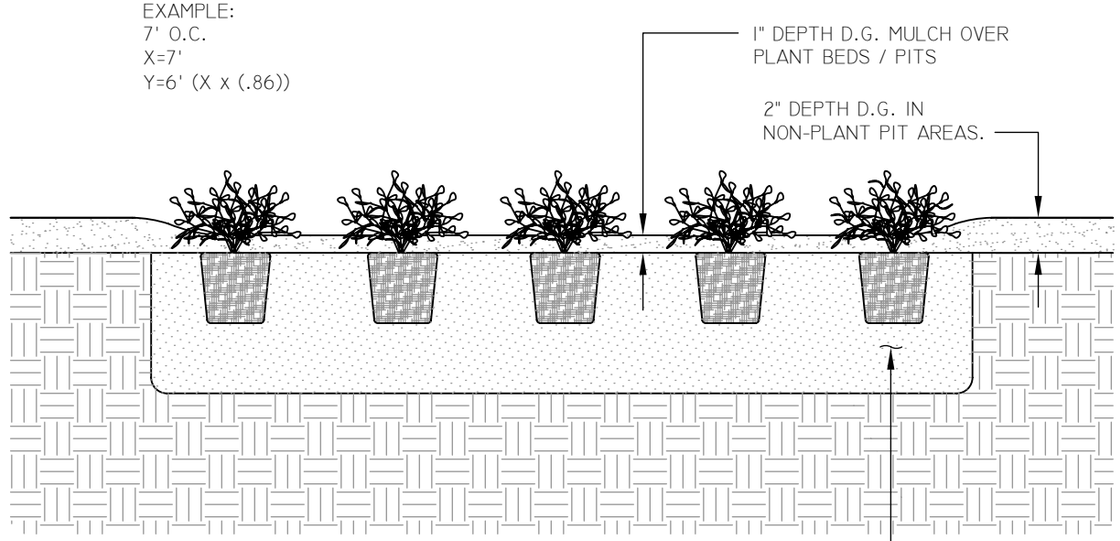

TILL NATIVE SOIL TO A DEPTH OF 8" ADDING 3 CUBIC YARDS OF NITROLIZED HUMUS PER 1000 SQ. FT. ADD GYPSUM AT THE RATE OF 20 LBS. PER 1000 SQ. FT. AND INCORPORATE INTO TOP 2" OF SOIL. APPLY DACTHAL OR SURFLAN TO ALL GROUND COVER BEDS AT THE MANUFACTURER'S RECOMMENDED RATE.

NOT TO SCALE

mesa·az

GROUND COVER IN MASS PLANTING AREAS

DETAIL NO.
M-103.07

REV. 1/31/2014

NOTES

1. SAGUARO TO HAVE MINIMUM 2' DIAMETER ROOT MASS.
2. PLANT AT/OR NO DEEPER THAN 6" FROM ORIGINAL GRADE AND AT SAME SOLAR ORIENTATION AS ORIGINALLY GROWN.
3. BACKFILL TO CONSIST OF DRY HOMOGENOUS MIXTURE OF 1/8" MINUS SCREENED NATIVE SITE SOIL (50%) AND 1/4" MINUS DECOMPOSED GRANITE (50%).
4. GUY SYSTEM TO INCLUDE ATTACHMENT STRAP, GUY, FLAGGING AND STAKES.
5. NO WATER EMISSION POINTS CLOSER THAN 8' FROM BASE OF SAGUARO.

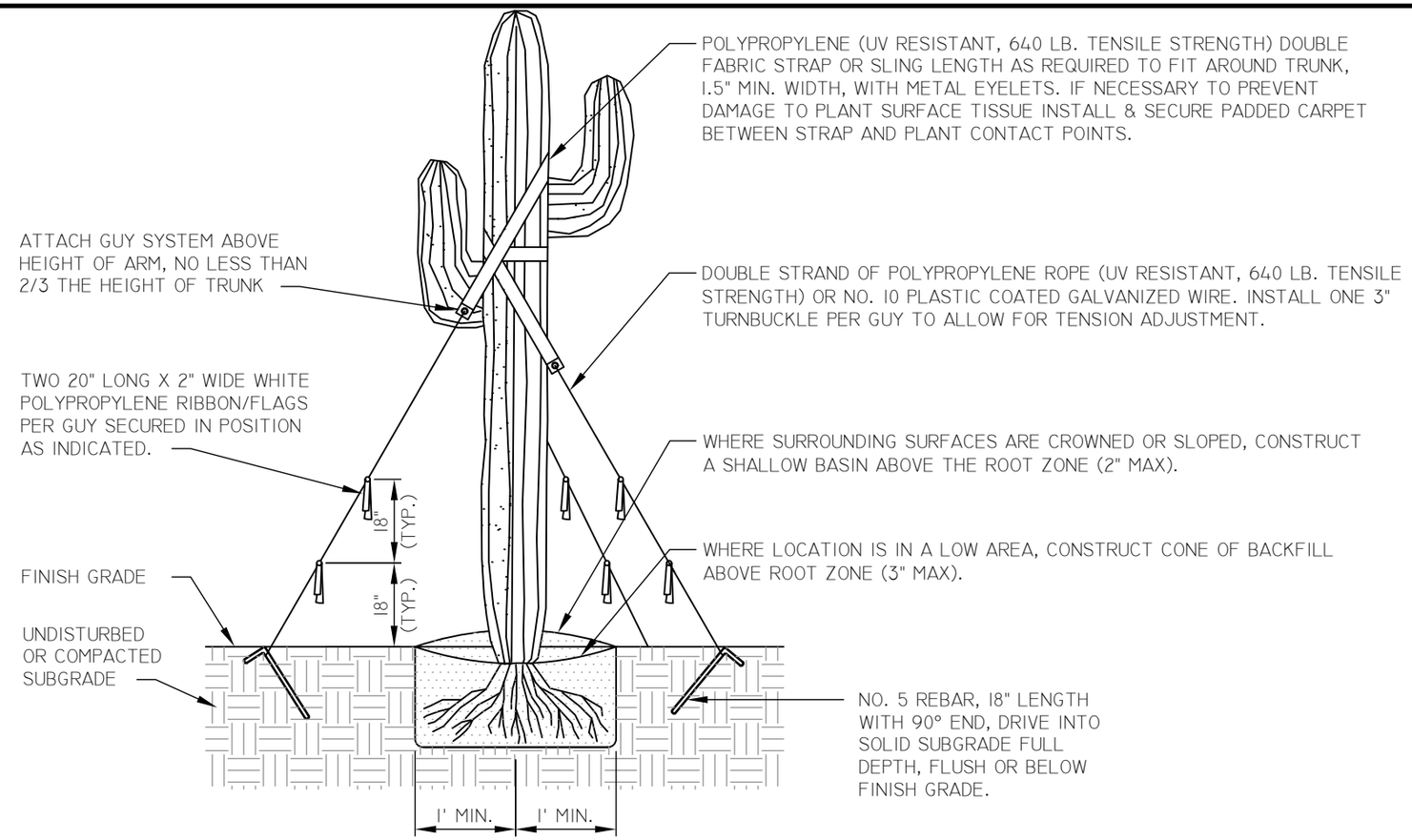

INSTALLATION PROCEDURE

1. CLEANLY CUT AND REMOVE ANY DAMAGED ROOTS. SPRAY ALL ROOT SURFACES WITH AN APPLICATION OF STREPTOMIACIN AND IMMEDIATELY APPLY TO WET SURFACES AN APPLICATION OF DUSTING SULFUR.
2. EXCAVATE OR AUGER PLANT PIT WITH SOLID VERTICAL SIDES. PROVIDE A MINIMUM 6" CLEARANCE FROM ENDS AND ROOTS.
3. SET AND BALANCE PLANT ON A FIRM BED OF BACKFILL. (8 INCH MIN. DEPTH)
4. PLACE AND COMPACT FIRST LIFT OF BACKFILL AROUND ROOTS ELIMINATING ALL VOIDS. PLANT SHOULD BALANCE WITHOUT SUPPORT.
5. INSTALL AND COMPACT REMAINING BACKFILL IN 6" MAX. DEPTH LIFT(S) TO FINISH GRADE AS SHOWN.
6. INSTALL GUY SYSTEMS TO SECURE POSITION AND PREVENT UPPER MOVEMENT OF PLANT (MINIMUM 3 PER PLANT) SPACED AT 120°.
7. MAINTAIN ALL GUYING SYSTEM COMPONENTS FOR A MIN. PERIOD OF ONE YEAR UNLESS OTHERWISE DIRECTED.
8. DO NOT WATER UNTIL 3 WEEKS AFTER PLANTING.
9. RETAIN THE NATIVE PLANT TRANSPORT TAG AS ISSUED FORM THE ARIZONA DEPARTMENT OF AGRICULTURE AND GIVE TO THE COM INSPECTOR.

NOT TO SCALE

mesa·az

SAGUARO PLANTING DETAIL

DETAIL NO.
M-103.08

REV. 1/31/2014

NOTES

1. ROOT PRUNE ALL SHREDDED OR DAMAGED ROOTS. TEAR DRIED SHEATH OFF ROOTS. IF THERE ARE CRUSHED OR DAMAGED ROOTS, MAKE CLEAN CUTS. ENSURE ALL WOUNDS TO THE ROOT SYSTEM ARE SEALED BEFORE PLANTING BY ALLOWING TIME FOR SELF-SEALING OR APPLICATION OF WETTABLE DUSTING SULFUR, (1.5 LBS).
2. PLANT NO DEEPER THAN WHAT THE PLANT WAS PREVIOUSLY PLANTED.
3. BACKFILL TO CONSIST OF CLEAN NATIVE SOIL.
4. APPLY NAPHYL ACETIC ACID OR "B-1" OR APPROVED ROOTING HORMONE IN ACCORDANCE WITH MANUFACTURER'S INSTRUCTIONS.
5. AFTER PLANTING, DO NOT WATER FOR A PERIOD OF SEVEN TO TEN DAYS TO ALLOW ANY ROOTS THAT MAY HAVE BEEN DAMAGED DURING PLANTING TO CALLUS OFF.
6. WATER WEEKLY THROUGH SUMMER, UNLESS INSTRUCTED OTHERWISE.
7. BARE ROOTS SHALL NOT BE OUT OF THE GROUND FOR MORE THAN FIVE DAYS BEFORE PLANTING.
8. RETAIN THE NATIVE PLANT TRANSPORT TAG AS ISSUED FROM THE ARIZONA DEPARTMENT OF AGRICULTURE AND GIVE TO THE COM INSPECTOR.

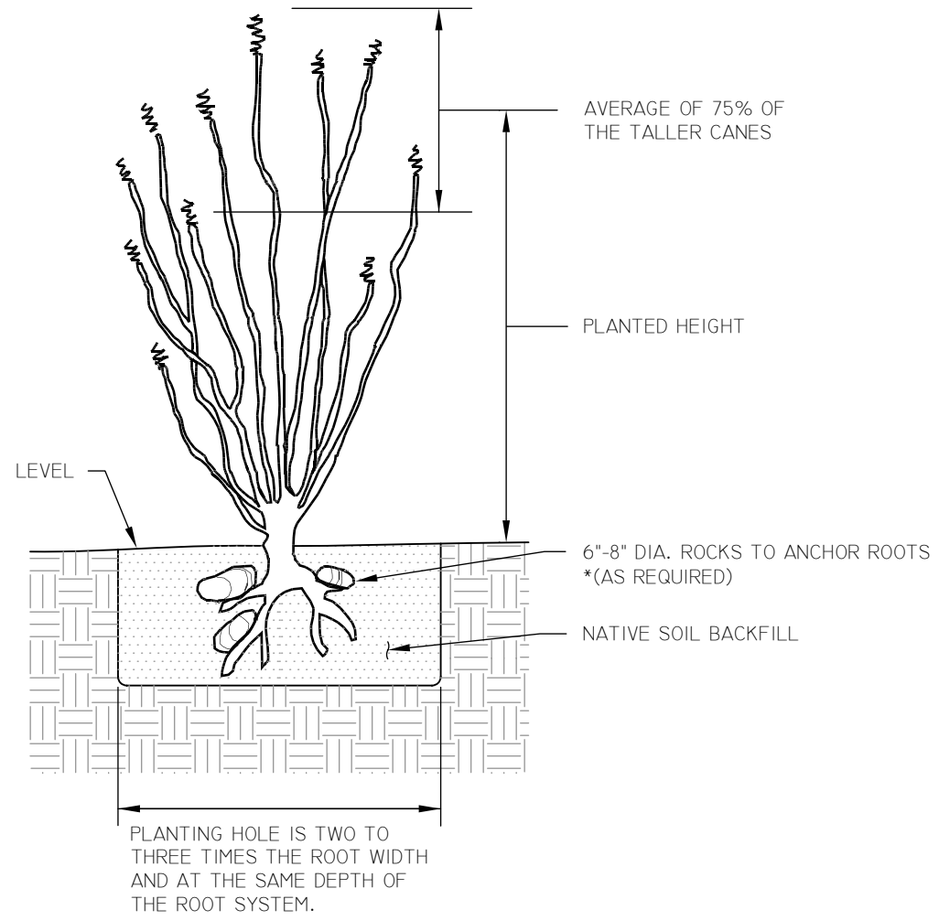

NOT TO SCALE

mesa·az

OCOTILLO PLANTING DETAIL

DETAIL NO.
M-103.09

REV. 1/31/2014

CONTROLLER SCHEDULE

DEPARTMENT	CONTROLLER	FLOW METER	REMOTE CONTROL VALVE
STREETS	CALSENSE	CALSENSE FM # B	YES
STREETS	IRRITROL MC +/ RAINMASTER	NO	YES
STREETS	MINIMUM VALVES / NO ELECTRIC TBOS / IBOC / CELENOID CONTROLLER SOLATROL CONTROLLER D.C. LATCHING?	NO	NO
STREETS/ BASINS	CONTROLLER	-	-
PARKS	MOTOROLA/IRRINET/SCORPIO	BERMAD/EQ.	YES
PARKS BASINS	CONTROLLER	-	-
MIN. VALVES NO ELECTRIC			

mesa·az

CONTROLLER SCHEDULE BY DEPARTMENT

DETAIL NO.
M-104.01

REV. 01/31/2014

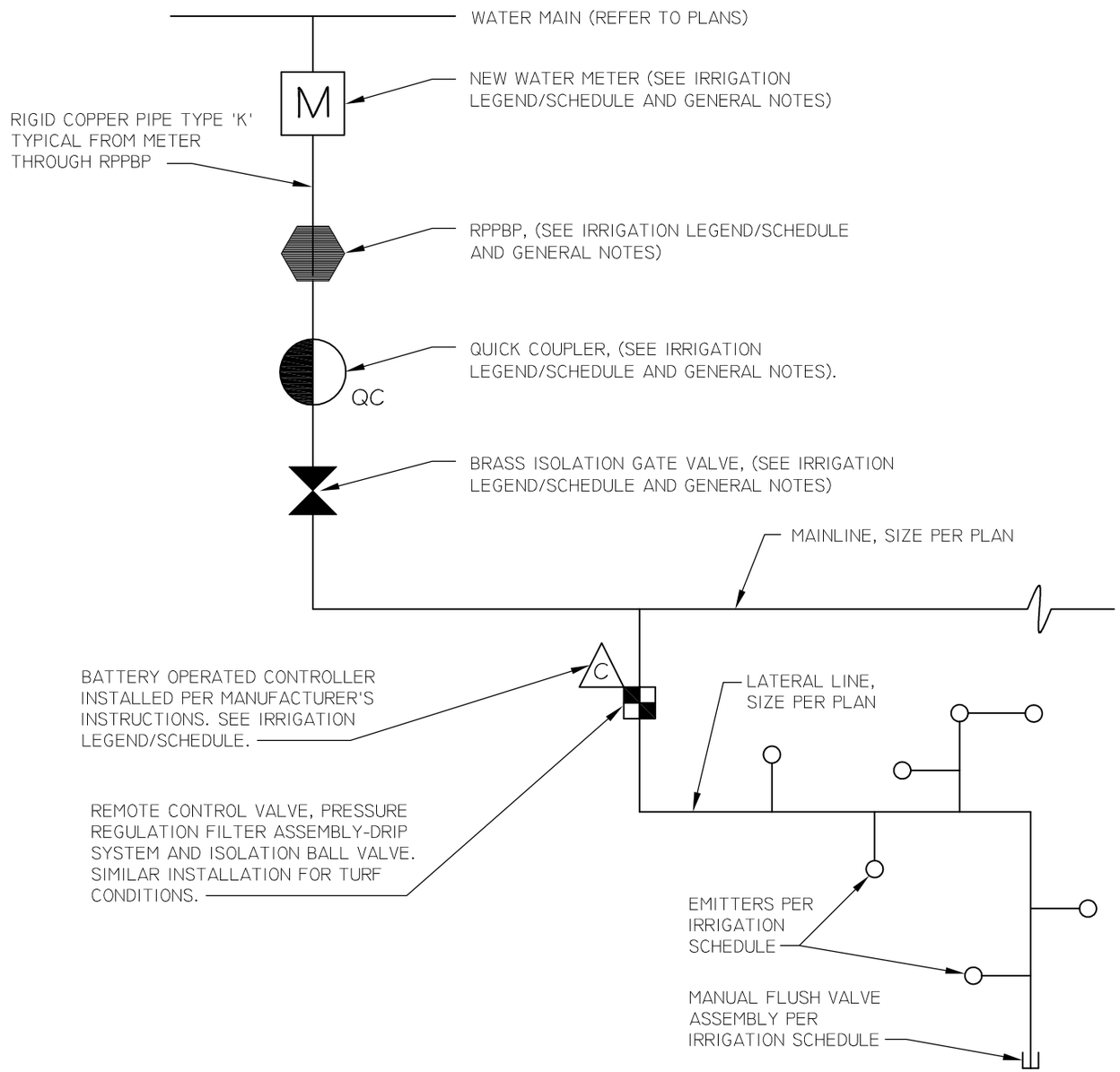

NOTE TO CONSULTANT

ELIMINATE, MODIFY OR COMPLETE DETAIL CALL OUTS BASED ON 'ACTUAL' IRRIGATION DESIGN.

STREETS - TBOS (IN VALVE BOX)

NOT TO SCALE

mesa·az

SCHEMATIC IRRIGATION LAYOUT - BATTERY IRRIGATION CONTROLLER

DETAIL NO.
M-104.02

REV. 02/12/2015

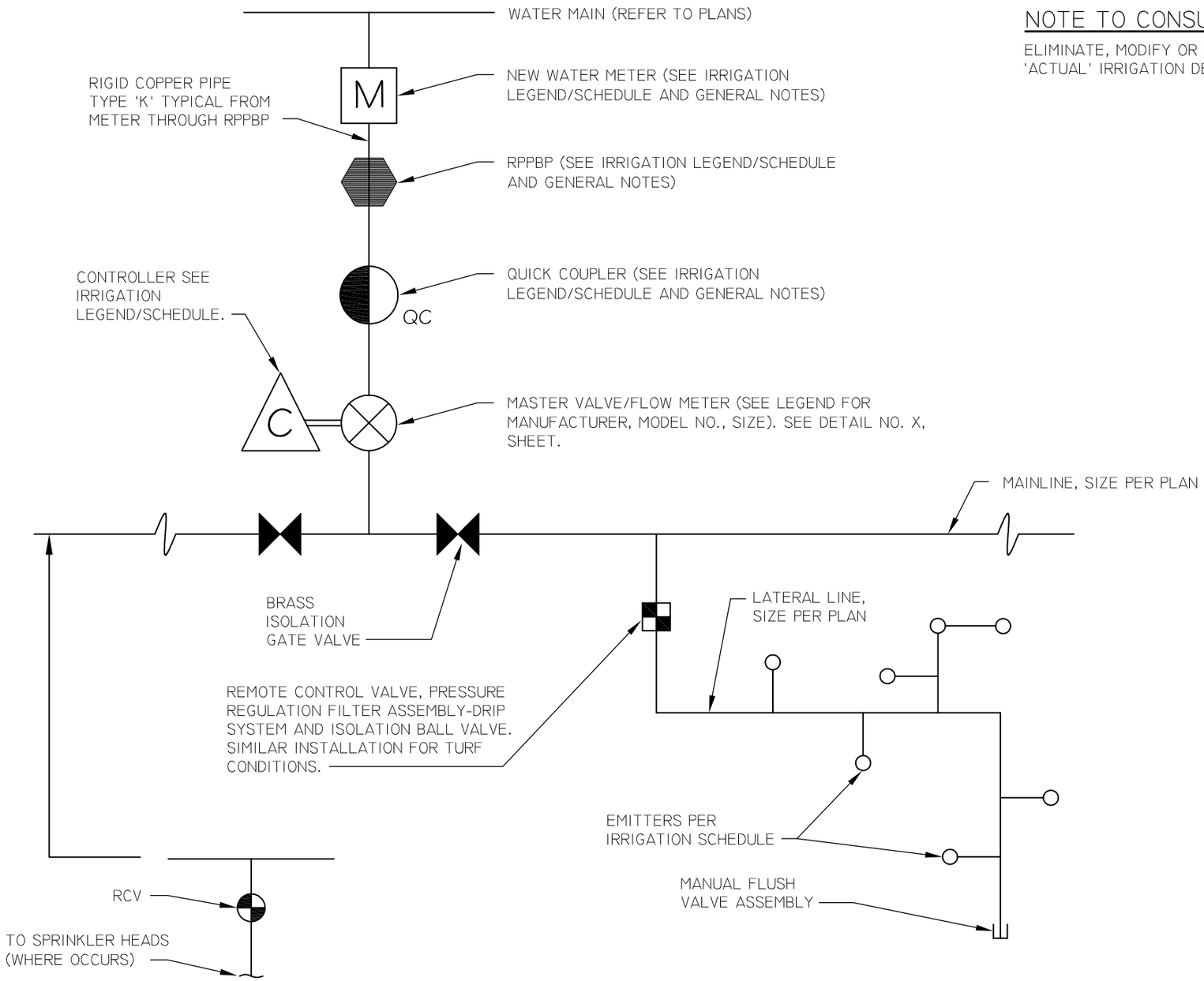

NOTE TO CONSULTANT

ELIMINATE, MODIFY OR COMPLETE DETAIL CALL OUTS BASED ON 'ACTUAL' IRRIGATION DESIGN.

NOT TO SCALE

mesa·az

SCHEMATIC IRRIGATION LAYOUT-
IRRIGATION WITH FLOW CONTROL

DETAIL NO.
M-104.03

REV. 02/12/2015

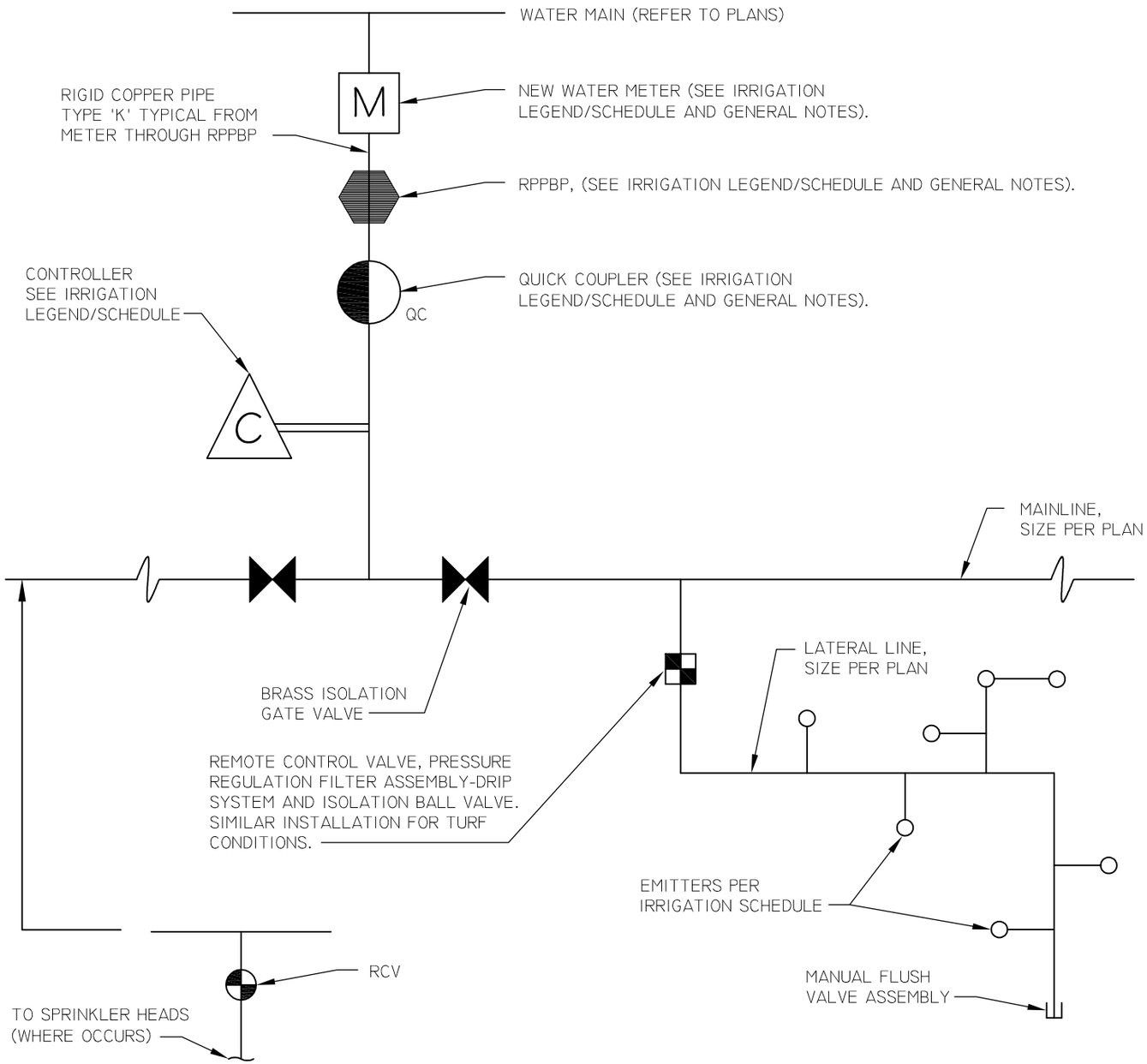

NOTE TO CONSULTANT

ELIMINATE, MODIFY OR COMPLETE DETAIL CALL OUTS BASED ON 'ACTUAL' IRRIGATION DESIGN.

STREETS - IRRITROL, HYDROPOINT, RAINMASTER, MC±

NOT TO SCALE

mesa·az

SCHEMATIC IRRIGATION LAYOUT-
STANDARD CONTROLLER WITHOUT FLOW CONTROL

DETAIL NO.
M-104.04

REV. 02/12/2015

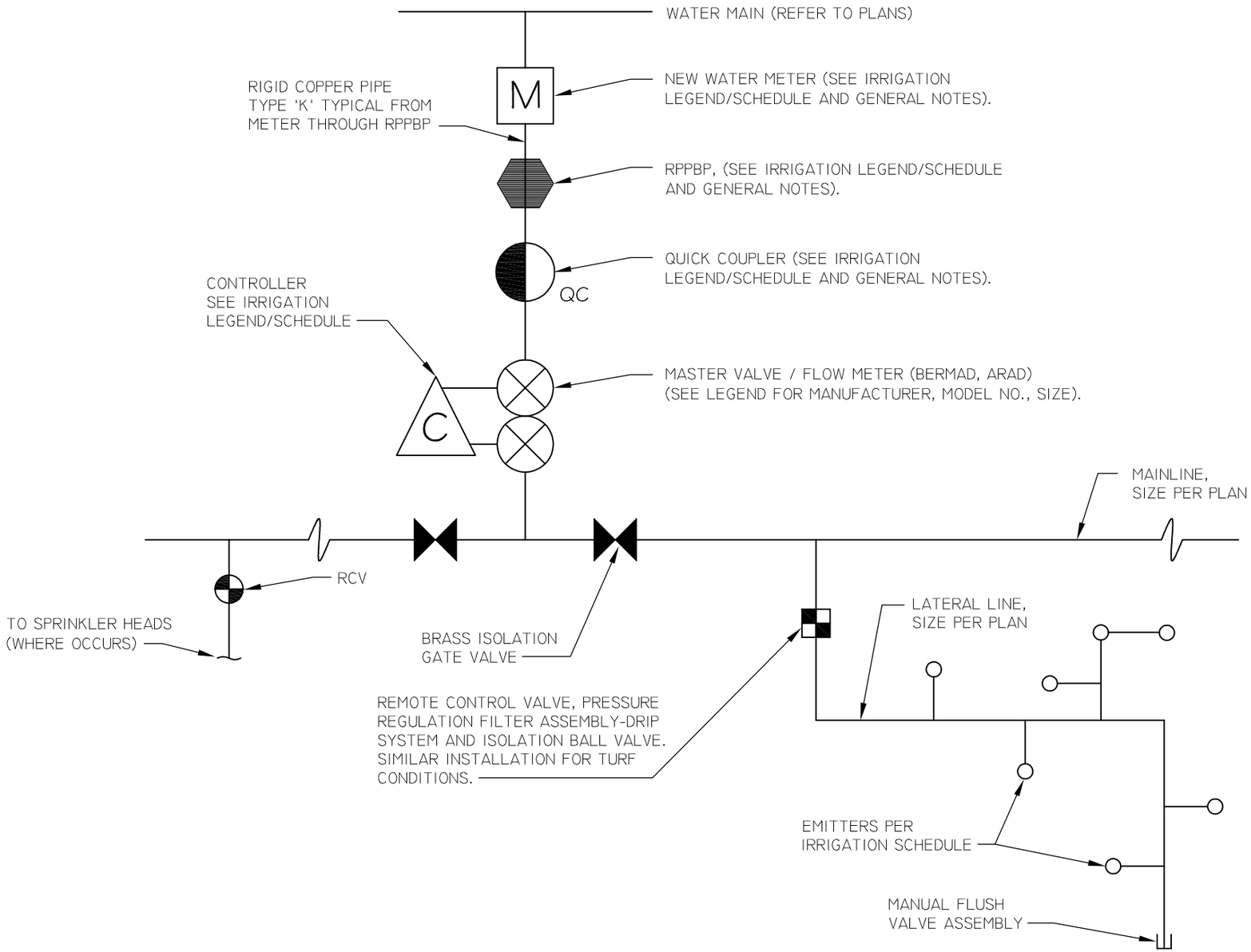

NOTE TO CONSULTANT

ELIMINATE, MODIFY OR COMPLETE DETAIL CALL OUTS BASED ON 'ACTUAL' IRRIGATION DESIGN.

PARKS - MOTOROLA APPLICATION WITH MASTER VALVE AND FLOW METER INSTALLATION

NOT TO SCALE

mesa·az

SCHEMATIC IRRIGATION LAYOUT-
MOTOROLA CONTROLLER

DETAIL NO.
M-104.05

REV. 02/12/2015

CONTROLLER NOTES

1. WHERE POSSIBLE, ALL WIRE SHALL BE ROUTED WITHIN CONDUIT. ALL WIRING NOT IN CONDUIT SHALL BE BUNDLED.
2. ALL ELECTRIC COMPONENTS AND INSTALLATIONS SHALL BE IN ACCORDANCE WITH APPLICABLE CODES.
3. CONTRACTOR SHALL ASSEMBLE ENCLOSURE WITH MOUNTED COMPONENTS IN A SHOP. PROVIDE DETAILED SHOP DRAWINGS OF INSTALLATION PRIOR TO CONSTRUCTION.
4. SECURITY CABINET SHALL BE STAINLESS STEEL WITH STAINLESS STEEL DOOR.

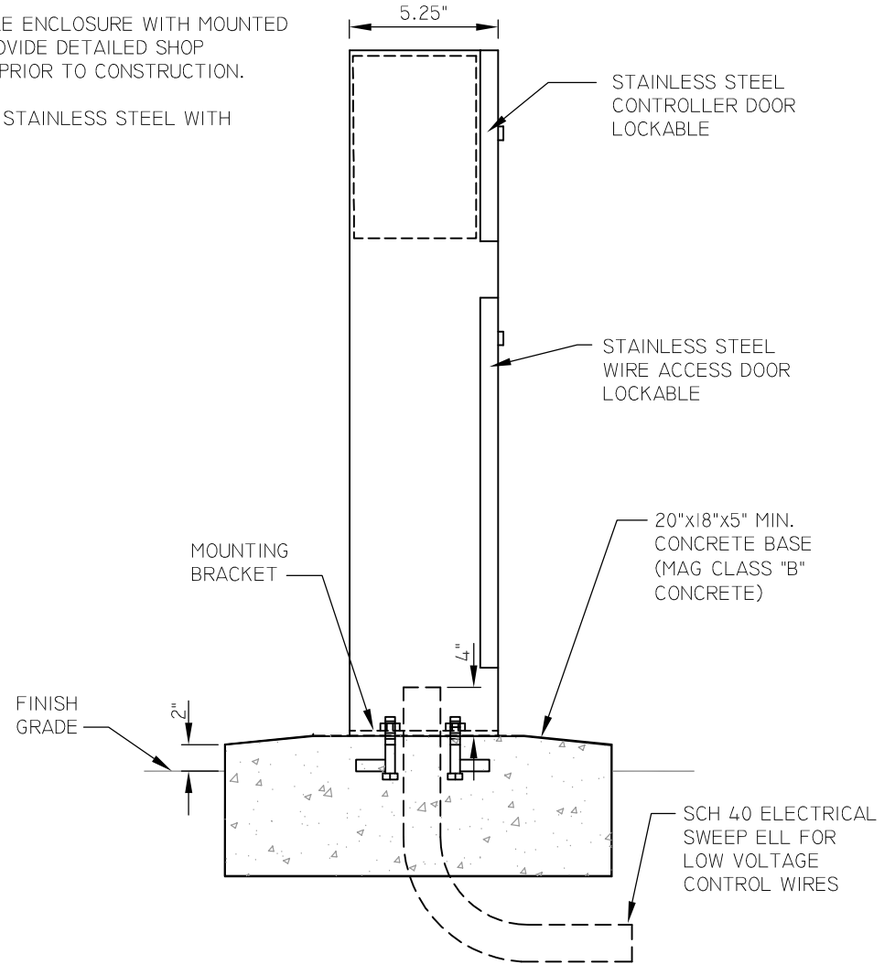

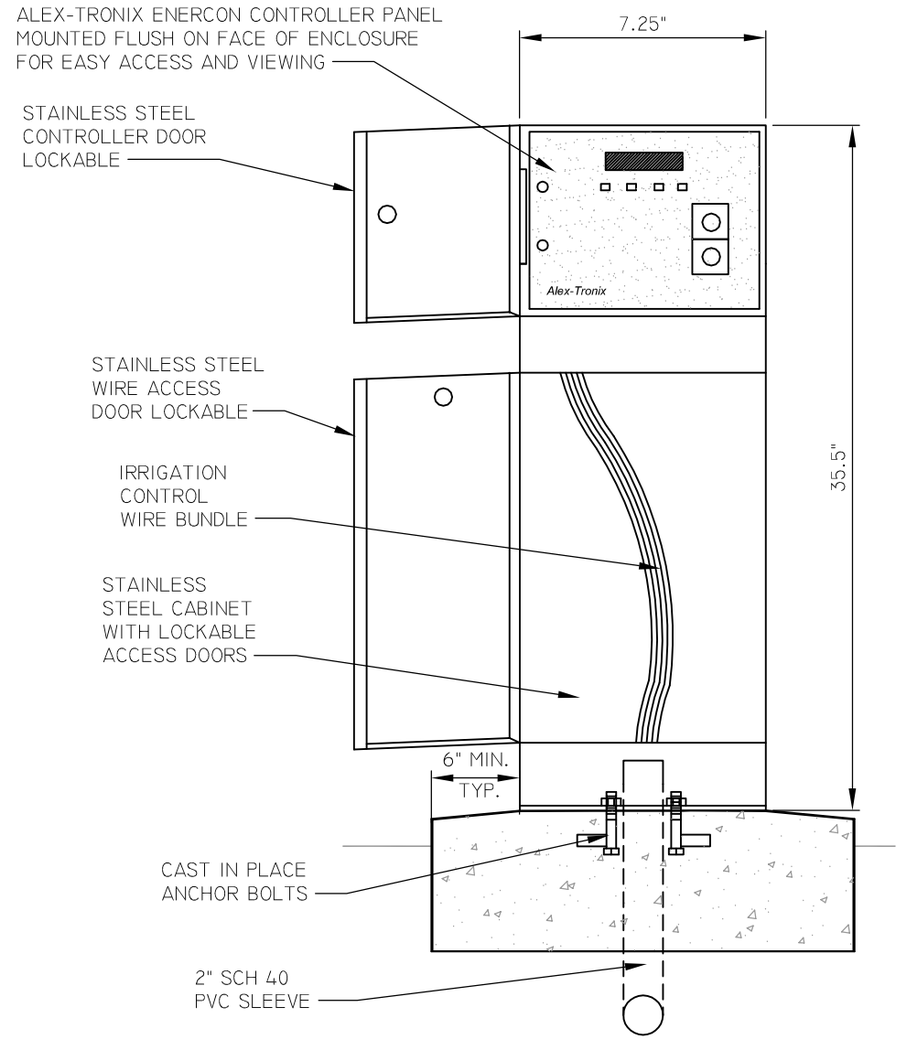

ALEX-TRONIX MODEL NO.
ENERCON-4
WITH OPTIONAL STAINLESS STEEL CASE.
(4) = # OF STATIONS
PH. 888-224-7630
HTTP://WWW.ALEX-TRONIX.COM/

NOT TO SCALE

mesa·az

ALEX-TRONIX CONTROLLER AND ENCLOSURE

DETAIL NO.
M-104.06

REV. 02/12/2015

NOTES

1. 110 VAC POWER SHALL BE ROUTED FROM POWER SUPPLY TO CIRCUIT BREAKER BOX, AND THEN CONNECTED TO OUTLET WITH DISCONNECT AND CONTROLLERS.
2. WHERE POSSIBLE, ALL WIRE SHALL BE ROUTED WITHIN CONDUIT. ALL WIRING NOT IN CONDUIT SHALL BE BUNDLED.
3. ALL ELECTRIC COMPONENTS AND INSTALLATIONS SHALL BE IN ACCORDANCE WITH "ALL" APPLICABLE CODES.
4. CONTRACTOR SHALL ASSEMBLE ENCLOSURE WITH MOUNTED COMPONENTS IN A SHOP. PROVIDE DETAILED SHOP DRAWINGS OF INSTALLATION FOR REVIEW AND COMMENT PRIOR TO CONSTRUCTION.
5. INSTALL 1-INCH SCH. 40 PVC SLEEVE FOR 8' COPPER GROUND ROD.
6. SECURITY CABINET SHALL HAVE STEEL DOOR WITH DOCUMENT TRAY SUITABLE FOR STORING MANUALS AND REDUCED DRAWINGS.

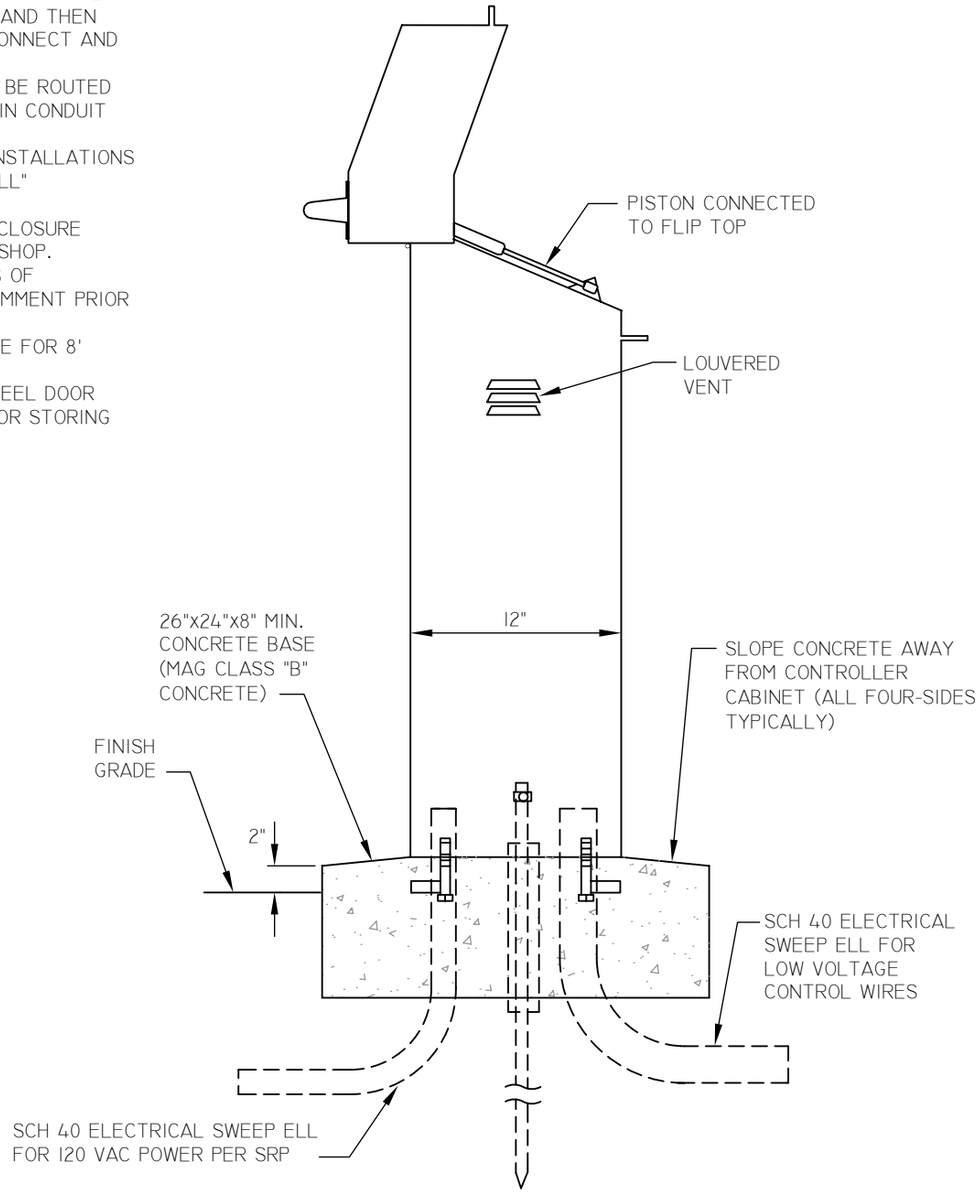

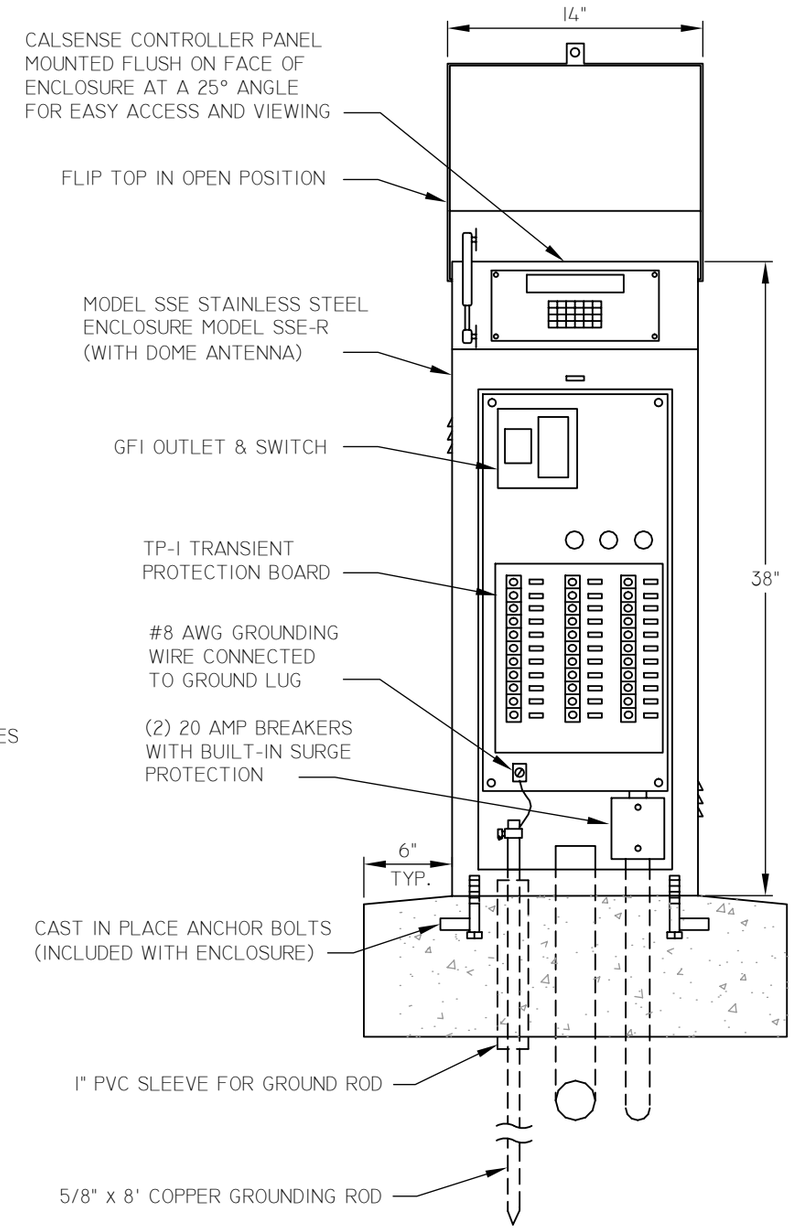

CALSENSE MODEL NO.
ET-2000-(X)-R-RR-SSE-R
(X) = # OF STATIONS

NOT TO SCALE

mesa·az

CALSENSE ET2000 CONTROLLER AND ENCLOSURE

DETAIL NO.
M-104.07

REV. 1/31/2014

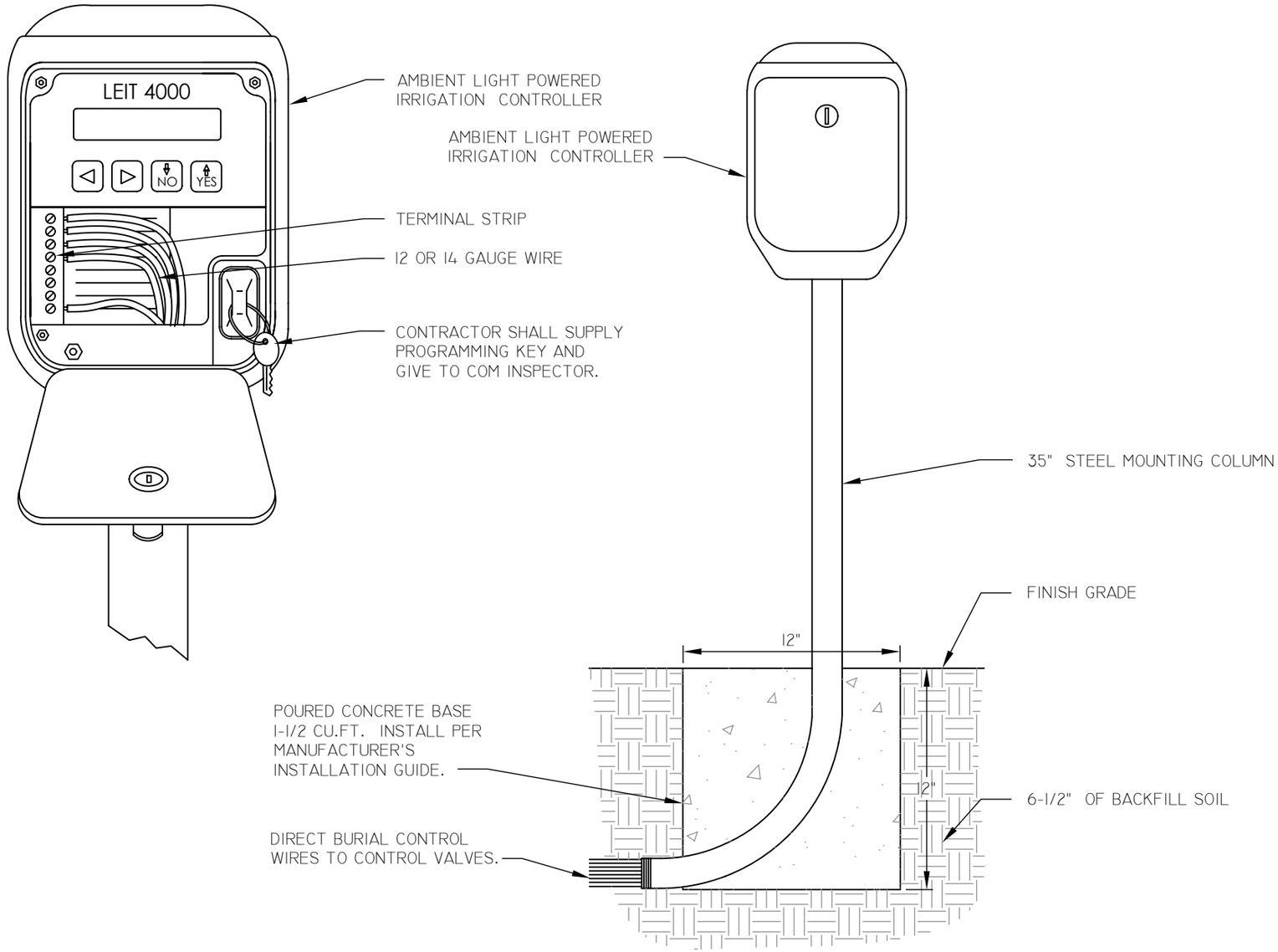

NOT TO SCALE

mesa·az

LIGHT ENERGIZED IRRIGATION CONTROLLER (LEIT)

DETAIL NO.
M-104.08

REV. 1/31/2014

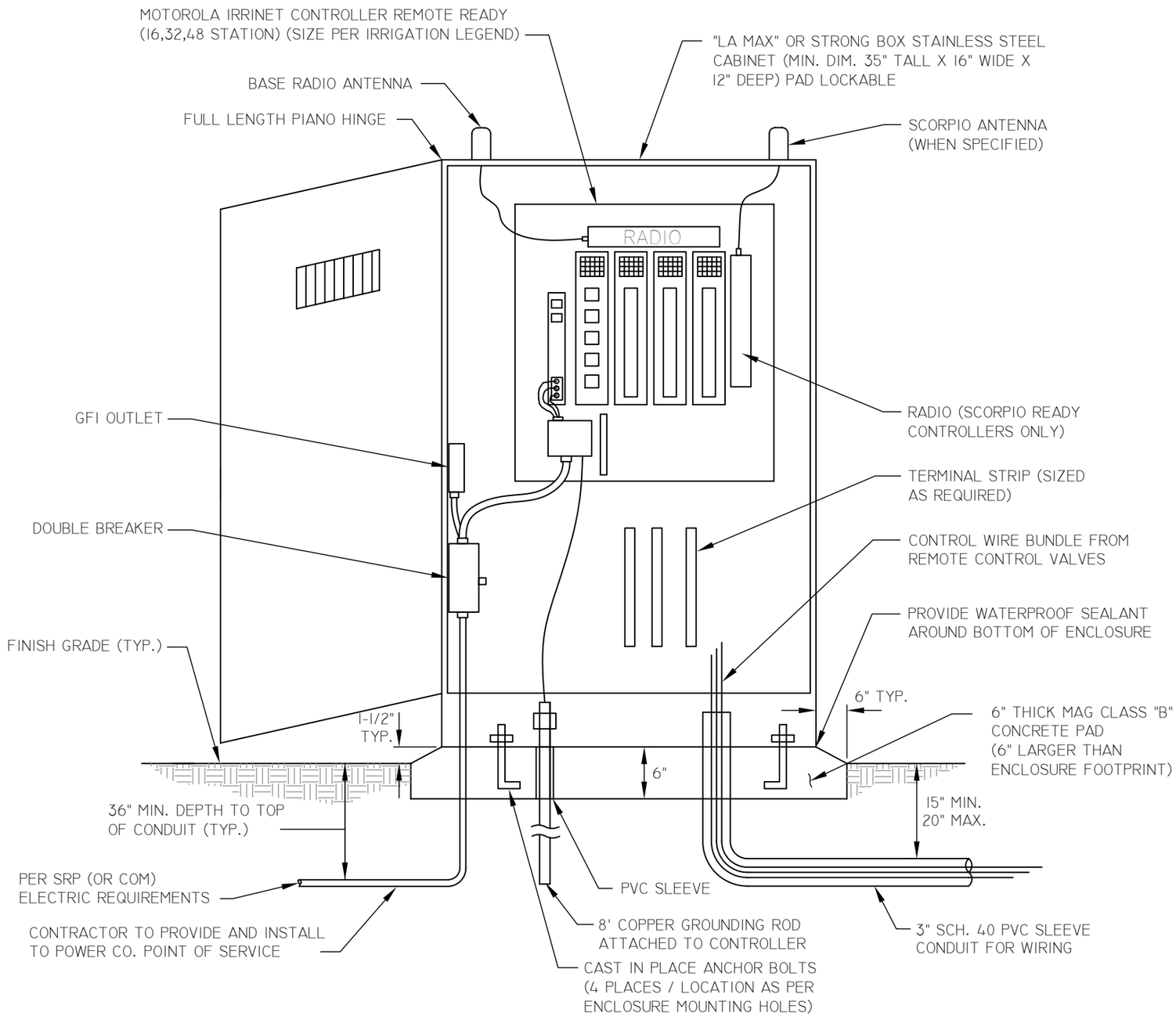

NOTES

1. 110 VAC POWER SHALL BE ROUTED FROM POWER SUPPLY TO CIRCUIT BREAKER BOX, AND THEN CONNECTED TO OUTLET WITH DISCONNECT, SATELLITE CONTROLLER(S), AND RADIO.
2. CONTROL WIRES ENTERING ENCLOSURE SHALL BE ROUTED DIRECTLY TO, AND CONNECTED TO, TERMINAL STRIP(S). 18 GAUGE WIRE SHALL BE ROUTED BETWEEN TERMINAL STRIP(S) AND SATELLITE CONTROLLER(S).
3. WHERE POSSIBLE, ALL WIRE SHALL BE ROUTED WITHIN CONDUIT. ALL WIRING NOT IN CONDUIT SHALL BE BUNDLED AND TAPED EVERY SIX INCHES.
4. ALL ELECTRIC COMPONENTS AND INSTALLATIONS SHALL BE IN ACCORDANCE WITH ALL APPLICABLE CODES.
5. CONTRACTOR SHALL ASSEMBLE ENCLOSURE WITH MOUNTED COMPONENTS IN A SHOP. SUBMIT DETAILED SHOP DRAWINGS OF INSTALLATION PRIOR TO CONSTRUCTION.
6. 1-INCH SCH. 40 PVC SLEEVE FOR 8' COPPER GROUND ROD. (SEE COM DETAIL M-104.10).
7. STAINLESS STEEL SECURITY CABINET SHALL HAVE A DOOR WITH DOCUMENT TRAY SUITABLE FOR STORING MANUALS AND REDUCED DRAWINGS.
8. HARDWIRE FROM BREAKER TO CONTROLLER WITH FLEX CONDUIT. CONTROLLER AND GFI OUTLET SHALL BE ON SEPARATE BREAKERS.
9. CONTROLLER TO BE PLACED IN NON-TURF AREA, AWAY FROM SPRINKLER COVERAGE. SEE SHEET NO. "X" FOR LOCATION.

NOT TO SCALE

mesa·az

MOTOROLA IRRINET CONTROLLER

DETAIL NO.
M-104.09

REV. 1/31/2014

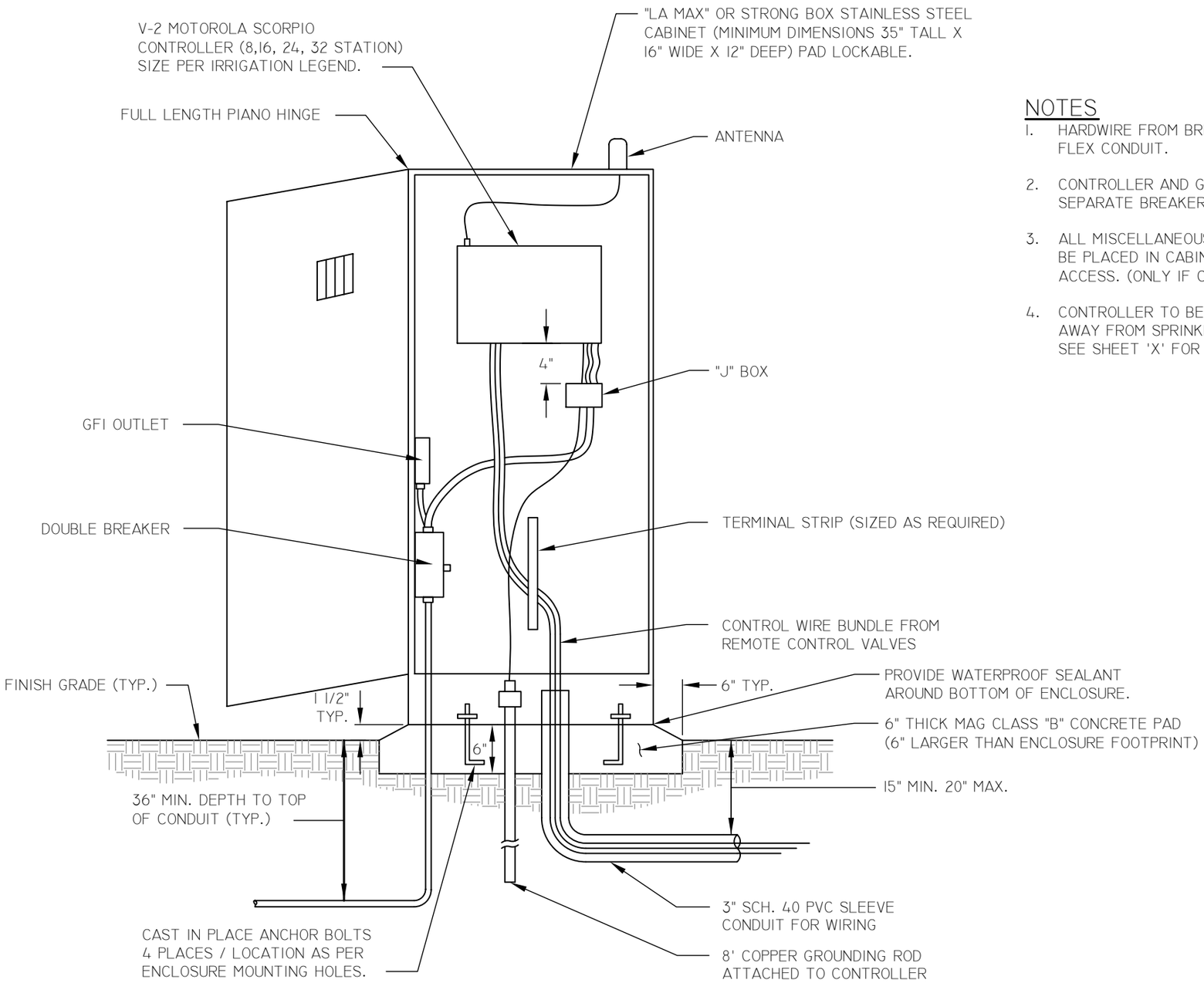

NOTES

1. HARDWIRE FROM BREAKER TO CONTROLLER WITH FLEX CONDUIT.
2. CONTROLLER AND GFI OUTLET SHOULD BE ON SEPARATE BREAKERS.
3. ALL MISCELLANEOUS CONTACTORS / RELAYS SHALL BE PLACED IN CABINET TO ALLOW FOR CONTROLLER ACCESS. (ONLY IF CONTROLLING LIGHTING).
4. CONTROLLER TO BE PLACED IN NON-TURF AREA AWAY FROM SPRINKLER COVERAGE. SEE SHEET 'X' FOR LOCATION.

NOT TO SCALE

mesa·az

MOTOROLA SCORPIO CONTROLLER

DETAIL NO.
M-104.10

REV. 11/2013

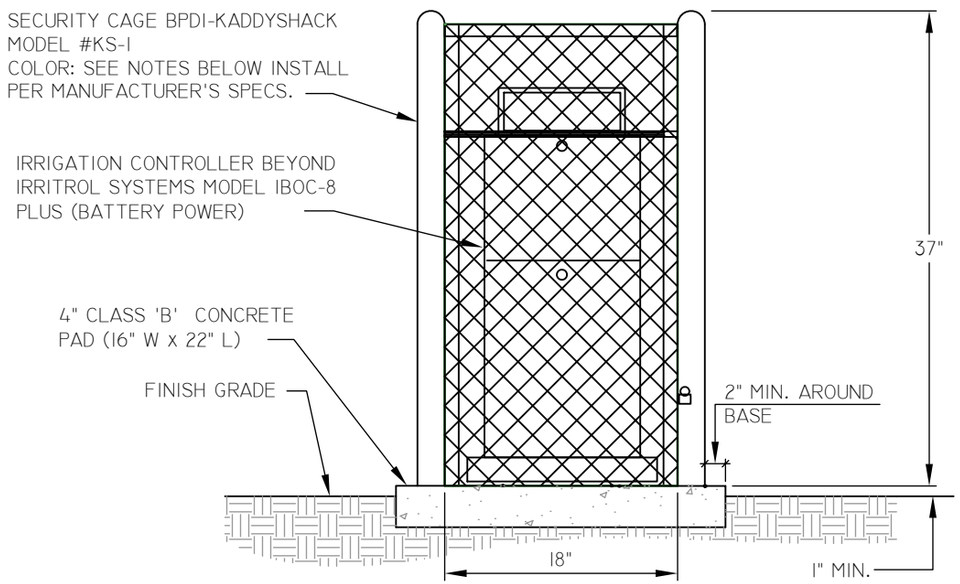

ELEVATION

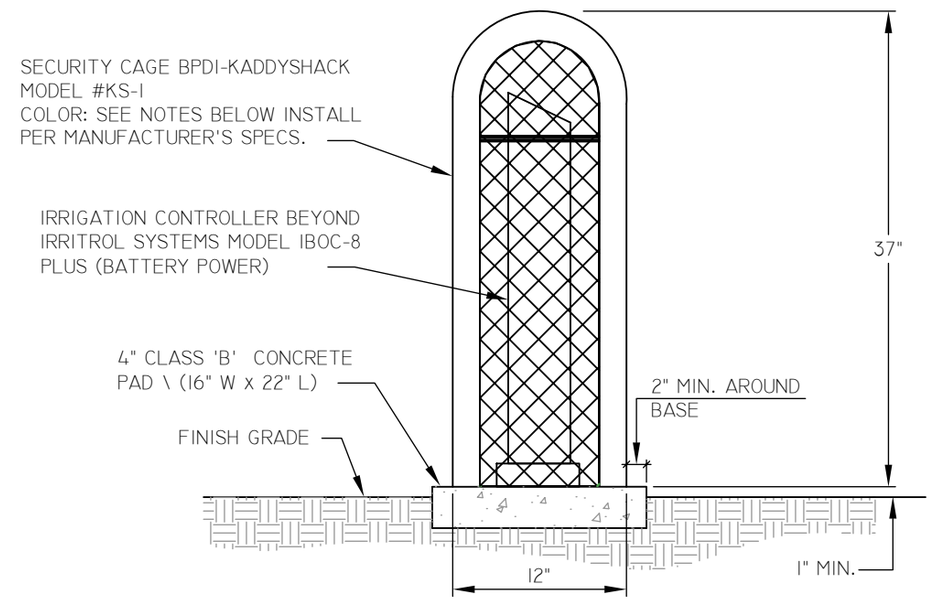

SECTION

NOTES

1. PEDESTAL MOUNT CONTROLLER IS TO BE PLACED ON CONCRETE SLAB WITH A SECURITY CAGE ENCLOSURE. (SEE DETAILS) B.P.D.I. 'KADDYSHACK' MODEL #KS-1 - HINGED UNIT OR APPROVED EQUAL.
2. INSTALL PER MANUFACTURER'S SPECIFICATIONS.
3. CONTRACTOR SHALL STAKE LOCATION AND CONTACT CITY OF MESA PRIOR TO INSTALLATION FOR APPROVAL.
4. CONTRACTOR SHALL INSTALL 4" CONCRETE SLAB TO SUPPORT CONTROLLER, PEDESTAL & SECURITY CAGE (SEE DETAILS). CONTRACTOR SHALL SUBMIT SHOP DRAWINGS FOR CITY APPROVAL.
5. AFTER WELDING, ENTIRE UNIT SHALL BE SANDBLASTED, PROCESSED WITH IRON PHOSPHATE PRETREATMENT.
6. ELECTRO - STATIC APPLICATION OF POWDER SHALL BE FUSION BONDED EPOXY - COLOR: TAN.
7. HIGH GLOSS- SMOOTH FIELD 180 LB. IMPACT COATING.
8. ALL BOLTS FOR HINGES AND HASP SHALL BE ZINC PLATED TAMPER PROOF.

NOT TO SCALE

mesa·az

IRRIGATION CONTROLLER
SECURITY CAGE ON CONCRETE SLAB

DETAIL NO.
M-104.11

REV. 1/31/2014

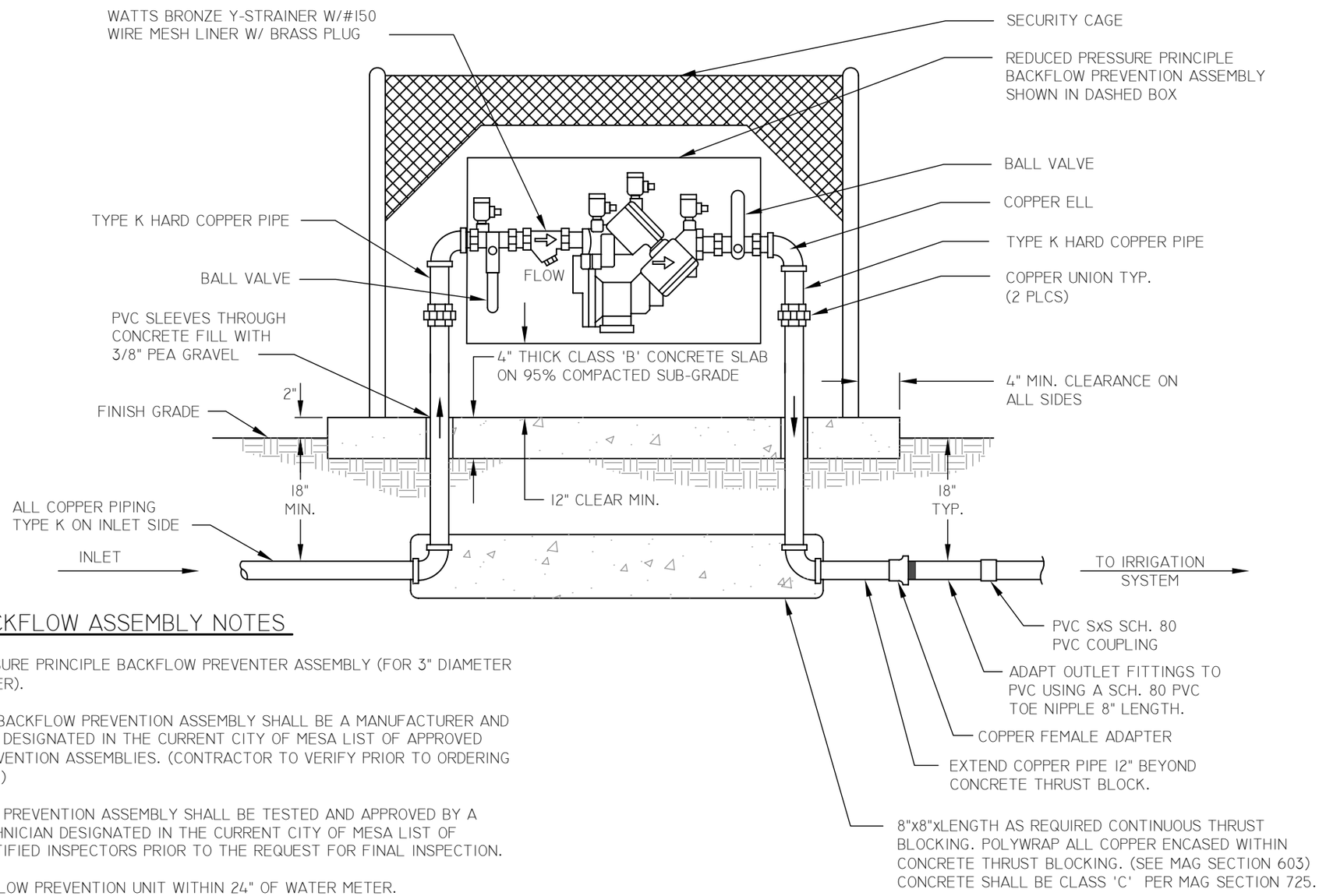

GENERAL BACKFLOW ASSEMBLY NOTES

1. REDUCED PRESSURE PRINCIPLE BACKFLOW PREVENTER ASSEMBLY (FOR 3" DIAMETER PIPE OR SMALLER).
2. THE REQUIRED BACKFLOW PREVENTION ASSEMBLY SHALL BE A MANUFACTURER AND MODEL NUMBER DESIGNATED IN THE CURRENT CITY OF MESA LIST OF APPROVED BACKFLOW PREVENTION ASSEMBLIES. (CONTRACTOR TO VERIFY PRIOR TO ORDERING AND ASSEMBLY.)
3. THE BACKFLOW PREVENTION ASSEMBLY SHALL BE TESTED AND APPROVED BY A CERTIFIED TECHNICIAN DESIGNATED IN THE CURRENT CITY OF MESA LIST OF APPROVED CERTIFIED INSPECTORS PRIOR TO THE REQUEST FOR FINAL INSPECTION.
4. INSTALL BACKFLOW PREVENTION UNIT WITHIN 24" OF WATER METER.
5. COPPER FITTINGS SHALL BE CONNECTED WITH LEAD FREE SOLDER JOINTS.
6. AFTER TESTING, INSTALL A BRASS PLUG IN EACH TESTCOCK ON THE ASSEMBLY.

NOT TO SCALE

mesa·az

REDUCED PRESSURE BACKFLOW PREVENTION
ASSEMBLY - 2" AND SMALLER

DETAIL NO.
M-105.01

REV. 1/31/2014

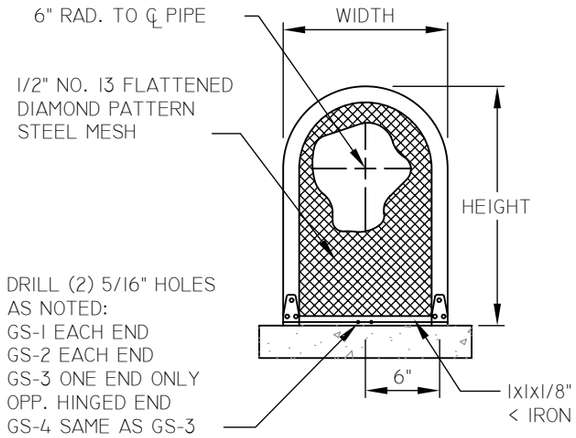

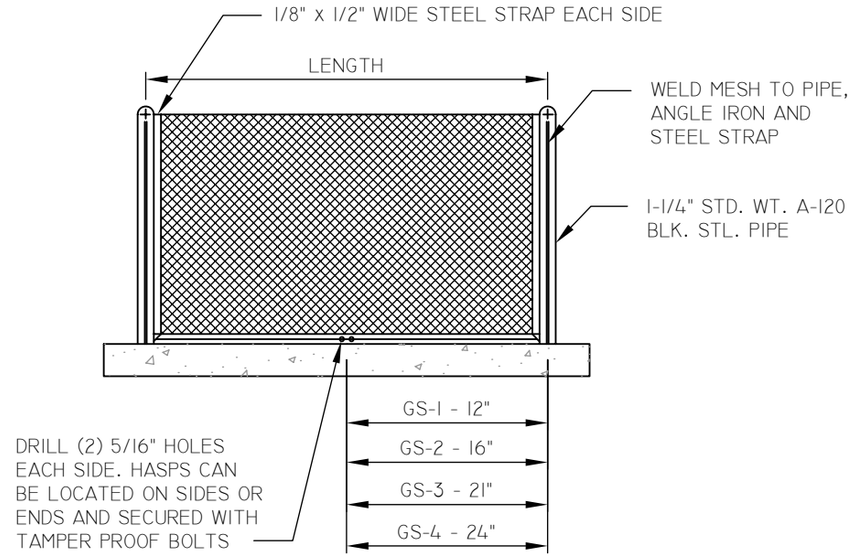

NOTES

1. AFTER WELDING, ENTIRE UNIT SHALL BE SANDBLASTED, AND PROCESSED WITH IRON PHOSPHATE PRETREATMENT.
2. ELECTROSTATIC APPLICATION OF POWDER SHALL BE FUSION BONDED EPOXY - MORTON PU94175 (DESERT TAN) OR APPROVED EQUAL.
3. HIGH GLOSS - SMOOTH FIELD 180 LB. IMPACT COATING.
4. ALL BOLTS FOR HINGES AND HASP SHALL BE ZINC PLATED TAMPER PROOF.
5. CONTRACTOR SHALL PROVIDE AND INSTALL PROTECTIVE CAGE, COLOR SHALL BE TAN. CLEARANCE SHALL BE A MINIMUM OF 4" (TOP & SIDES). SHOP DRAWINGS TO BE SUBMITTED TO CITY FOR APPROVAL. METAL CAGE SHALL BE LOCKABLE AND MOUNTED ON CONCRETE PAD.

STANDARD SIZES - CENTERLINE DIMENSIONS

GS-1	12" W x 24" H x 24"L	LIFT OFF UNIT
GS-2	12" W x 24" H x 32"L	LIFT OFF UNIT
GS-3	12" W x 24" H x 42"L	HINGED UNIT
GS-4	12" W x 30" H x 48"L	HINGED UNIT

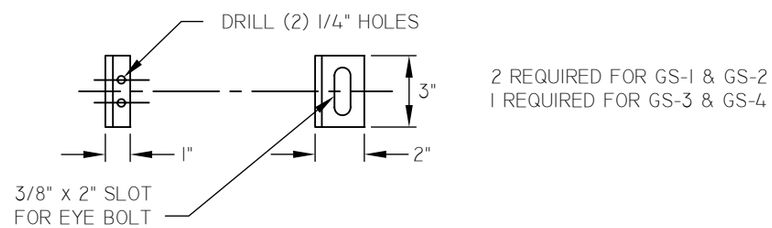

HASP DETAIL

NOT TO SCALE

mesa·az

REDUCED PRESSURE BACKFLOW PREVENTION ASSEMBLY ENCLOSURE - 2" AND SMALLER

DETAIL NO. M-105.02

REV. 1/31/2014

NOTE
ALL UNITS ARE SAME STYLE
AS DRAWING EXCEPT AS NOTED.

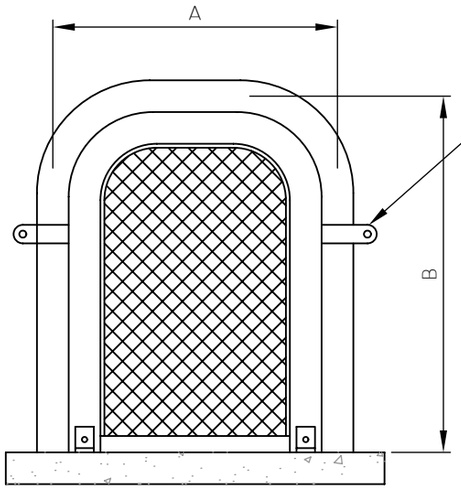

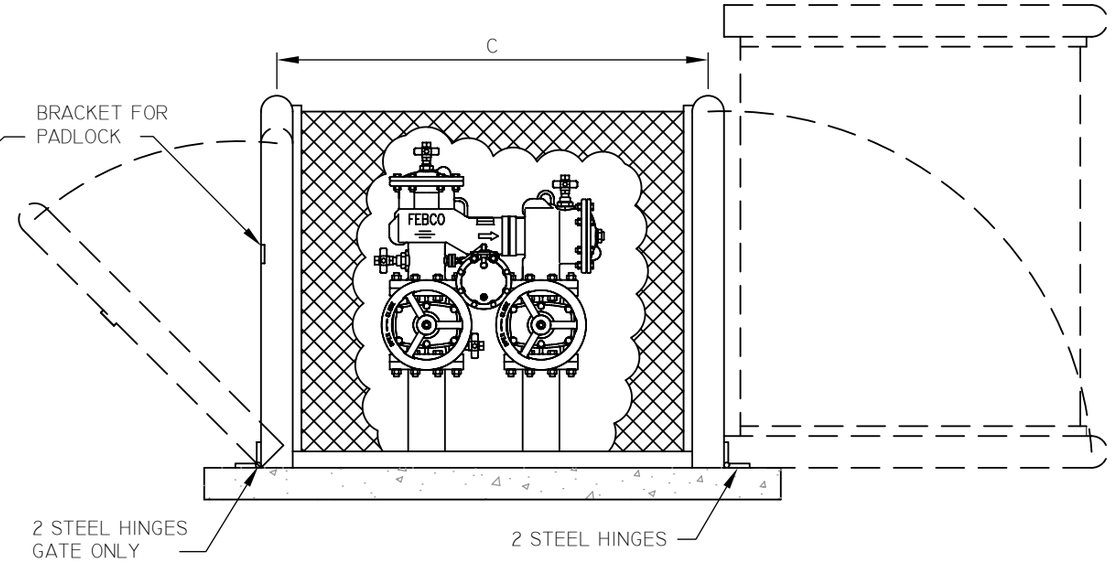

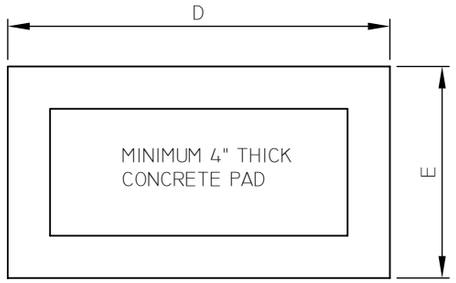

FEBCO 880/870 WILKINS 475/450

	A	B	C	D	E	INSIDE DIMENSIONS	SIZES	SIZES
GS-NP-1	26	40	33 1/4	52	32	24 X 40 X 31 1/4	2-1/2"-3" NRS	4" NRS
GS-NP-1.5	26	40	40 1/4	58	32	24 X 40 X 38 1/4		
GS-NP-2	32	48	48 1/4	64	38	30 X 48 X 46 1/4	2 1/2"-4"OS&Y 6" NRS	6" NRS 4" OS&Y
GS-NP-3	40	60	50	68	46	38 X 60 X 48	6" OS&Y 8"-10" NRS	6" OS&Y

NOT TO SCALE

mesa·az

REDUCED PRESSURE BACKFLOW PREVENTION
ASSEMBLY ENCLOSURE - 2 1/2" AND LARGER

DETAIL NO.
M-105.03

REV. 1/31/2014

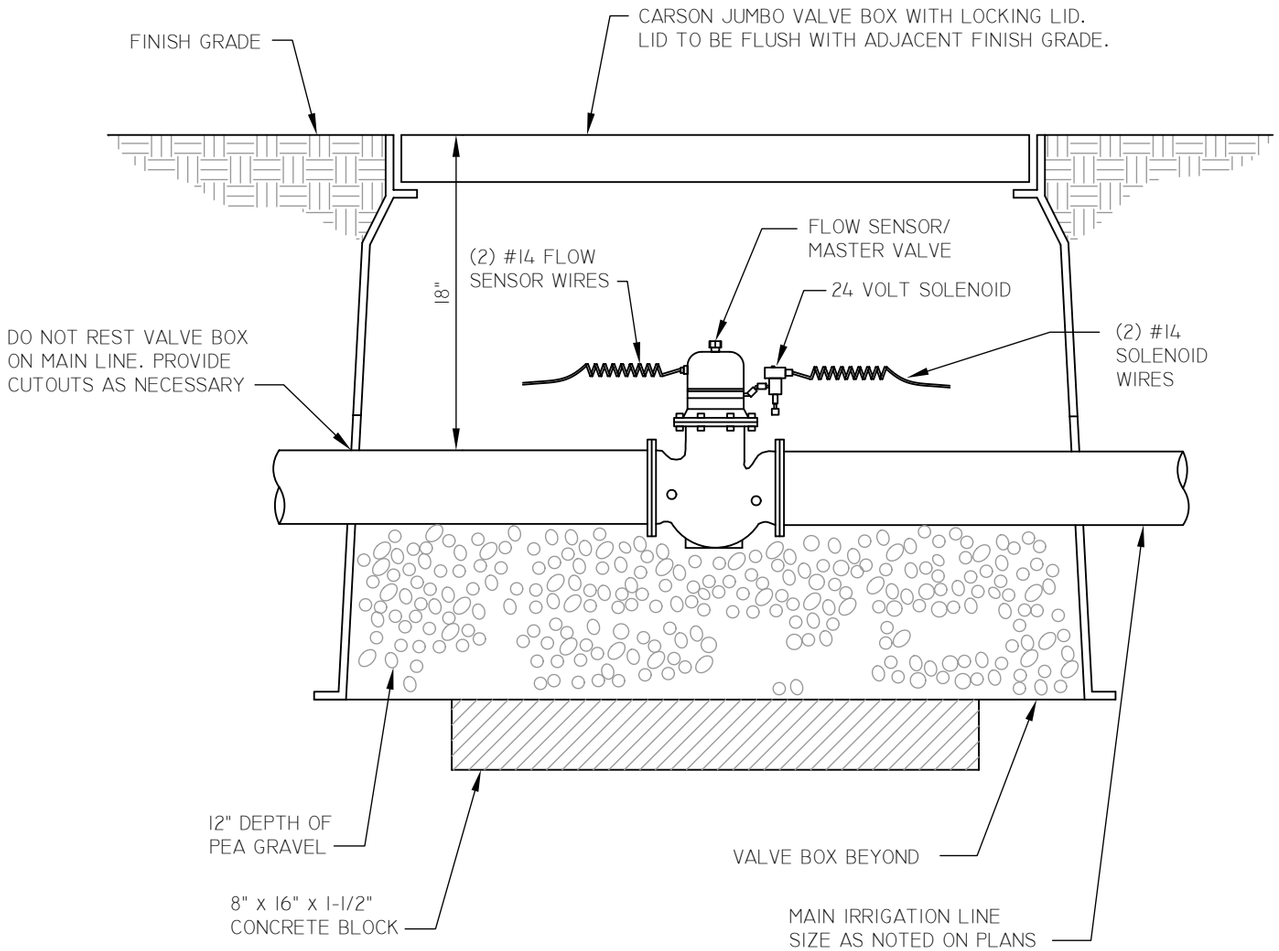

NOTES

1. PROVIDE EXPANSION COILS AT EACH WIRE CONNECTION IN VALVE BOX. (WRAP AROUND 1/2" PIPE 15 TIMES)

2. INSTALL SPARE WIRE TO FLOW SENSOR FROM CONTROLLER FOR FUTURE USE.

3. TO BE USED WITH MOTOROLA 5000 IRRINET AND/OR SCORPIO IRRIGATION SYSTEMS ONLY. (USE RESTRICTED TO CITY OF MESA PARKS AND RETENTION BASINS).

NOT TO SCALE

mesa·az

BERMAD 910 - P - MASTER VALVE / FLOW SENSOR ASSEMBLY

DETAIL NO.
M-105.04

REV. 1/31/2014

FLOW METER SIZE	MINIMUM UPSTREAM DISTANCE	MINIMUM DOWNSTREAM DISTANCE
1"	10"	5"
1.25"	12.5"	6.25"
1.5"	15"	7.5"
2"	20"	10"
3"	30"	15"

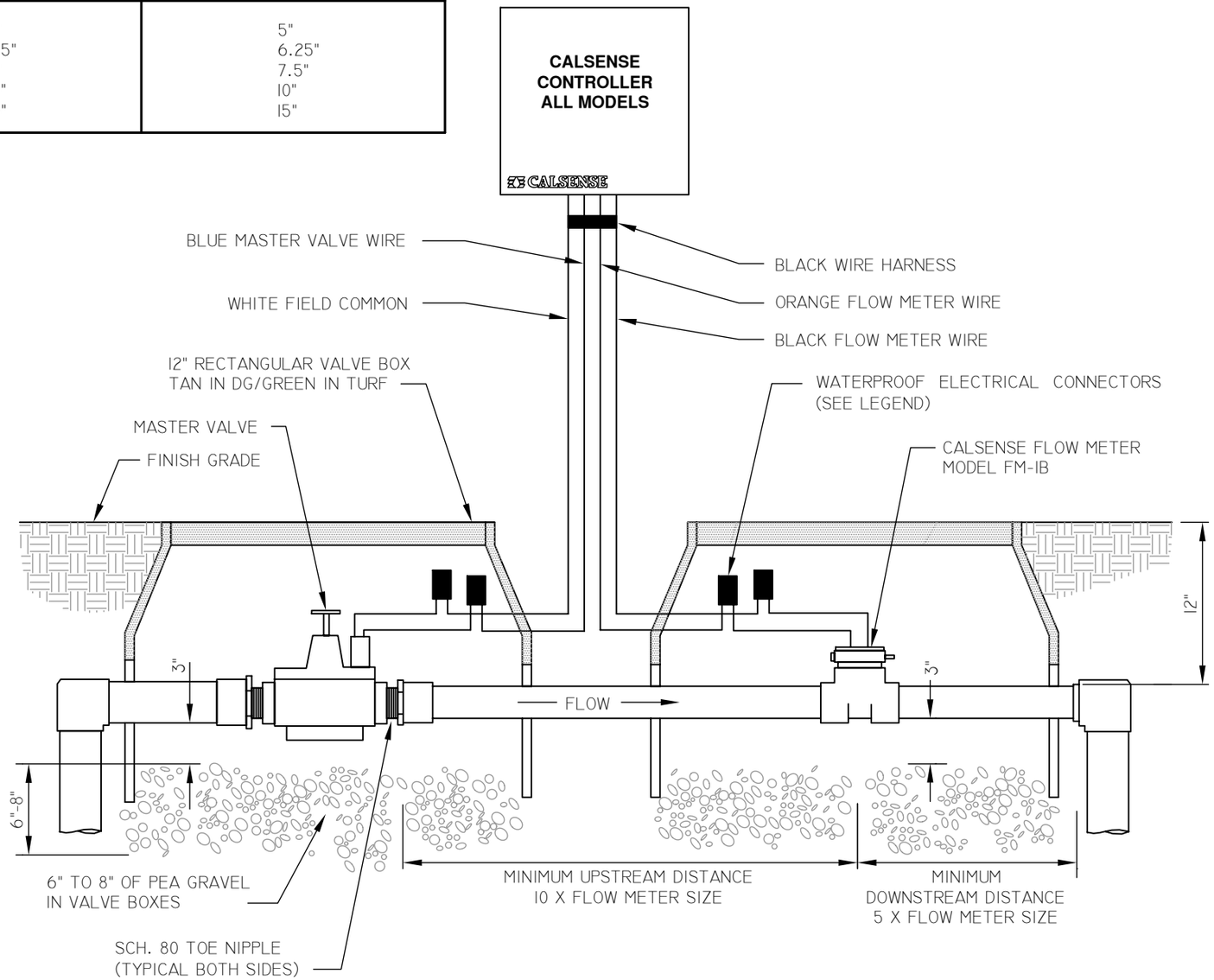

NOT TO SCALE

mesa·az

CALSENSE MASTER VALVE / FLOW SENSOR

DETAIL NO.
M-105.05

REV. 1/31/2014

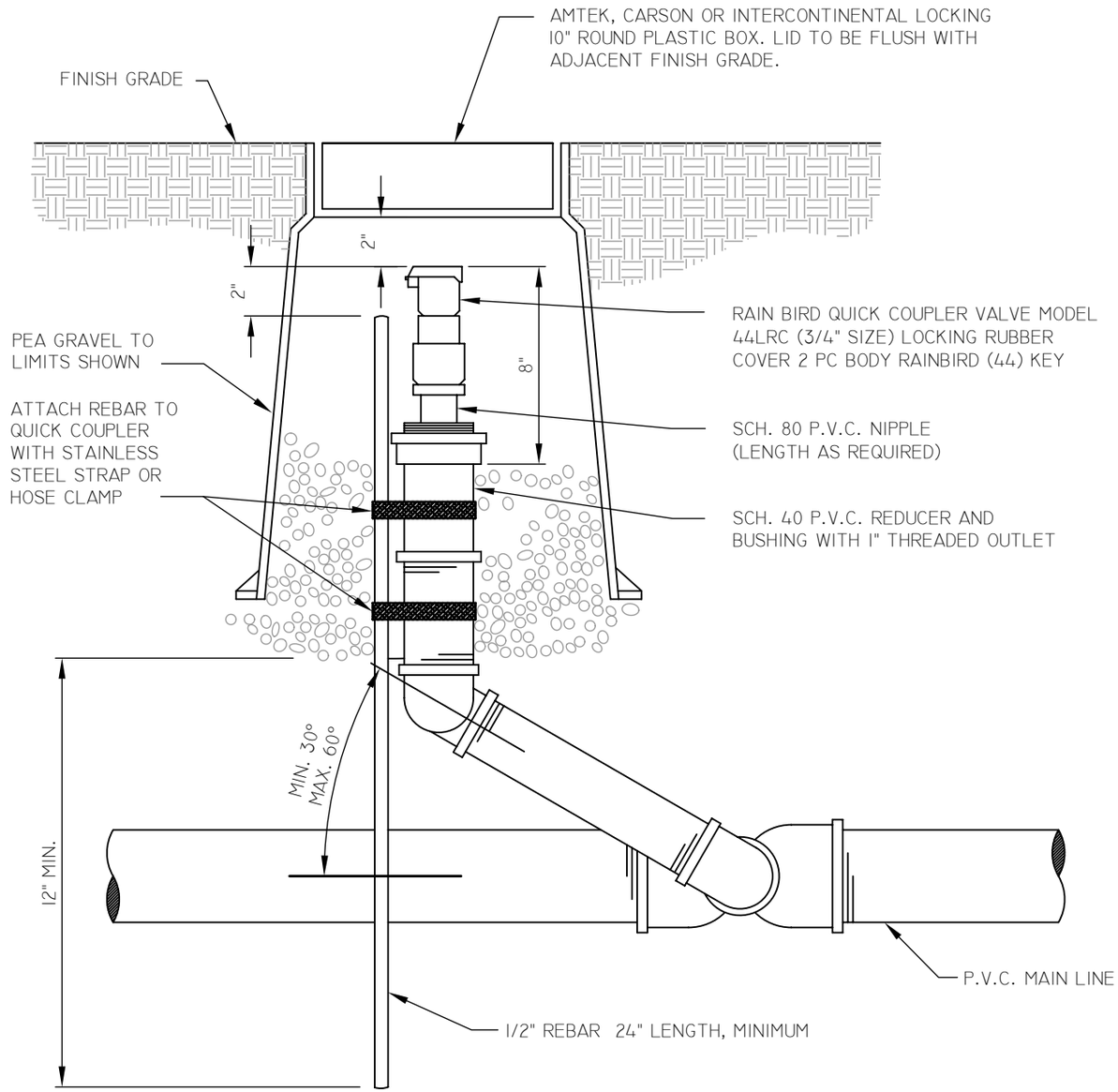

NOT TO SCALE

mesa·az

QUICK COUPLER DETAIL

DETAIL NO.
M-105.06

REV. 1/31/2014

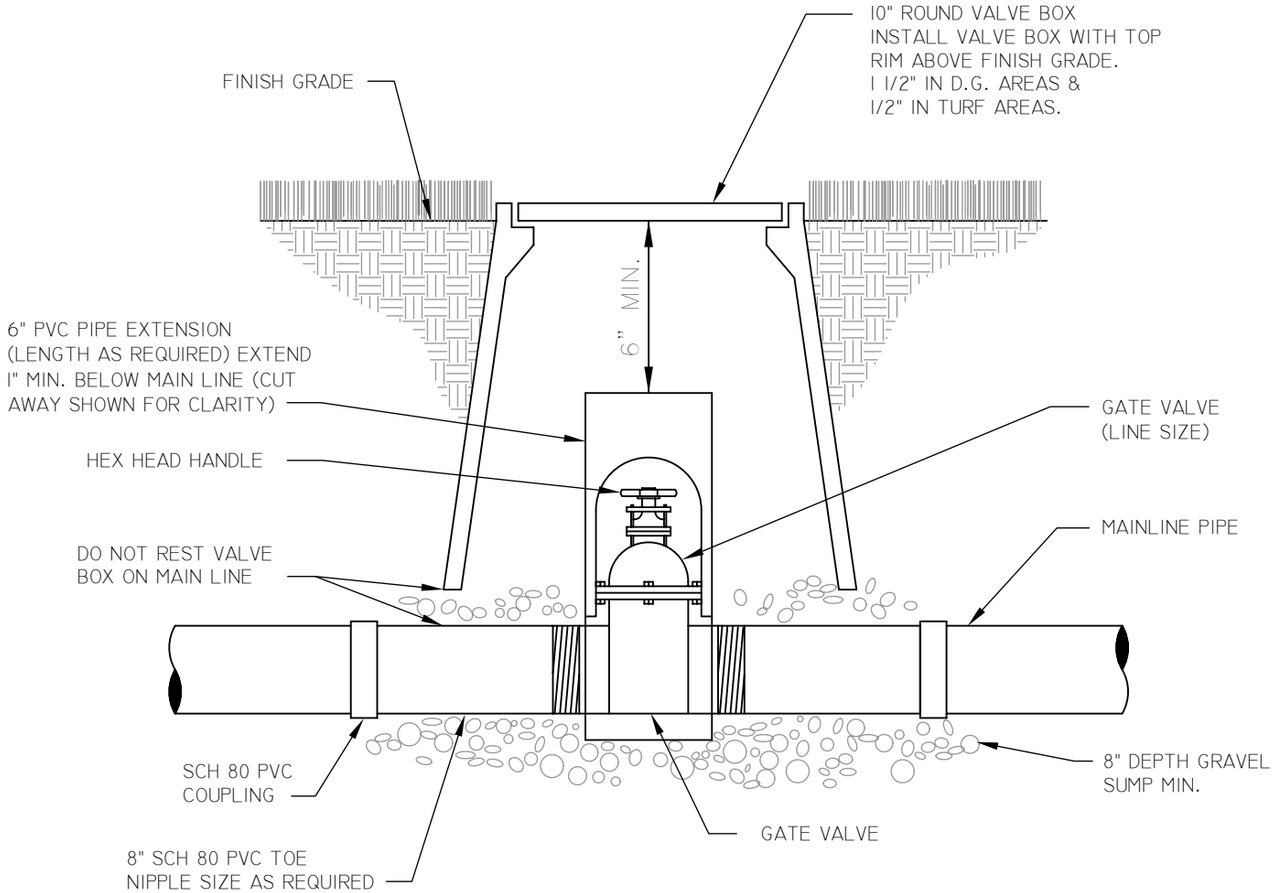

NOTES

1. COMPACT SOIL AROUND CONTROL VALVE PIT ASSEMBLY TO SAME DENSITY AS UNDISTURBED ADJACENT SOIL.
2. IF GATE VALVE IS OVER 5.0 FEET DEEP, USE MAG 391-2 FOR EXTENSION.
3. PROVIDE CITY OF MESA WITH GATE VALVE KEY - LENGTH AS REQUIRED.
4. FOR ALL PIPE 2-1/2" OR SMALLER.

NOT TO SCALE

mesa·az

BRASS GATE VALVE ASSEMBLY
INSTALLED WITH SOLVENT WELD PVC PIPE

DETAIL NO.
M-105.07

REV. 1/31/2014

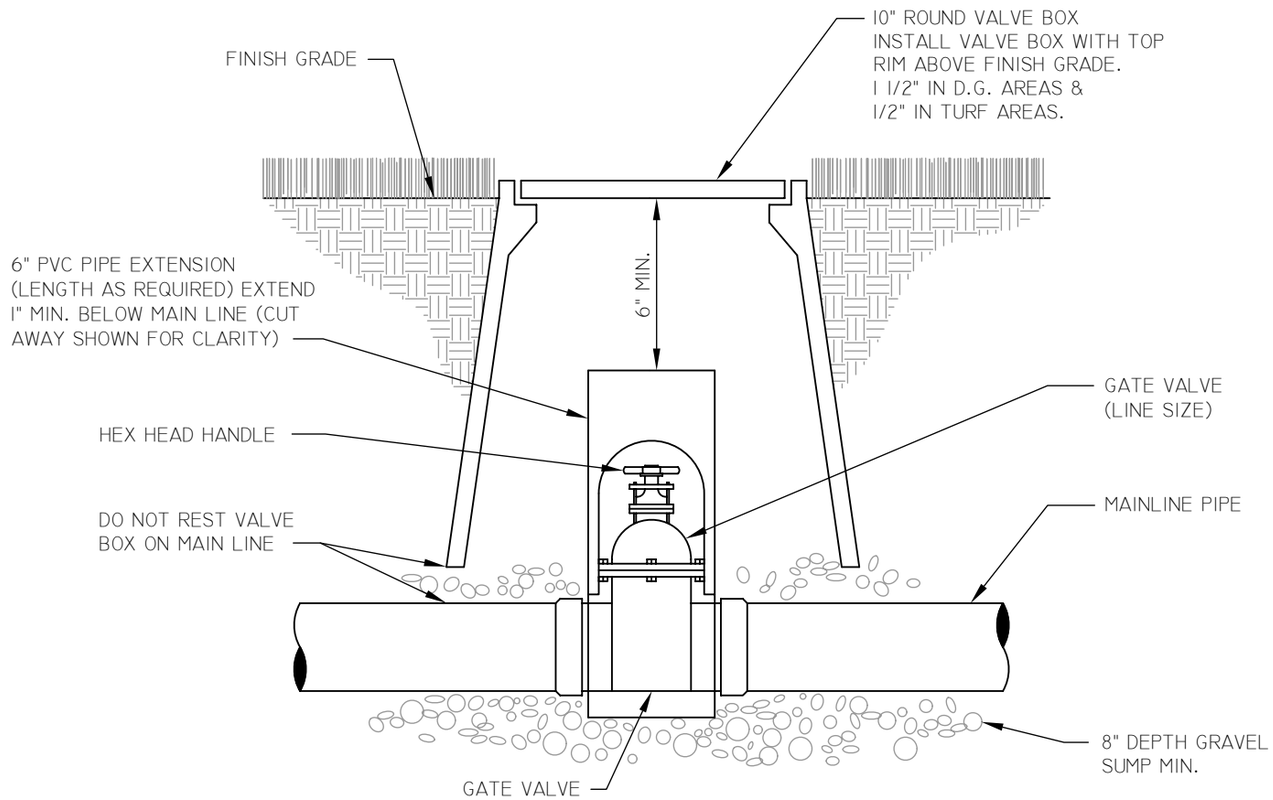

NOTES

1. COMPACT SOIL AROUND CONTROL VALVE PIT ASSEMBLY TO SAME DENSITY AS UNDISTURBED ADJACENT SOIL.
2. IF GATE VALVE IS OVER 5.0 FEET DEEP, USE MAG 391-2 FOR EXTENSION.
3. PROVIDE CITY OF MESA WITH GATE VALVE KEY - LENGTH AS REQUIRED.
4. FOR ALL PIPE 3" OR GREATER.

NOT TO SCALE

mesa·az

GATE VALVE ASSEMBLY
INSTALLED WITH RUBBER RING PIPE

DETAIL NO.
M-105.08

REV. 1/31/2014

MAIN SUPPLY, LATERAL AND WIRING

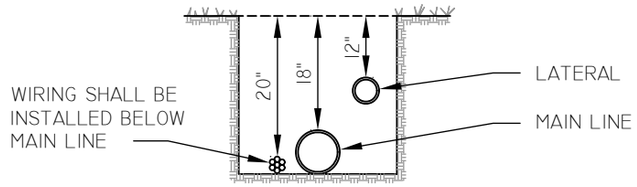

NOTE
TAPE AND BUNDLE WIRING AT 10' INTERVALS.
SPLICED WIRES TO BE IN 10" SPLICE PIT BOXES.

MAIN SUPPLY

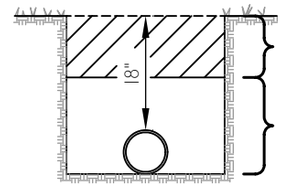

FINAL BACKFILL
6" CLEAN TOPSOIL

BACKFILL PIPE BEDDING COVER TO BE 3/8" MINUS MATERIAL TYPICAL ALL TRENCHES. COMPACT TO 95% UNDER ALL CONCRETE AND ASPHALT AND 85% IN PLANTER AREAS.

NOTE
ALL MAIN SUPPLY LINES TO BE INSTALLED IN ACCORDANCE WITH MANUFACTURER'S INSTALLATION SPECIFICATIONS.

LATERAL

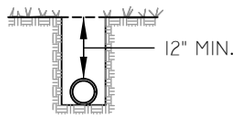

NOTE
ALL PLASTIC PIPING TO BE SNAKED IN TRENCHES AS SHOWN.

120 VOLT

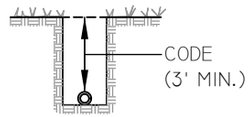

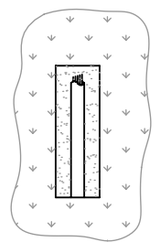

NOTES
ALL 120 VOLT WIRING IN CONDUIT TO BE INSTALLED IN ACCORDANCE WITH LOCAL CODE.

APPROVED "ELECTRICAL POWER WIRES BELOW" WARNING TAPE SHALL BE INSTALLED 12" ABOVE ALL POWER WIRING IN TRENCHES.

CONTROL WIRING

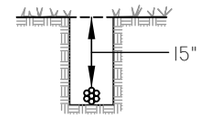

WIRE LEGEND
RED=CONTROLLER
BLUE=MASTER VALVE
BLACK/ORANGE=FLOW METER
WHITE=COMMON
GREEN=EXTRA

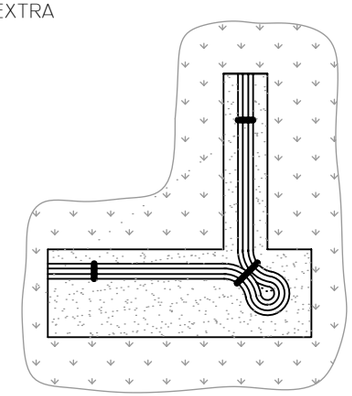

NOTE
NO TRENCH TO BE CLOSER THAN 18" TO CONCRETE SIDEWALK, CURBS, ELECTRIC POLES, J-BOXES, ELECTRIC CABINETS, STREET SIGNALS, SIGNS, ETC.

NOTE
TIE A LOOSE 20" LOOP IN ALL WIRING AT CHANGES OF DIRECTION GREATER THAN 30° AND AT EACH END OF WIRE SLEEVES. UNTIE ALL LOOPS AFTER ALL CONNECTIONS HAVE BEEN MADE.

NOT TO SCALE

mesa·az

TYPICAL TRENCHING DETAIL

DETAIL NO.
M-106.01

REV. 1/31/2014

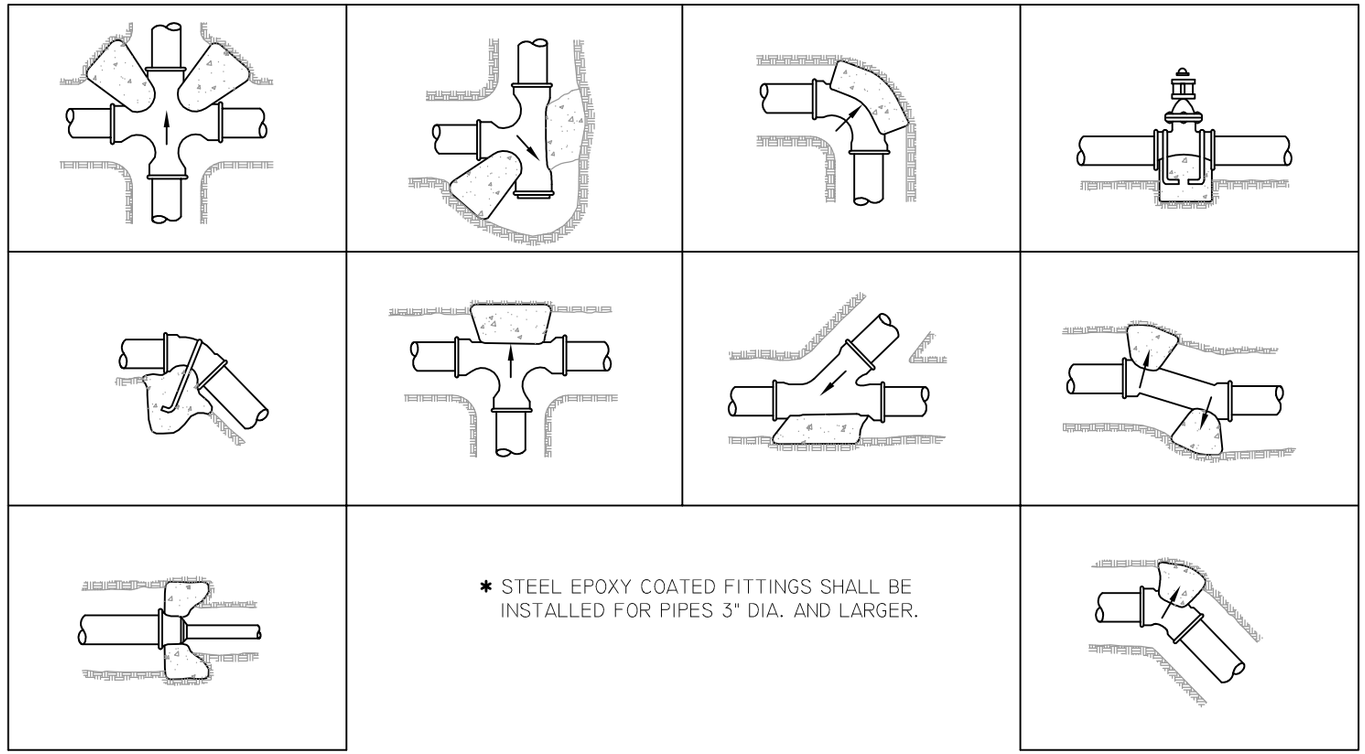

INSTALLATION NOTES

1. ALL MAIN LINE TO BE INSTALLED AND TESTED ACCORDING TO MANUFACTURER'S INSTALLATION INSTRUCTIONS. SEE ALSO MAG STD. DETAIL 380.
2. ALL TRENCH DEPTH AND WIDTH SHALL BE AS SHOWN ON THE TYPICAL TRENCHING DETAIL.
3. CONTRACTOR TO PROVIDE AND INSTALL 'POLY PLASTIC' (6 MIL. MINIMUM THICKNESS) BETWEEN "ALL" CONCRETE THRUST BLOCKS AND FITTINGS.

NOTES

1. SEE MAG STD. DETAIL 380 FOR SIZING INFORMATION.
2. DOES NOT APPLY TO PUBLIC WATER MAINS.

NOT TO SCALE

mesa·az

TYPICAL LANDSCAPE IRRIGATION THRUST BLOCK DETAILS

DETAIL NO.
M-106.02

REV. 02/11/2015

STEP 1

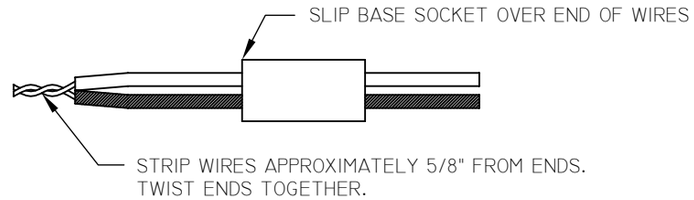

STEP 2

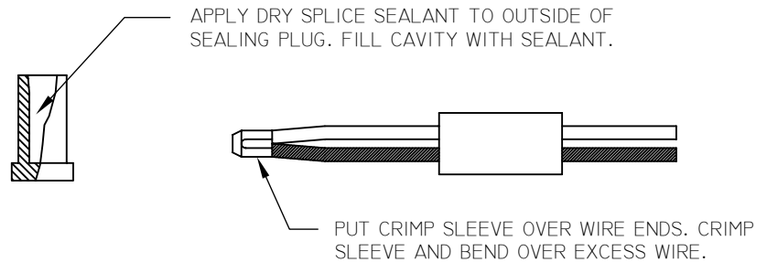

STEP 3

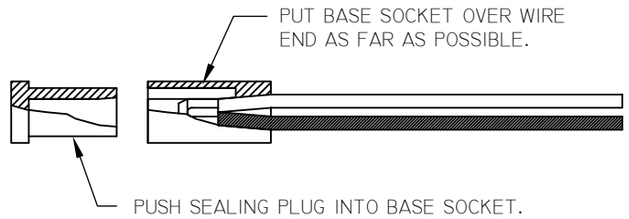

STEP 4

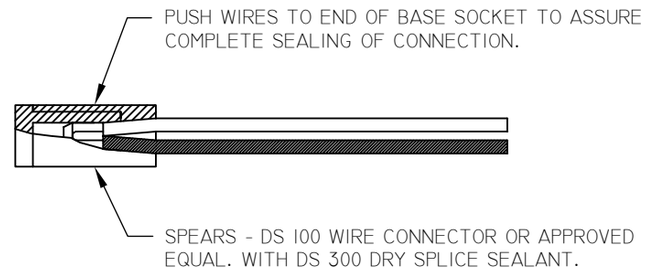

NOTE

1. FOR WIRE SIZES NO.14, NO.12, AND NO.10

NOT TO SCALE

mesa·az

TYPICAL WIRE CONNECTION DETAIL

DETAIL NO.
M-106.03

REV. 1/31/2014

SYMBOL	DESCRIPTION	REMARKS
M	WATER METER	
	REDUCED PRESSURE PRINCIPLE BACKFLOW PREVENTION UNIT	
QC	QUICK COUPLER	
	MASTER VALVE / FLOW METER	F/M WITH MOTOROLA OR CALSENSE ONLY
	MASTER VALVE	
C	CONTROLLER 'X'	
R	ISOLATION GATE VALVE	FOR ALL RUBBER RING PIPE 3" OR GREATER
	BRASS ISOLATION GATE VALVE	FOR ALL SOLVENT WELD PIPE
	REMOTE CONTROL VALVE - SPRINKLERS / BUBBLERS	
	REMOTE CONTROL VALVE - DRIP ASSEMBLY	
———	MAIN LINE - SCHEDULE 40	ALL FITTINGS SCHEDULE - 80
------- S -------	SHRUB LATERAL - CLASS 200	SHRUB LATERAL 3/4 " MIN.
— — — — T — — — —	TREE LATERAL - CLASS 200	TREE LATERAL 3/4" MIN. LAWN LATERAL AS NOTED ON PLANS
----------	SCHEDULE 40 PVC SLEEVE	SIZE AS NOTED ON PLANS
	EMITTER	
	BUBBLER	
	MANUAL FLUSH VALVE	
E	EXISTING IRRIGATION VALVE BOX	

mesa·az

IRRIGATION LEGEND

DETAIL NO.
M-106.04

REV. 01/31/2014

FRICTION LOSS

PRESSURE AT SITE SOURCE VERIFIED WITH CITY	PSI	_____
FRICTION LOSS THROUGH: (TO FARTHEST HEAD)*		
WATER METER	PSI	_____
REDUCED PRESSURE VACUUM BREAKER	PSI	_____
MAIN LINE PIPE	PSI	_____
VALVE	PSI	_____
LATERAL LINE PIPE	PSI	_____
* TOTAL FRICTION LOSS	PSI	_____
* REQUIRED PRESSURE AT HEAD	PSI	_____
(TOTAL FRICTION LOSS)+(REQUIRED PSI AT HEAD)		
* PRESSURE REQUIRED AT SOURCE	PSI	_____

CALCULATIONS DONE BY _____ _____

SIGNED DATE

NOTES

1. SEE ALSO LANDSCAPE AND IRRIGATION STANDARDS SECTION 2 AUTOMATIC IRRIGATION SYSTEMS 2.8 - PIPING, FOR CALCULATIONS FOR LARGEST GALLONS PER MINUTE (G.P.M.) FLOW CIRCUIT.
2. REMOTE CONTROL VALVE TURF AND/OR DRIP ASSEMBLY SHALL BE DESIGNED TO A MINIMUM 3 G.P.M.
3. OPERATING PRESSURE FOR DRIP IRRIGATION SYSTEM SHALL BE 20-25 PSI TYPICALLY.

mesa·az

FRICTION LOSS CALCULATIONS

DETAIL NO.
M-106.05

REV. 01/31/2014

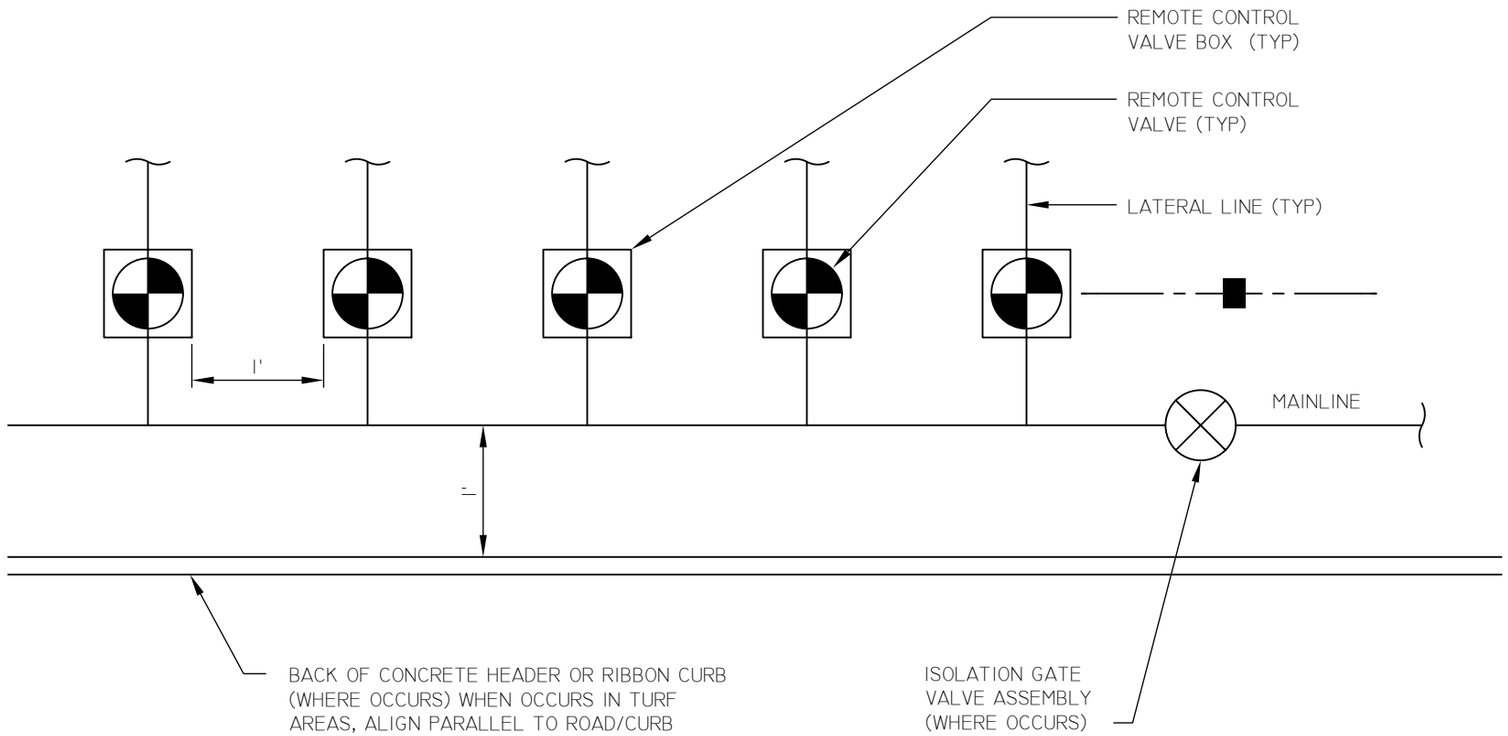

NOTE

1. VALVE AND VALVE BOX TO BE LAID OUT UNIFORMLY AND GROUPED TOGETHER WHENEVER POSSIBLE.

NOT TO SCALE

mesa·az

VALVE MANIFOLD DETAIL

DETAIL NO.
M-107.01

REV. 1/31/2014

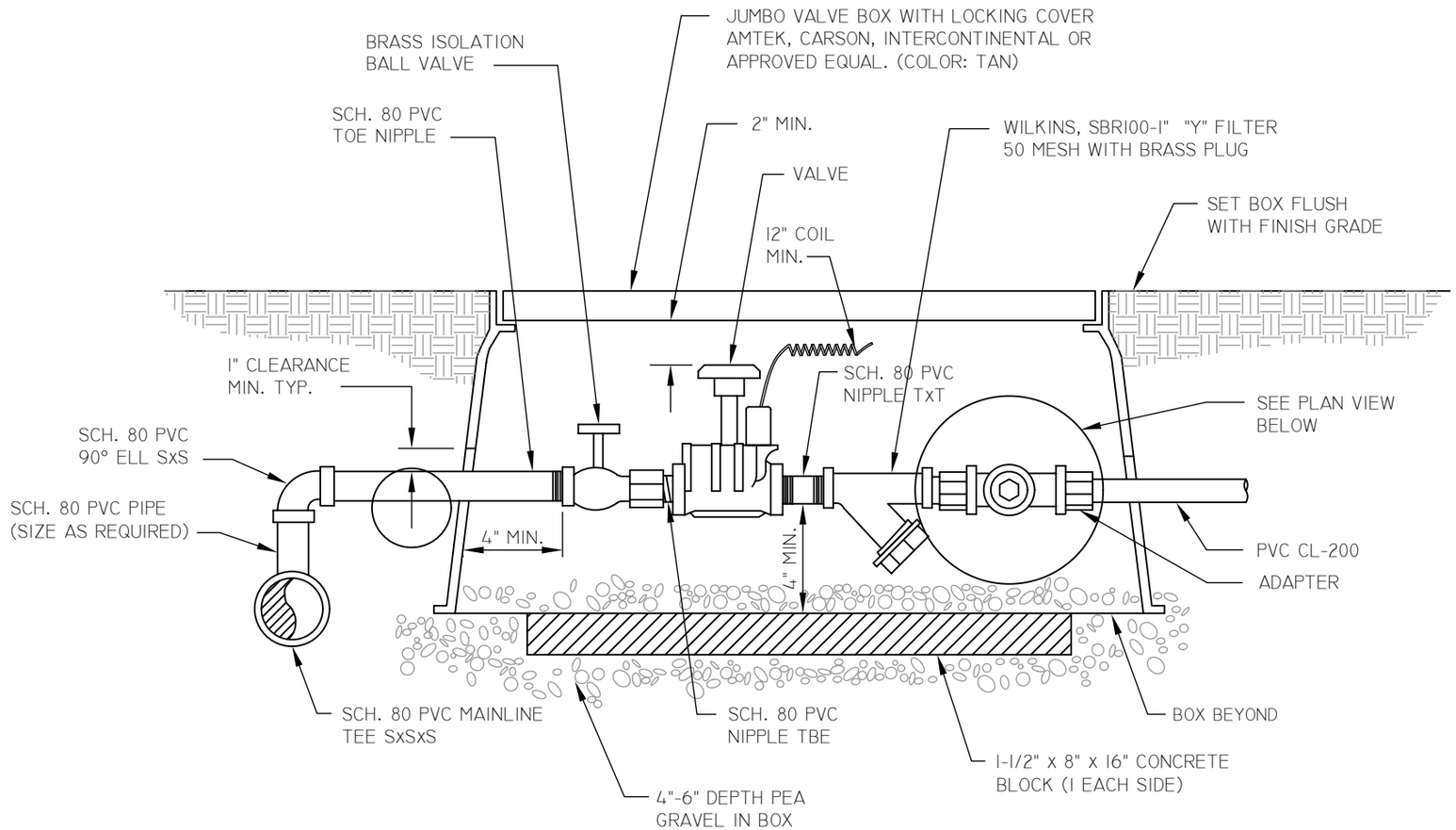

NOTES

1. PROVIDE EXPANSION COILS AT EACH WIRE CONNECTION IN VALVE BOX. (WRAP AROUND 1/2" PIPE 15 TIMES)
2. DO NOT REST VALVE BOX ON MAIN LINE OR LATERAL LINE.
3. INSTALL REGULATOR HORIZONTALLY TO ENSURE GAUGE CAN BE READ AND ADJUSTED EASILY.

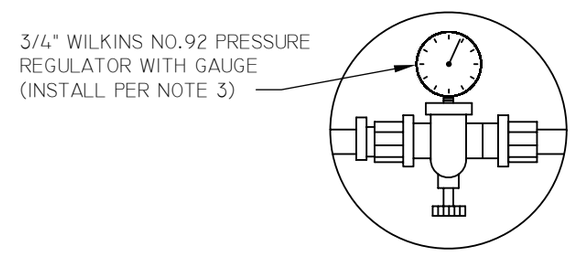

PRESSURE REGULATOR
PLAN VIEW

NOT TO SCALE

mesa·az

DRIP VALVE WITH FILTER AND PRESSURE REGULATOR ASSEMBLY

DETAIL NO.
M-108.01

REV. 1/31/2014

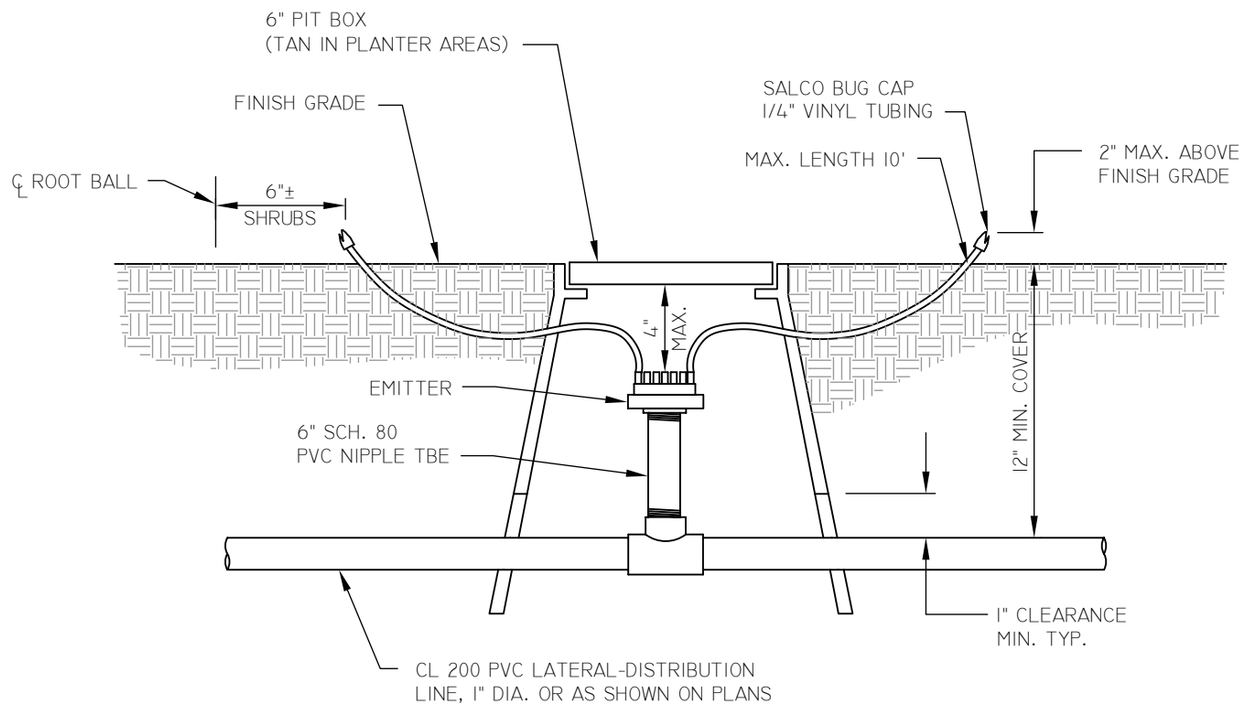

NOT TO SCALE

mesa·az

DRIP SYSTEM - EMITTER DETAIL

DETAIL NO.
M-108.02

REV. 1/31/2014

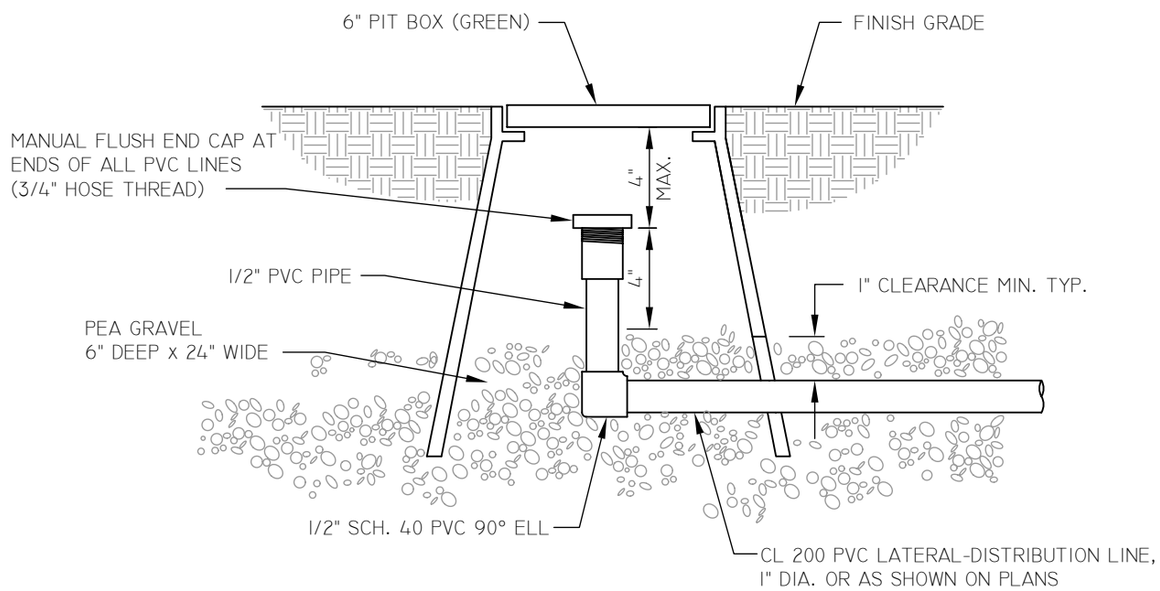

NOT TO SCALE

mesa·az

DRIP SYSTEM - MANUAL FLUSH END CAP ASSEMBLY

DETAIL NO.
M-108.03

REV. 1/31/2014

EMITTER SCHEDULE: OPERATION AT 20-25 PSI

(1) BOWSMITH (MULTI) ML210 OR EQUAL (PER 5 TO 6 SHRUBS)

(1) BOWSMITH (SINGLE) SL 1 GPH OR EQUAL (PER EACH SHRUB)

(1) BOWSMITH (MULTI) ML220 OR EQUAL (PER EACH TREE)

FOR 15 GALLON TREES

3 OUTLETS EQUALLY SPACED AROUND TREE / 8"-10"± FROM TREE TRUNK

FOR 24" BOX TREES

4 OUTLETS EQUALLY SPACED AROUND TREE / 10"-12"± FROM TREE TRUNK

FOR EACH 12" INCREASE IN BOX - PROVIDE "1" ADDITIONAL OUTLET
(MAINTAIN EQUAL SPACING OF OUTLETS)

EMITTER SCHEDULE

TYPE	TOTAL FLOW	SIZE	QUANTITY	FLOW PER OUTLET	OUTLETS OPEN
TREES	6 GPH	15 GALLON	1 EM.	2 GPH	3
	8 GPH	24" BOX	1 EM.	2 GPH	4
	10 GPH	36" BOX	1 EM.	2 GPH	5
	12 GPH	48" BOX	1 EM.	2 GPH	6
	16-24 GPH	56" BOX AND LARGER	2 EM.	2 GPH	8-12
SHRUBS	1 GPH	1 GALLON	1 EM.	1 GPH	1
	1 GPH	5 GALLON	1 EM.	1 GPH	1
	3 GPH	15 GALLON	1 EM.	1 GPH	3
LOW WATER USE SHRUBS	.6 GPH	1 GALLON	1 EM.	.6 GPH	1
	.6 GPH	5 GALLON	1 EM.	.6 GPH	1

mesa·az

20-25 PSI EMITTER SCHEDULE

DETAIL NO.
M-108.04

REV. 1/31/2014

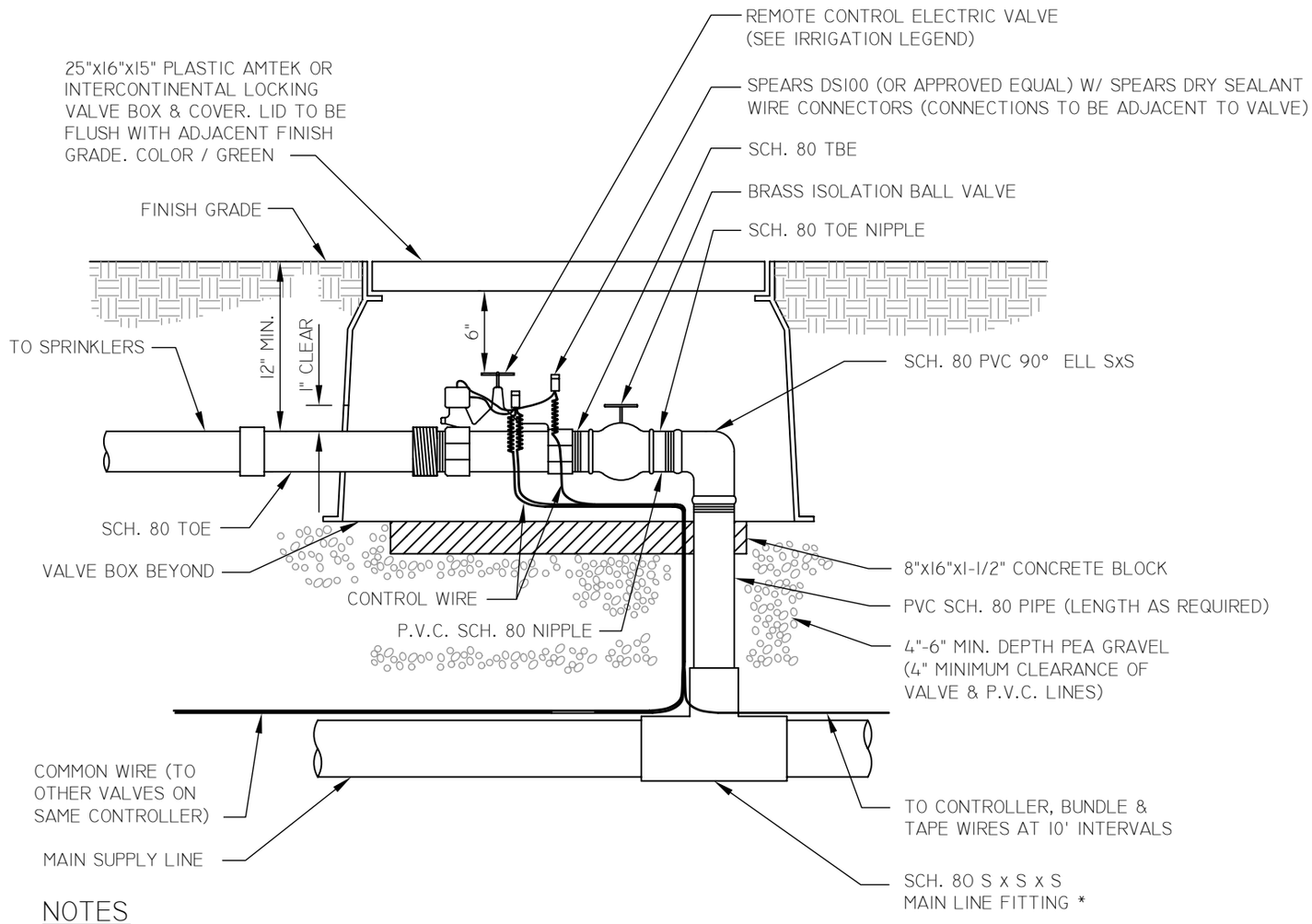

NOTES

1. PROVIDE EXPANSION COILS AT EACH WIRE CONNECTION IN VALVE BOX. (WRAP AROUND 1/2" PIPE 15 TIMES)
2. COMPACT SOIL AROUND VALVE BOX TO SAME DENSITY AS UNDISTURBED ADJACENT SOIL.
3. DO NOT REST VALVE BOX ON MAIN OR LATERAL LINE.

* MAIN LINE FITTINGS FOR MAIN LINES 3" AND LARGER SHALL BE EPOXY COATED STEEL.

NOT TO SCALE

mesa·az

REMOTE CONTROL VALVE ASSEMBLY

DETAIL NO.
M-109.01

REV. 1/31/2014

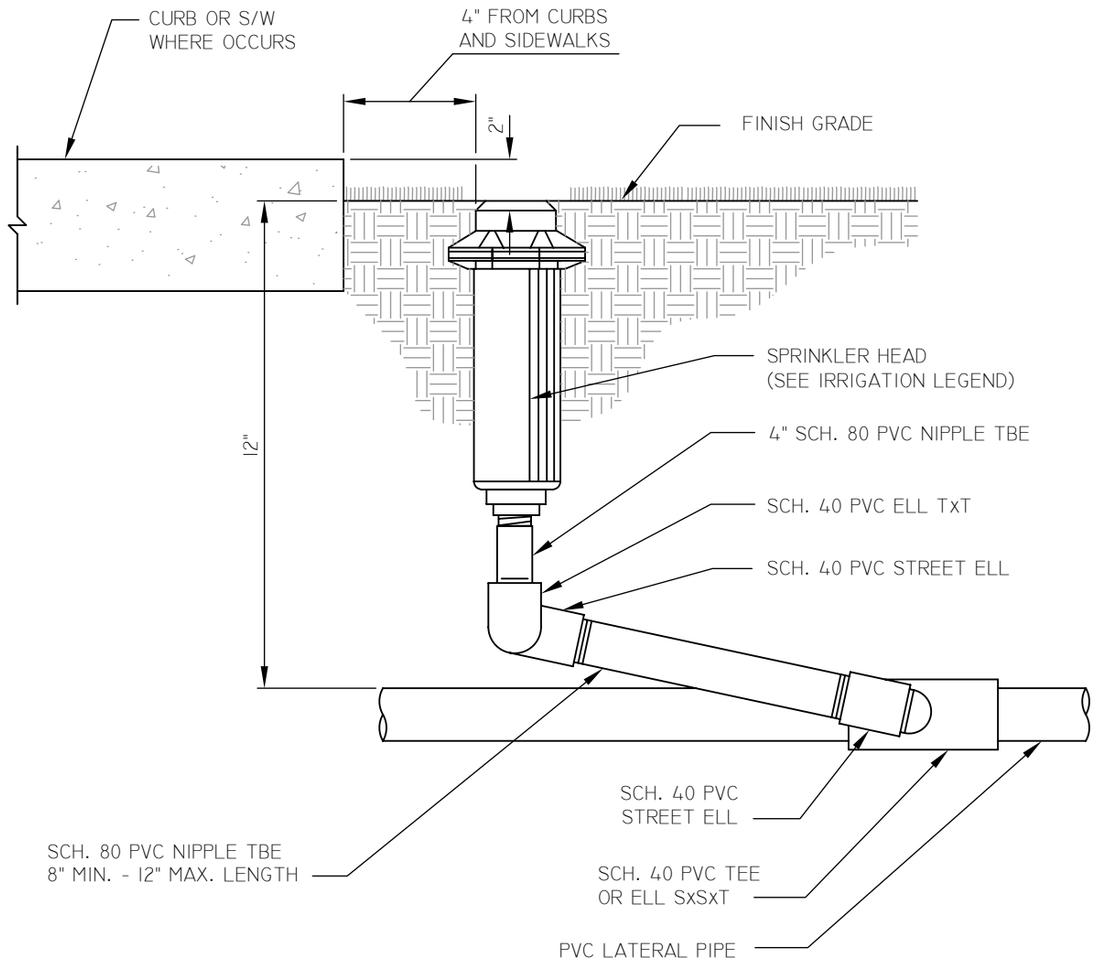

NOTE

1. COMPACT AREA AROUND SPRINKLER HEAD AND TRENCH TO 85%.

NOT TO SCALE

mesa·az

SPRINKLER HEAD WITH SWING JOINT ASSEMBLY

DETAIL NO.
M-109.02

REV. 1/31/2014

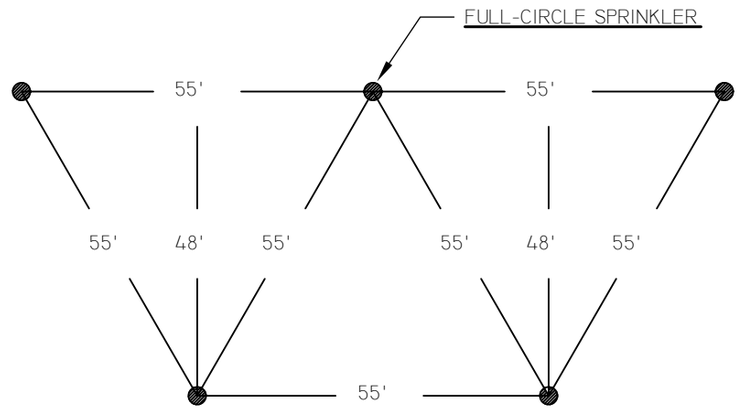

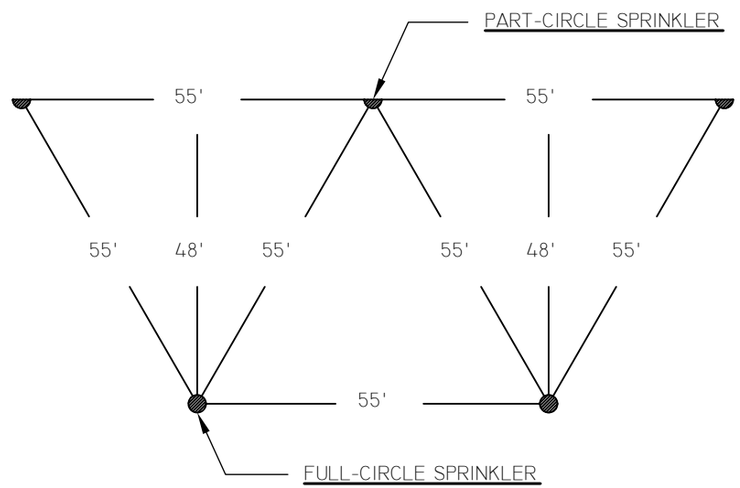

NOTES

1. THIS IS INTENDED AS A GUIDE ONLY. ACTUAL SPRINKLER HEAD SPACINGS TO BE AS SPECIFIED ON THE PLANS.
2. TYPICAL SPACING FOR HUNTER I-40 SHOWN.
3. SEE SPRINKLER HEAD DETAIL(S)

NOT TO SCALE

mesa·az

SPRINKLER HEAD SPACING DETAIL

DETAIL NO.
M-109.03

REV. 01/31/2014

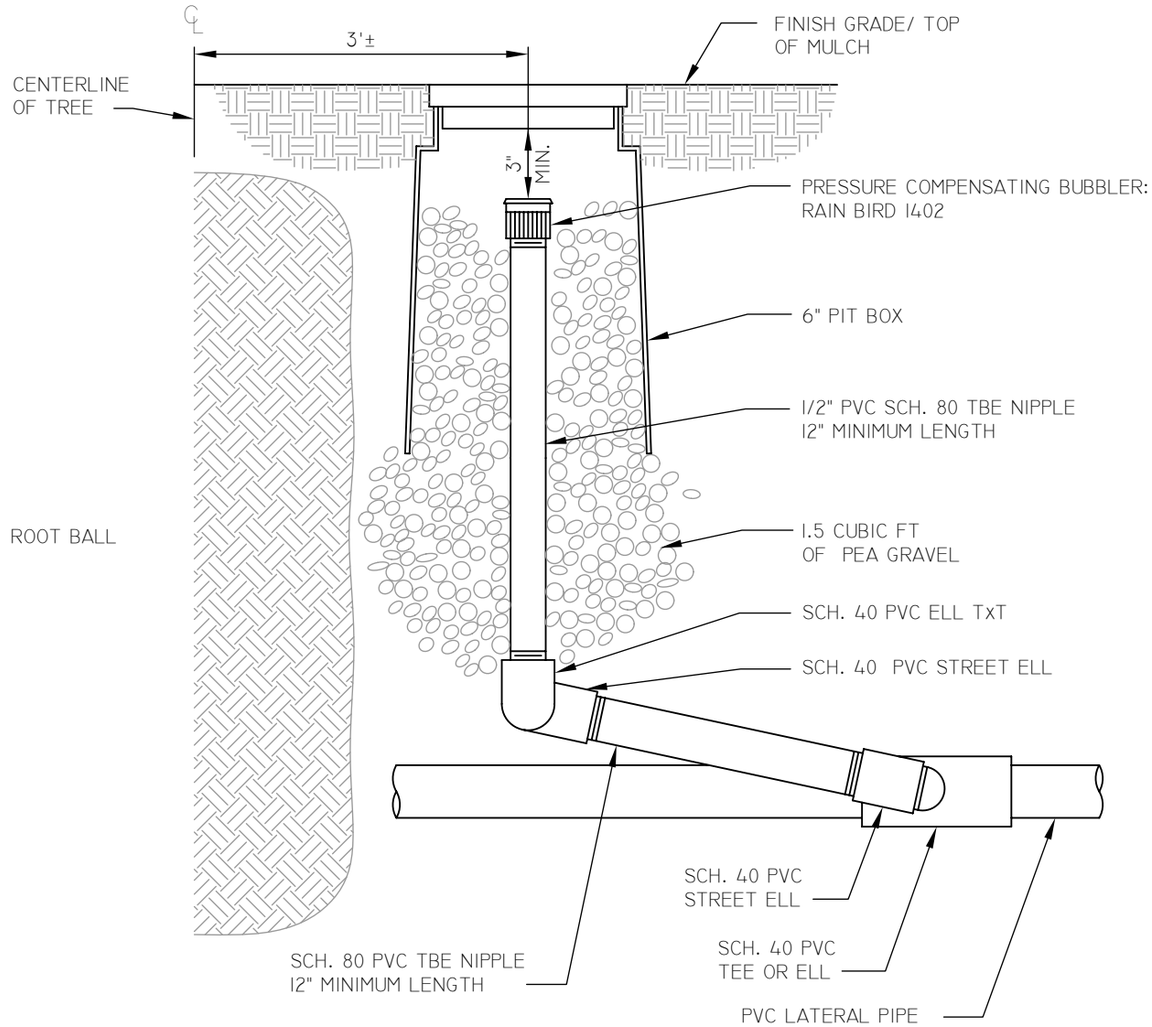

NOTES

1. ALL FITTINGS AND COMPONENTS OF SWING JOINT ASSEMBLY SHALL BE THE SAME NOMINAL SIZE AS BUBBLER INLET.
2. BUBBLER ASSEMBLIES SHALL BE INSTALLED APPROXIMATELY 3-FEET FROM CENTERLINE OF TREE.
3. TEFLON TAPE ALL THREADED CONNECTIONS.

NOT TO SCALE

mesa·az

TREE BUBBLER ASSEMBLY

DETAIL NO.
M-110.01

REV. 1/31/2014

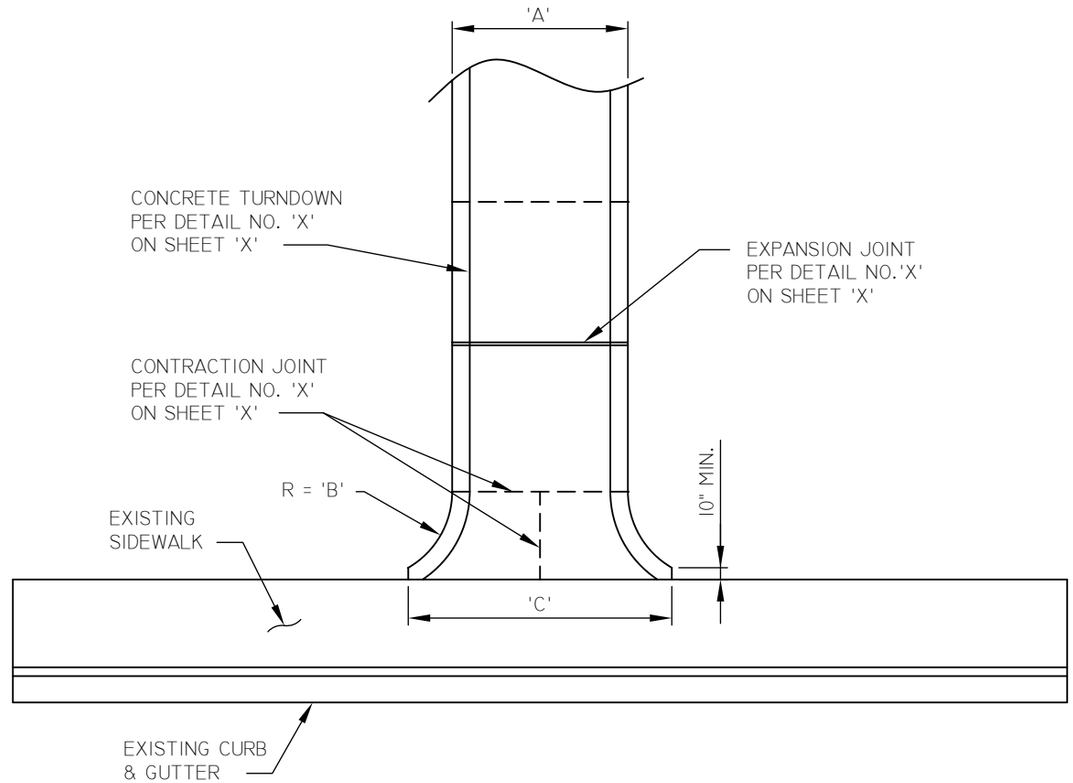

A = WIDTH PER PLAN
B = 1/2 OF 'A'
C = 1-1/2 OF 'A'

NOT TO SCALE

APPROACH WALK

DETAIL NO.
M-111.01

REV. 1/31/2014

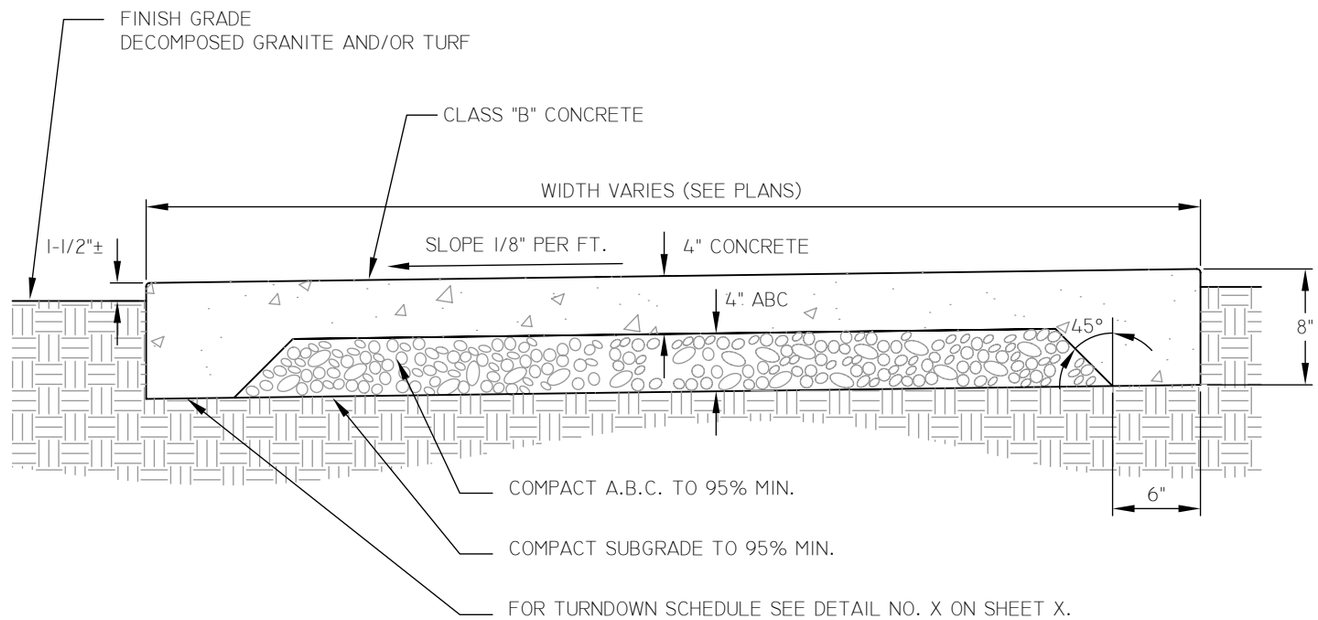

NOTE

1. CONSTRUCT WALK PER MAG DETAIL 230, CITY OF MESA AMMENDMENTS AND AS DETAILED ABOVE AND ON PLANS.

NOT TO SCALE

mesa·az

WALKWAY DETAIL

DETAIL NO.
M-111.02

REV. 1/31/2014

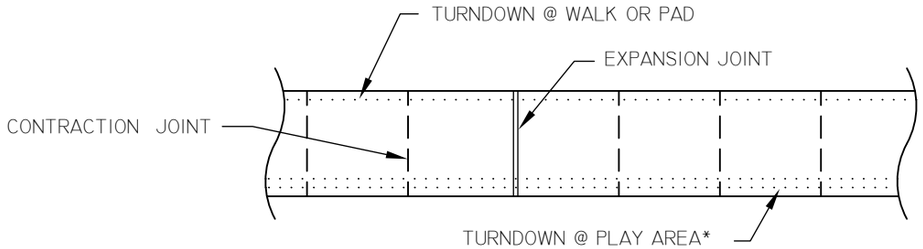

EXPANSION JOINT SEE DETAIL X ON THIS SHEET
CONTRACTION JOINT - SEE DETAIL X ON THIS SHEET
TURNDOWNS VARY - SEE TURNDOWN SCHEDULE BELOW
TURNDOWNS AT PLAY AREAS ARE INDICATED WITH A DOUBLE LINE

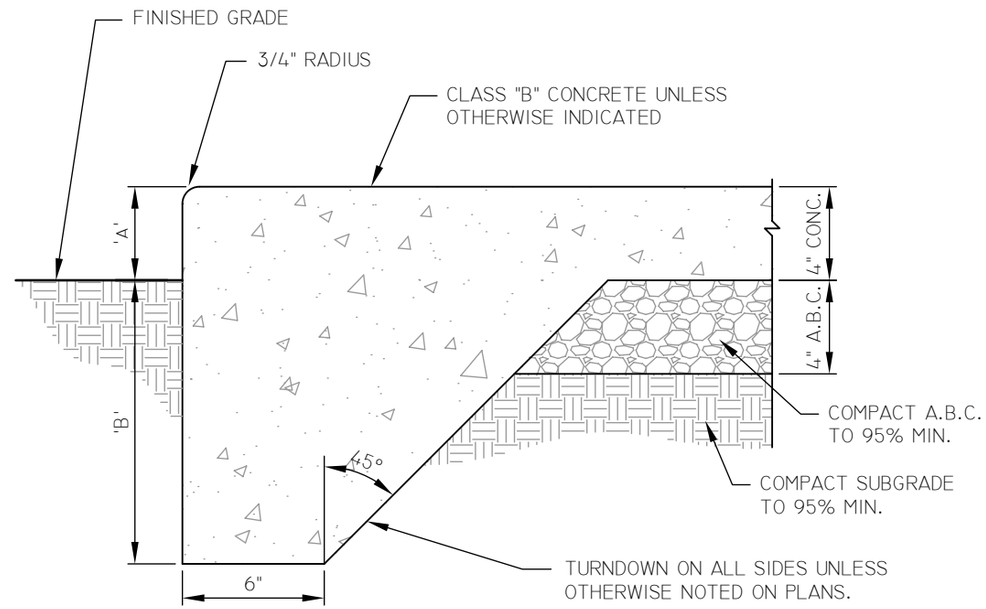

TURNDOWN SCHEDULE

TURNDOWN AREA	'A'	'B'	TOTAL
*PLAY AREA (TOP OF SAND)	4"	12"	16"
*PLAY AREA (ENGINEERED WOOD FIBER)	1/2"	17-1/2"	18"
BASKETBALL COURT	1-1/2"	6-1/2"	8"
RAMADA	1-1/2"	6-1/2"	8"
WALK	1-1/2"	6-1/2"	8"

NOT TO SCALE

mesa·az

CONCRETE TURNDOWN - TYPICAL PARK APPLICATION

DETAIL NO.
M-111.03

REV. 1/31/2014

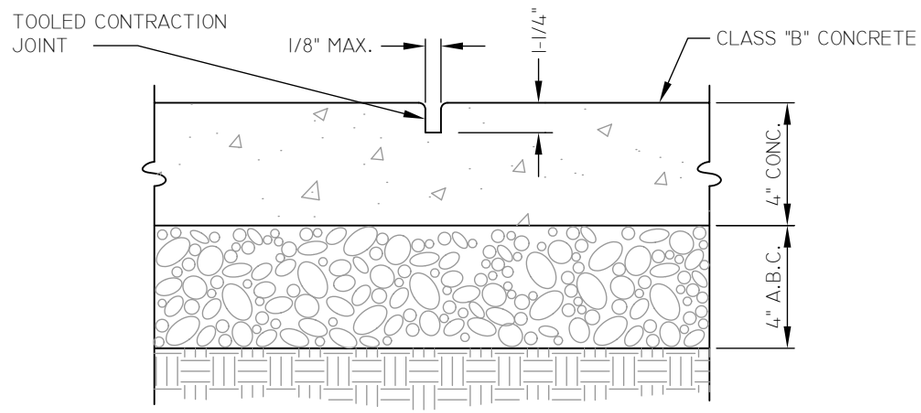

NOT TO SCALE

mesa·az

CONTRACTION JOINT - TYPICAL

DETAIL NO.
M-111.04

REV. 1/31/2014

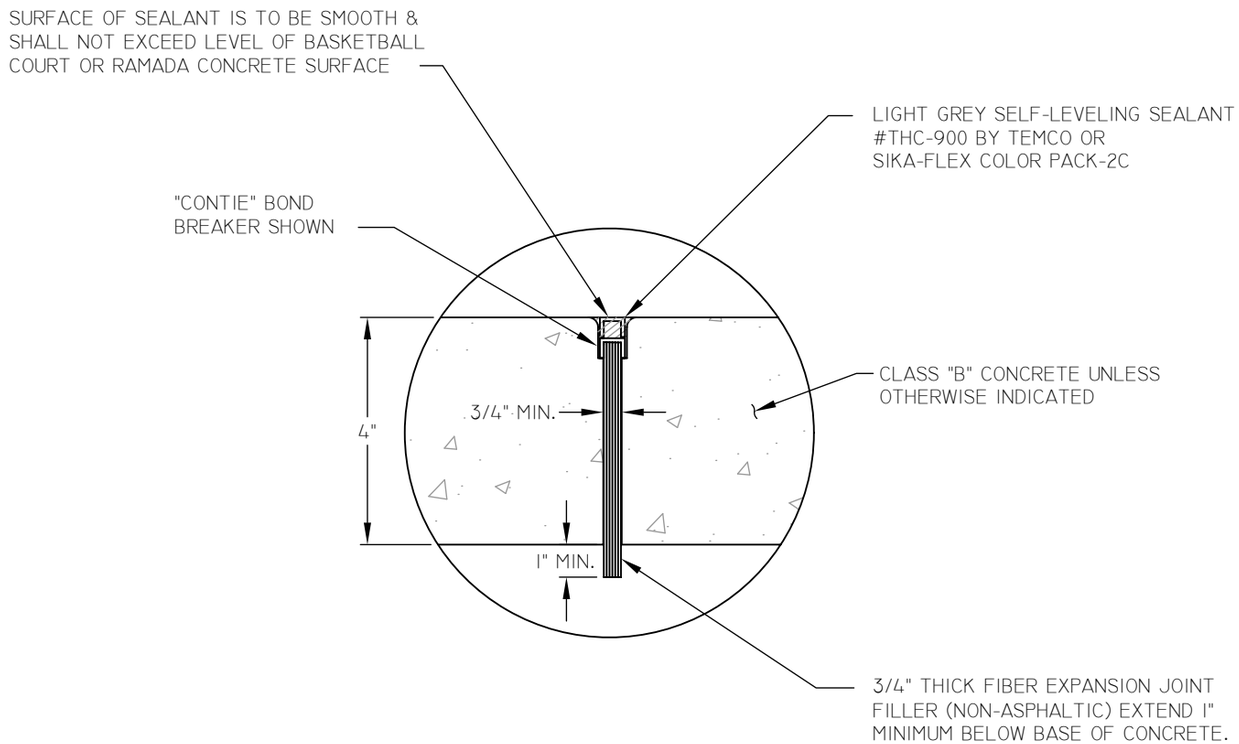

NOTE

1. CAULKING REQUIRED FOR BASKETBALL COURT & RAMADAS. INSTALL STANDARD 1/2" ASPHALTIC FIBER EXPANSION JOINT FOR ALL PARK WALKWAYS. (TOP OF EXPANSION JOINT MATERIAL 1/4" MAX. BELOW TOP OF FINISH CONCRETE).

NOT TO SCALE

mesa·az

EXPANSION JOINT - TYPICAL

DETAIL NO.
M-111.05

REV. 1/31/2014

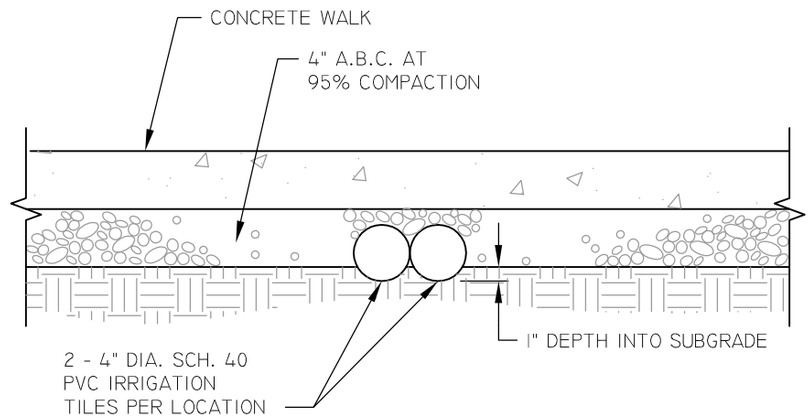

NOTE

1. TILE CUT AT 45° WHERE IT DAYLIGHTS

NOT TO SCALE

mesa·az

TYPICAL WALKWAY WITH 4" IRRIGATION TILES - FLOOD IRRIGATION APPLICATION

DETAIL NO.
M-111.06

REV. 02/12/2015

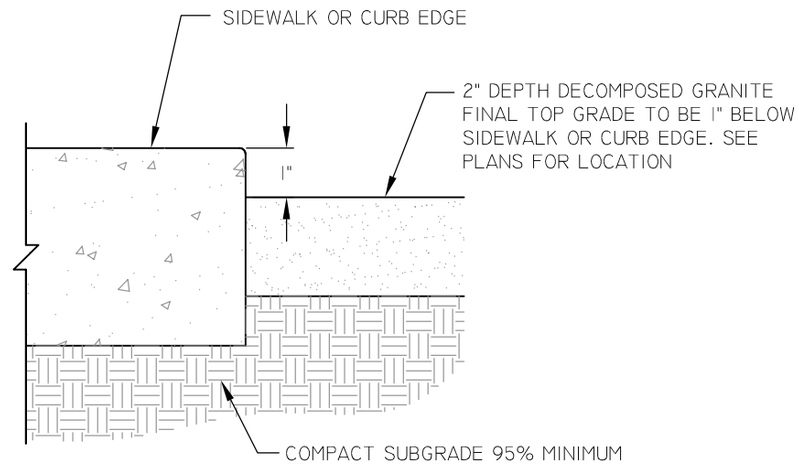

NOTE

CONTRACTOR SHALL INSTALL D.G. AS FOLLOWS:
DECOMPOSED GRANITE GROUND COVER SHALL BE 1/2" SIZE SCREENED AND WASHED. PLACE AND ROLL TO 2" TOTAL DEPTH OVER 85% COMPACTED SUBGRADE. PRE-EMERGENT HERBICIDE SURFLAN, DACTHAL OR APPROVED EQUAL SHALL BE APPLIED BEFORE AND AFTER GRANITE PLACEMENT. (CONTRACTOR SHALL SUBMIT DECOMPOSED GRANITE SAMPLES IN RIGID PLASTIC OR METAL CONTAINERS. PROJECT NUMBER AND SUPPLIER NAME SHALL BE LABELED ON CONTAINER.)

NOT TO SCALE

mesa·az

DECOMPOSED GRANITE AT CONCRETE

DETAIL NO.
M-111.07

REV. 02/12/2015

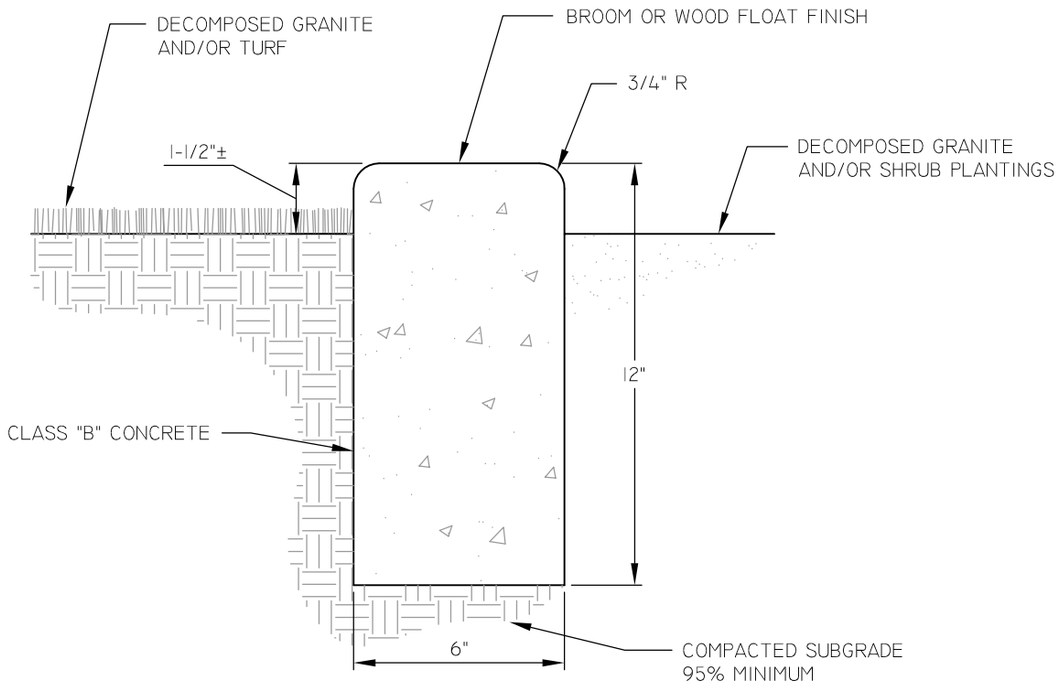

NOTE

1. EXPANSION & CONTRACTION JOINTS AS PER MAG STD. SPECS., CONTRACTION JOINTS @10' O.C. AND EXPANSION JOINTS @ 50' MAX.

NOT TO SCALE

mesa·az

12" CONCRETE HEADER CURB DETAIL

DETAIL NO.
M-111.08

REV. 02/12/2015

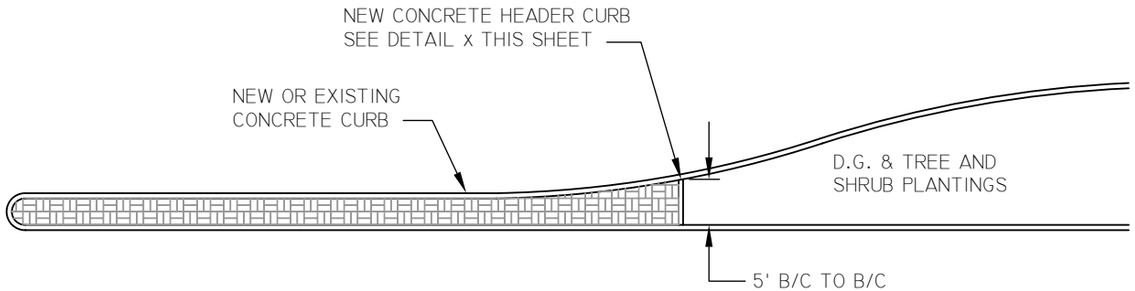

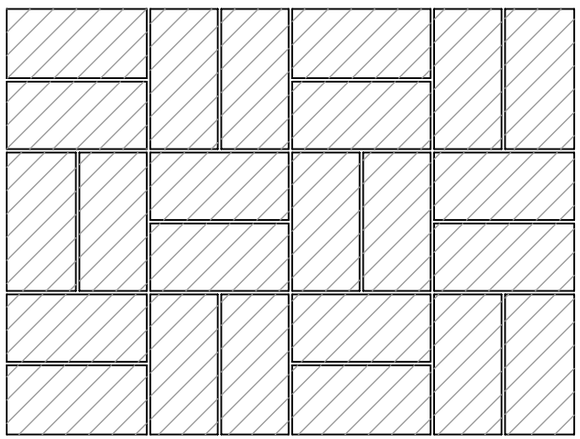

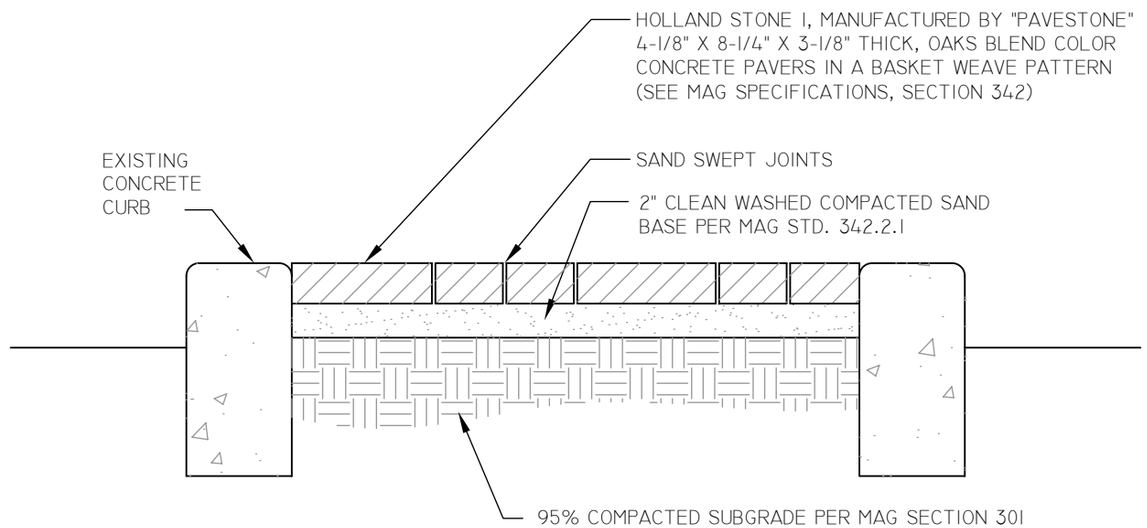

NOTES

1. SHOP DRAWING REQUIREMENT:
   CONTRACTOR TO SUBMIT PAVER MANUFACTURER'S CERTIFICATE LETTER OF COMPLIANCE WITH RELATED PERFORMANCE STANDARDS LISTED.
2. CONTRACTOR SHALL ADJUST ALL EXISTING AND NEW BOXES TO NEW FINISH GRADE OF BRICK PAVERS. (N.P.I.)

NOT TO SCALE

mesa·az

MEDIAN CONCRETE PAVER DETAIL

DETAIL NO.
M-111.09

REV. 01/31/14

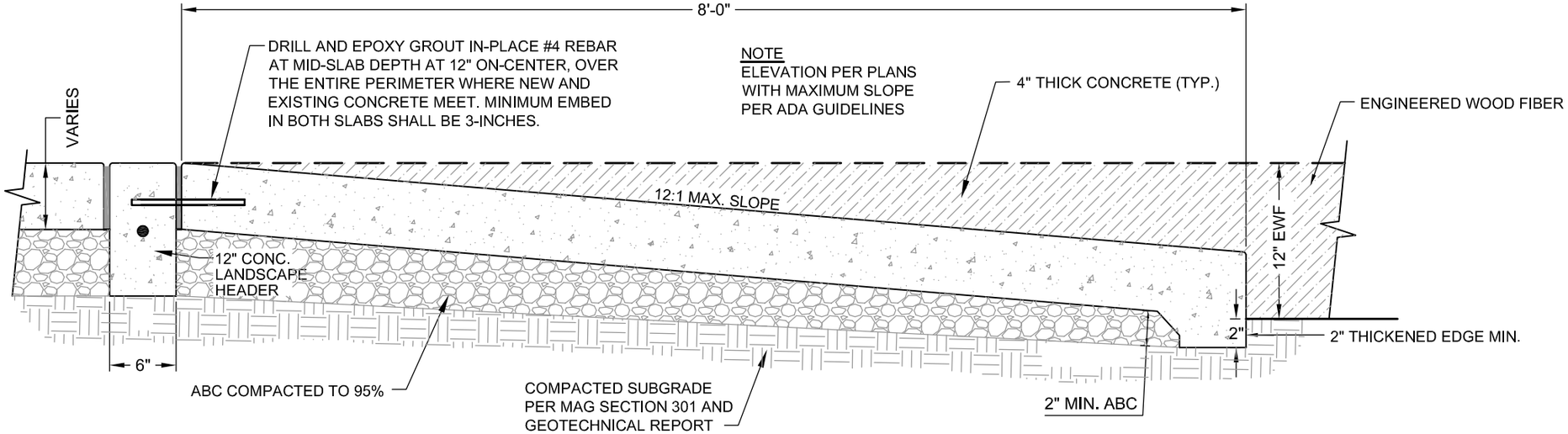

SECTION A

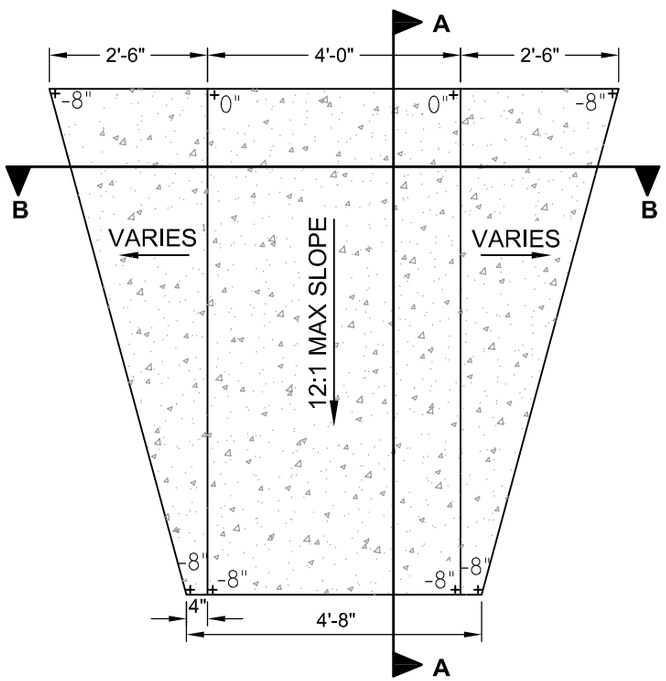

PLAN VIEW

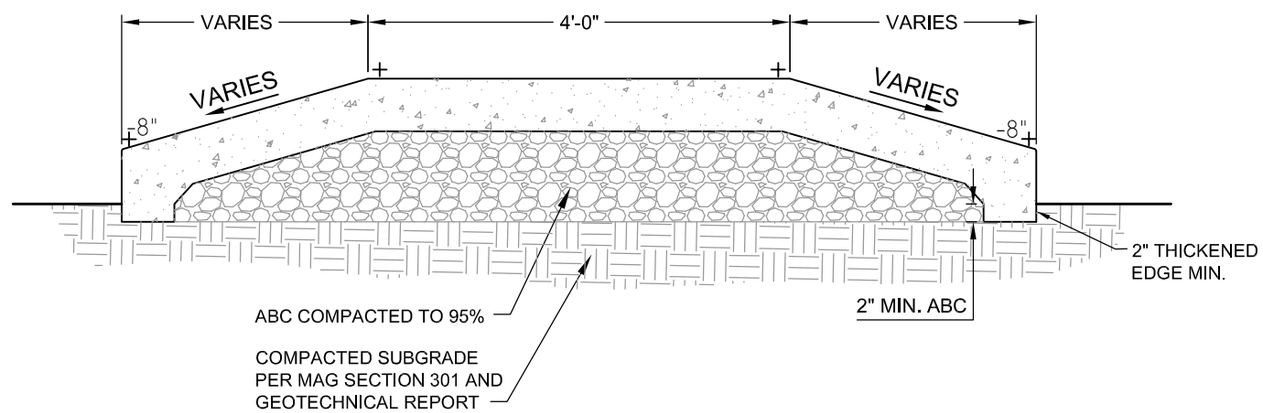

SECTION B

NOT TO SCALE

mesa·az

PLAYGROUND ADA ACCESS RAMP

DETAIL NO.
M-111.10

REV. 02/10/2015